NBD®

北京双利丰科技发展有限公司

Beijing Shuangfengli Technology Co., Ltd.

产品目录

Product catalogue







企业简介 Corporate Profile

Beijing Shuangfengli Technology Co., LTD, founded in 2016, was a factory specialized in production of machine tools and accessories.

The company mainly produces various of spring collet, milling chuck, drill chuck, center, sleeve, boring head, DIN69880 tool post , precision vise, CNC tool systems, HSK holder, all sorts of measuring tools and all kinds of other products,

Products are exported to Italy.

The company has export license from 2019,

Depending on the establishment of the ERP, the company always carry out “Rely on sincerity, Develop on quality ”

Beijing Shuangfengli Technology Co., Ltd.sincerely hopes to establish close business relations with domestic and foreign traders to develop the mutual economic cooperation jointly and promote friendship.























This brochure is constantly updated, some of the company's products have not been written, if there is a need, please consult the sales engineer. Our company can also customize non-standard products for customers.

CATALOGUE 目录

Precision vise 精密虎钳 7
ART vise ART平口钳.....8
Multiflex Series Vises多工位平口钳 14
QKG vise QKG平口钳 15
QGG vise QGG平口钳 15
GT vise GT平口钳 16
Parallel Blocl 平行块.....17
MC Base Plate MC基板 19
Modular quick-change clamping system模块化快换夹持系统..47
Dovetail clip 燕尾装置 56
Vacuum suction cup 真空吸盘 59
Three sided tooling tower三面工装塔.....60
Four sided tooling tower四面工装塔.....61
Three sided pyramid三面金字塔 62
Self-centering vise/5-axis vise自定心虎钳.....63
Double station vise双工位虎钳.....68
Pneumatic self-centering vice气动自定心虎钳 68
ER chuck ER夹头.....69
Chuck with zero positioning 卡盘 70
Disc Self centering vise 圆盘自定心虎钳.....70
Zero point positioning Latin零点定位拉丁 71
L board L板 72
Milling tools铣削刀具.....74
Round nose shell milling cutter圆鼻壳形铣刀.....76
KM45° Face mill 面铣刀盘.....76
MFWN90/MFPN66 Face mill 面铣刀盘 77
TXN/SDMT Face mill 面铣刀盘 78
EXN02 03 End mill 立铣刀杆.....79
BAP right angle shoulder and mill直角立铣刀杆 80
Round nose end mill圆鼻立铣刀 81
Drilling and milling cutter钻铣刀 84
T2139 Copy end fine mill 球形精铣刀杆.....85
Milling fixture铣削夹持具.....86
Nut Mill Chuck普通螺帽刀柄 88
BT Mill chuck BT刀柄 88
NT Mill Chuck 刀柄.....98
SK DAT (JT)Mill Chuck 刀柄 102
HSK Mill Chuck 刀柄 107
Hydraulic Mill Chuck液压刀柄 111

BT30/BT40/BBT40 111
BT40 Slender 细长型高精度液压刀柄....112
CNC Grinding tool fixture数控磨刀机专用夹具 112
BT50/BBT50 113
HSK40E/HSK50E....114
HSK63A....115
HSK100A/SK50....116
SK40/SK50....117
Shrink Fit Mill Chuck热缩刀柄....118
BT 4.5° 118
SK 4.5° 120
CAT 4.5°....121
HSK-A 4.5° 123
HSK-E 4.5° 125
HSK-F 4.5° 126
Chuck SET 127
BT30 Slim From C 薄壁C型....127
BT/SK 3°....128
HSK-A 3° 129
HSK-E 3° 130
Extension Slim 延长杆....130
BT40 Slim From C 薄壁C型....132
HSK-A Slim From C 薄壁C型 136
HSK-E Slim From C 薄壁C型 138
HSK-F Slim From C 薄壁C型 140
Angle Heads角度头....141
C Multi lock Mill Chuck 强力套装刀柄 145
Other Drill Chuck其它钻夹刀柄 146
Nut 螺帽 146
ER Extension ER延长杆....147
Collets 弹性筒夹....148
GSK and OZ Nut 螺帽GSK和OZ....153
Wrench 扳手....154
BT Pull stud 拉钉....155
Spindle taper wiper 主轴清洁棒及锁刀座 159
Z-Axis zero presetter Z 轴设定器 160
Edge finder寻边器....161
Test Arbor 主轴测试棒 162
Clamping Kits 58PCS 组合压板 163
Dynamometer 主轴拉力计....163
Turning Tools 车削刀具....164
External Turning Tool 外圆刀杆 165
Internal Turning Tool 内孔刀杆....184
Tool Holder For Grooving 切断、切槽刀杆 195
Threading Holder 螺纹刀杆....197
Boring Bar 镗刀刀杆....198
Lathe accessories 车床附件 199

Lathe chuck (manual) 车床卡盘（手动）.....200
Two-jaw self-centering chuck 两爪自定心卡盘.....202
Three-jaw self - centering chuck三爪自定心卡盘.....203
Four-jaw self-centering chuck 四爪自定心卡盘.....212
Four-jaw independent chuck 四爪单动卡盘.....214
Five-jaw self-centering chuck 五爪自定心卡盘.....215
Six-jaw self-centering chuck 六爪自定心卡盘.....216
chuck jaw 卡爪.....220
Front three-JAW chuck 前穿式卡盘.....222
Hydraulic chuck 油压夹头.....225
Lathe efficiency accessories车床增效附件.....235
ER Extension (A TYPE.FOR LATHE) 车床用延长杆.....234
Hard jaws AND Soft jaws for hydraulic chucks 液压卡盘爪和生爪.....235
Bar pullers for cnc lathes 数控车床拉料器.....236
Forming circle AND Connecting plate 成型圈和连接盘.....237
American style Quick change tool posts美式快换刀架.....238
European style Quick change tool posts欧式快换刀架.....242
Italian style Quick change tool posts意式快换刀架.....245
VDI Tool Holder 刀座.....247
BMT Tool Holder 刀座.....270
Lathe turret tool holde 刀塔刀座.....271
BMT power tool holder BMT动力刀座.....275
BMT fixed tool holder BMT固定刀座.....287
Clamping tool holder 抱紧式刀座.....291
MAZAK Reduction sleeve 马扎克刀套.....291
Oil circuit guide sleeve 油路刀套.....291
CNC Lathe auxiliary tool holder 车床辅助刀座.....292
Extension holder 车床延伸刀座.....293
Double station tool holder 双工位刀座.....293
L-shaped row tool holder L型排刀刀座.....294
Turning tool pressing block 压块.....295
Clamping type tool sleeve 抱紧式刀套.....295
CNC Lathe tool sleeve 车床刀套.....296
Internally cooled guide sleevee 内冷导套.....296
Carbide Center硬质合金顶尖.....297
Bull Nose Center伞形顶尖.....297
High speed water proof回转顶针.....298
Boring tools 孔加工刀具.....299
TDR Disposable rapid drilling tools快速钻头.....300
QSD Disposable rapid drilling tools快速钻头.....303
Modular Drill 皇冠钻.....307
NBJ16 Fine tuning bore system微调精镗孔系统.....318
NBH2084 Fine tuning bore system微调精镗孔系统.....319
J46Reversible Tapping Chuck可逆攻丝夹头.....320
Tool Tester 便携式预检测刀摆仪.....322
Thread rolling tool 螺纹滚压工具.....324

Axial thread rolling head 轴向螺纹滚压头 326
Tangential thread rolling head 切向螺纹轧制头 328
FT knurling tool FT滚花工具.....329
Miniature thread rolling tool 小型螺纹滚压工具 331

NBD®

精密组合虎钳
Precision vise



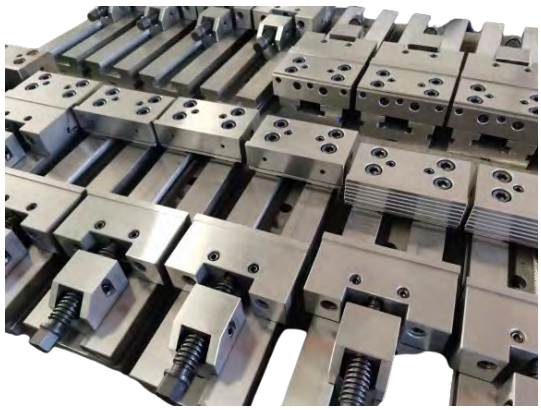



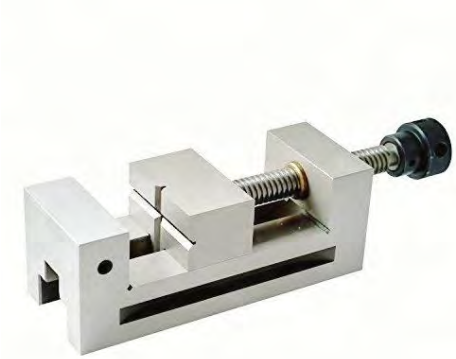



ART.1

标准平口钳
STANDARD VISES

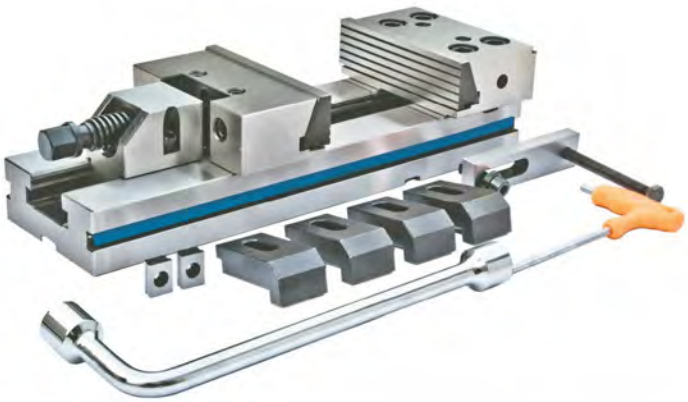

ART.2

标准平口钳（配圆转盘）
STANDARD VISES WITH SWIVEL



ART.2

(ART. 1 + ART. 105)

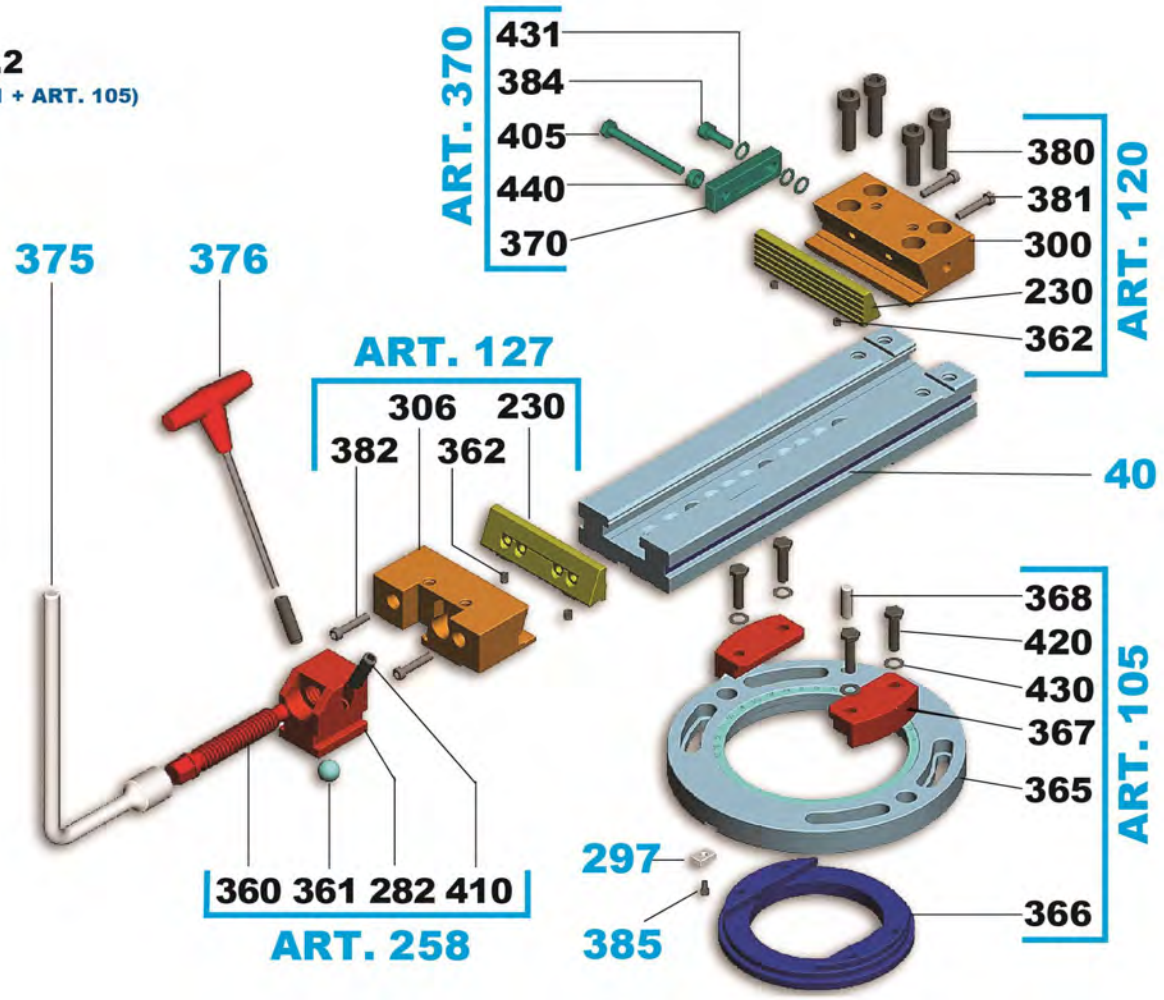

ART.1

标准平口钳
STANDARD VISES

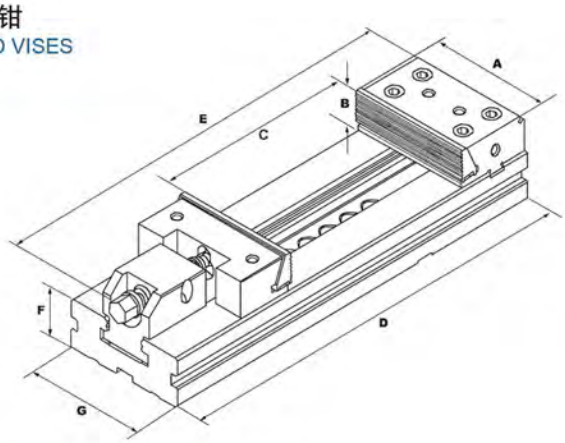

钳口对机床工作台垂直度 50:0.02，采用优质合金钢制造，表面硬化处理，硬度 HRC58-62，用于数控机床，加工中心及通用机床的铣、镗、钻及磨削。

Perpendicularity of vise jaw and work table is 50:0.02. Made of high quality alloy steel, the case hardness is HRC 58-62. Suitable for milling, boring, drilling and grinding on CNC machine, machining centre and ordinary machines.

技术参数 TABLE DIMENSION

单位：mm

规格型号	钳口宽 A JAW WIDTH	钳口高 B JAW HEIGHT	开口度 C JAW OPEN	钳体长 D BASE LENGTH	整钳长 E VISE LENGTH	钳体高 F BASE HEIGHT	钳体宽 G BASE WIDTH	重量 KG VISE WEIGHT
ART.1-1×100	100	30	100	270	320	35	75	7
ART.1-2×150	125	40	150	345	402	40	95	13
ART.1-3×200	150	50	200	420	500	50	125	26
ART.1-3×300			300	520	600			29
ART.1-4×200	175	60	200	455	530	58	145	37
ART.1-4×300			300	555	630			42
ART.1-4×400			400	655	730			47
ART.1-4×500			500	755	830			52
ART.1-5×200	200	65	200	495	580	70	170	64
ART.1-5×300			300	595	680			69
ART.1-5×400			400	695	780			74
ART.1-5×500			500	795	880			79
ART.1-5×600			600	895	980			84
ART.1-6×200	300	80	200	535	630	78	195	95
ART.1-6×300			300	635	730			105
ART.1-6×400			400	735	830			115
ART.1-6×500			500	835	930			125
ART.1-6×600			600	935	1030			135
ART.1-6×700			700	1035	1130			145
ART.1-6×800			800	1135	1230			155

ART.102

动钳组件
MOVABLE JAW SECTION

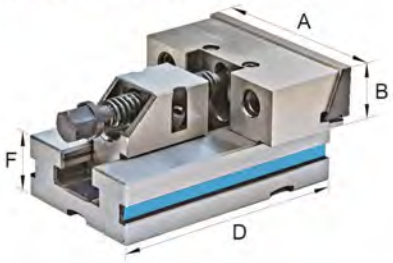

技术参数 TABLE DIMENSION 单位：mm

规格型号	钳口宽 A JAW WIDTH	钳口高 B JAW HEIGHT	钳体长 D BASE LENGTH	钳体高 F BASE HEIGHT	重量 KG VISE WEIGHT
ART.102-1	100	30	140	35	3.4
ART.102-2	125	40	160	40	6.3
ART.102-3	150	50	230	50	14.2
ART.102-4	175	60	240	58	20.8
ART.102-5	200	65	300	70	35
ART.102-6	300	80	350	78	60

ART.103

定钳组件
FLXED JAW SECTION

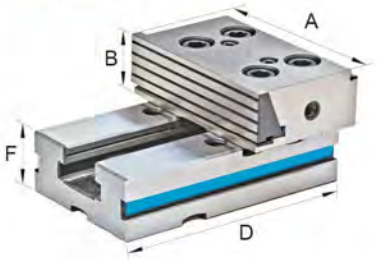

技术参数 TABLE DIMENSION 单位：mm

规格型号	钳口宽 A JAW WIDTH	钳口高 B JAW HEIGHT	钳体长 D BASE LENGTH	钳体高 F BASE HEIGHT	重量 KG VISE WEIGHT
ART.103-1	100	30	140	35	3.3
ART.103-2	125	40	160	40	5.8
ART.103-3	150	50	230	50	12.6
ART.103-4	175	60	240	58	17.8
ART.103-5	200	65	300	70	29.8
ART.103-6	300	80	350	78	50.5

ART.104

双向定钳组件
DOUBLE FIXED JAW SECTION

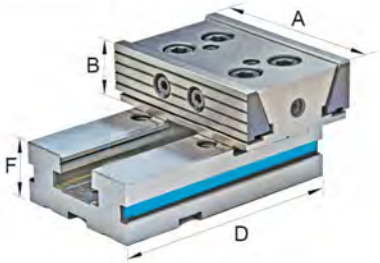

技术参数 TABLE DIMENSION 单位：mm

规格型号	钳口宽 A JAW WIDTH	钳口高 B JAW HEIGHT	钳体长 D BASE LENGTH	钳体高 F BASE HEIGHT	重量 KG VISE WEIGHT
ART.104-1	100	30	140	35	3.4
ART.104-2	125	40	160	40	6
ART.104-3	150	50	230	50	13.3
ART.104-4	175	60	240	58	18.8
ART.104-5	200	65	300	70	30
ART.104-6	300	80	350	78	52.5

短钳系列平口钳可在机床工作台上任意组合，满足加工尺寸较大工件的需要。可组装成单向夹紧方式或双向夹紧方式。

Modular elements are a solution for **big workpiece** with the many reference points available , and a perfect complement or alternative to single or double vises.

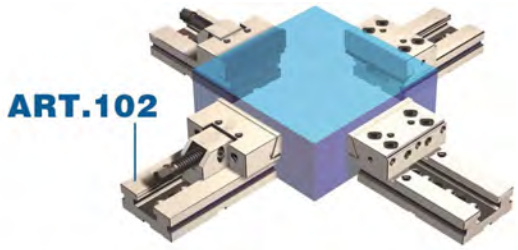

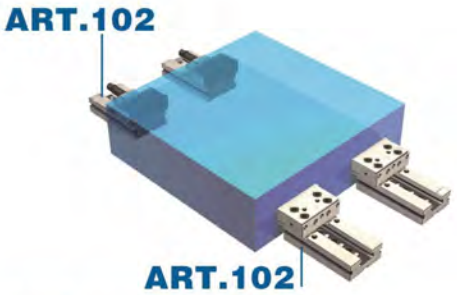

四件动钳组件，将较大工件压紧于机床工作台上。Huge workpiece clamped on the machine table

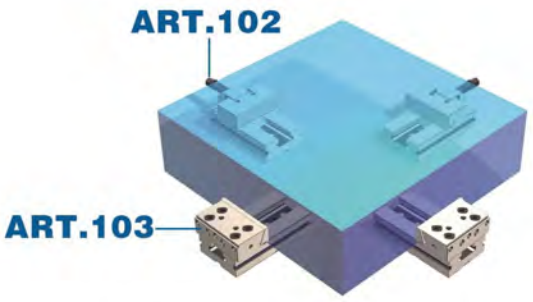

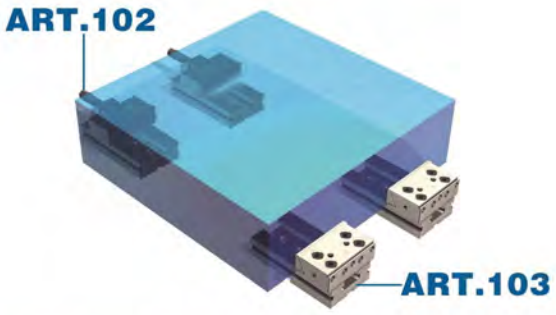

动钳组件与定钳组件配合使用，将工件压紧于钳体面上。Medium size workpiece clamped on the vise section

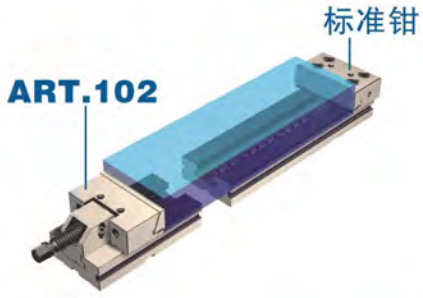

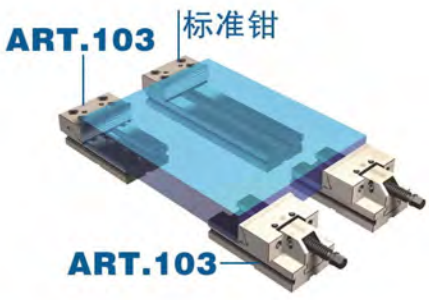

动钳组件与标准钳配合使用。In order to get a movable vise section it is enouth to remove from vise Art.1

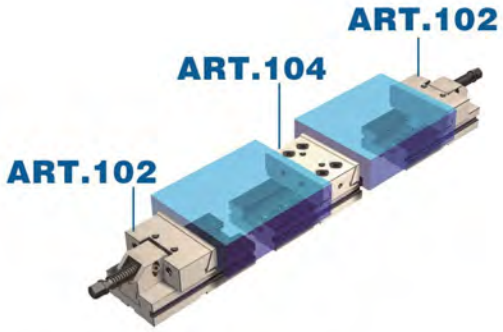

动钳口组件与双向定钳口组件配合使用。

Double fixed vise section + 2 movable vises section

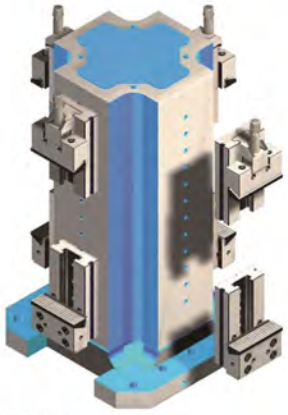

定动钳组件与方箱配合使用。

Modular elements assembled on cross cube

长钳系列平口钳

XL VISES SERIES

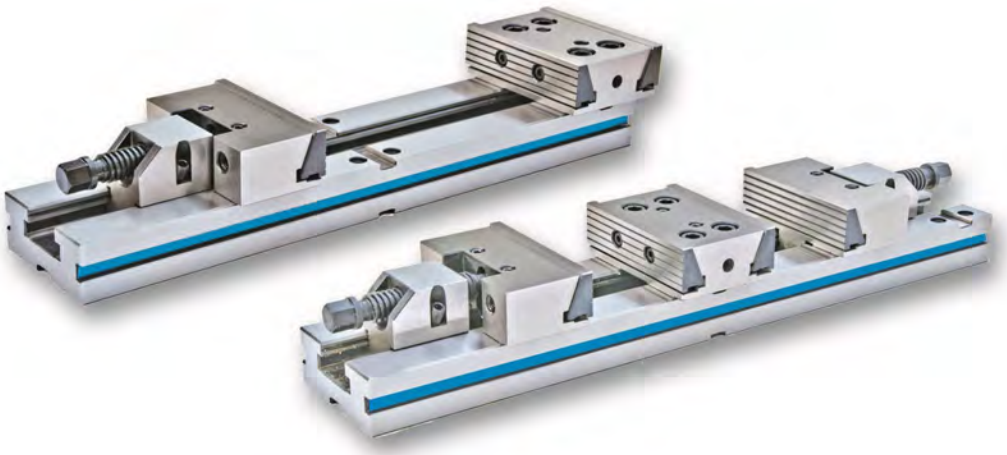

短钳系列平口钳

MODULAR ELEMENTS

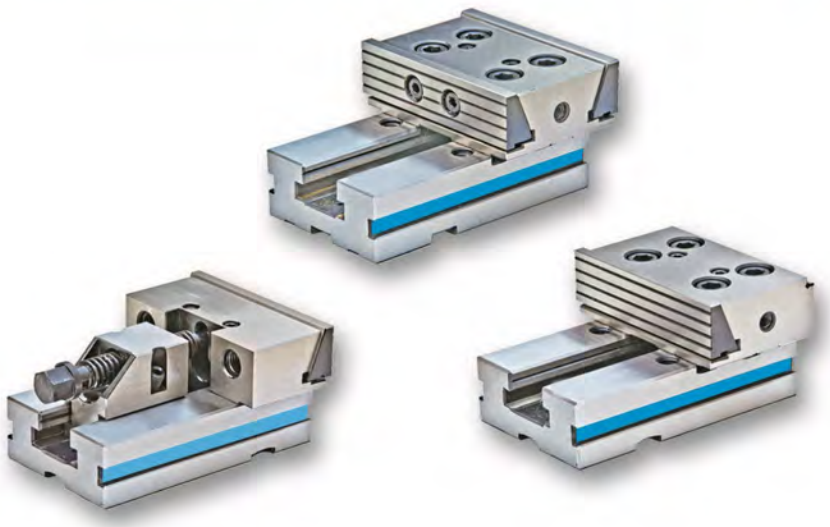

ART.20

单向夹紧长钳
SINGLE LARGE OPENING



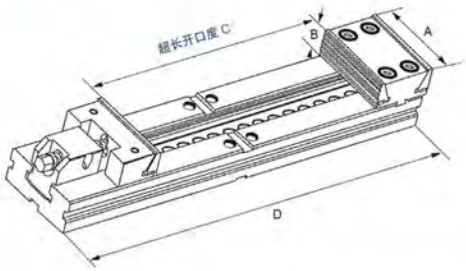

技术参数 TABLE DIMENSION　　单位：mm

规格型号	钳口宽 A JAW WIDTH	钳口高 B JAW HEIGHT	开口度 C JAW OPEN	钳体长 D BASE LENGTH	重量 KG VISE WEIGHT
ART.20-1×290	100	30	290	460	10
ART.20-2×320	125	40	320	520	17
ART.20-3×360	150	50	360	580	31
ART.20-3×460			460	680	34
ART.20-4×400	175	60	400	666	46
ART.20-4×500			500	766	51
ART.20-4×600			600	866	56
ART.20-4×700			700	966	61
ART.20-5×500	200	65	500	805	85
ART.20-5×600			600	905	92
ART.20-5×700			700	1005	99
ART.20-5×800			800	1105	106
ART.20-5×900			900	1205	113
ART.20-6×500	300	80	500	900	127
ART.20-6×600			600	1000	137
ART.20-6×700			700	1100	147
ART.20-6×800			800	1200	157

ART.30

双向夹紧长钳
DOUBLE OPENING



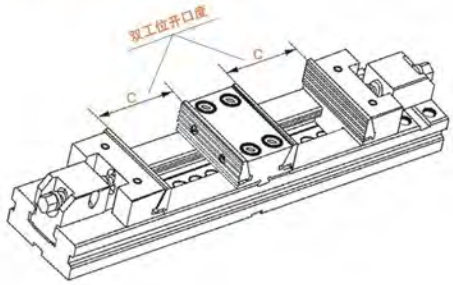

技术参数 TABLE DIMENSION　　单位：mm

规格型号	钳口宽 A JAW WIDTH	钳口高 B JAW HEIGHT	开口度 C JAW OPEN	钳体长 D BASE LENGTH	重量 KG VISE WEIGHT
ART.30-1×90	100	30	90	460	14
ART.30-2×100	125	40	100	520	20
ART.30-3×110	150	50	110	580	38
ART.30-3×160			160	680	42
ART.30-4×120	175	60	120	666	58
ART.30-4×170			170	766	63
ART.30-4×220			220	866	68
ART.30-4×270			270	966	73
ART.30-5×150	200	65	150	805	95
ART.30-5×200			200	905	101
ART.30-5×250			250	1005	107
ART.30-5×300			300	1105	113
ART.30-5×350			350	1205	119
ART.30-6×160	300	80	160	900	155
ART.30-6×210			210	1000	163
ART.30-6×260			260	1100	171
ART.30-6×310			310	1200	179

长钳系列平口钳是一种二合一的平口钳，可作单向钳用（超长开口度），也可作双向钳用（双工位开口度），为用户节约开支，增强加工能力。

XL vises enable to have 2 vises in 1 because they can quickly change from **double vise** to **single vise** with very large opening.

SL系列多工位平口钳
MULTIFLEX VISES





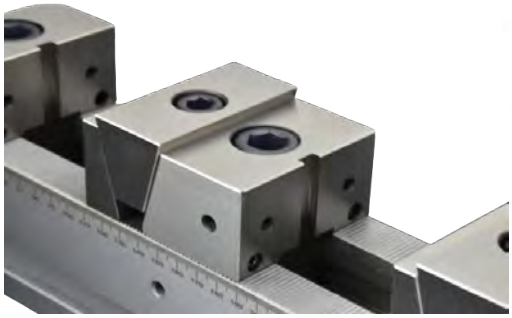

数据图 DATA MAP

单位/UNIT：mm

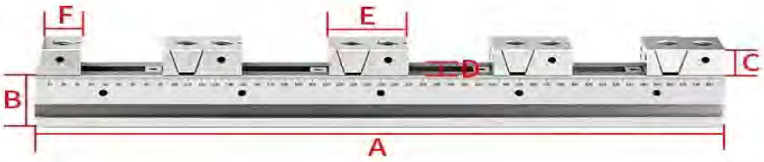

型号 Cat No	A	B	C	D	E	F	STATION No
SL-3050	300	50	25	50	55	30	2工位
SL-4050	400	50	25	50	55	30	2工位
SL-5050	500	50	25	50	55	30	4工位
SL-6050	600	50	25	50	55	30	4工位
SL-7050	700	50	25	50	55	30	4工位
SL-4072	400	75	43	72	80	50	2工位
SL-5072	500	75	43	72	80	50	4工位
SL-6072	600	75	43	72	80	50	4工位
SL-7072	700	75	43	72	80	50	4工位
SL-40100	400	72	43	100	92	50	2工位
SL-50100	500	72	43	100	92	50	4工位
SL-60100	600	72	43	100	92	50	4工位
SL-70100	700	72	43	100	92	50	4工位

夹持可扩种规格表 Clamping can plant expanding specification table

单位/UNIT：mm

型号MODEL										standard
SL3050	203	71	27	-	-	-	-	-	-	2
SL4050	303	121	60	30	-	-	-	-	-	2
SL5050	403	171	94	55	32	16	-	-	-	4
SL6050	503	221	127	80	52	33	-	-	-	4
SL7050	603	271	160	105	72	50	34	22	13	4
SL4072	269	93	35	-	-	-	-	-	-	2
SL5072	369	143	68	30	-	-	-	-	-	4
SL6072	469	193	101	55	-	-	-	-	-	4
SL7072	569	243	135	80	48	26	-	-	-	4
SL40100	258	82	24	-	-	-	-	-	-	2
SL50100	358	132	57	19	-	-	-	-	-	4
SL60100	458	182	90	44	17	-	-	-	-	4
SL70100	558	232	124	69	37	-	-	-	-	4

QGG/QKG 精密工具平口钳
QGG/QKG PRECISION TOOL VISES

QGG精密工具平口钳 THE PRECISION TOOL VISES

1. 采用优质合金钢渗碳处理，工作面硬度HRC58～62
2. 平行度0.005mm/100mm，垂直度0.005mm
3. 夹紧快，操作灵活
4. 用于精密测量和检查，精密磨削及电火花
5. 在工作时无论横立、竖立、平放皆可保持高的精密度

Produced of high quality steel, carburized towsurface hardness: HRC58～62

Parallelism 0.005mm/100mm, squareness 0.005mm

Quickly to clamp and easy to operate

Used for precision measurement and inspectionprecision grinding, EDM and wire-cutting machine Guarantee high accuracy in any position

QGG 系列精密工具平口钳
PRECISION TOOL VISES

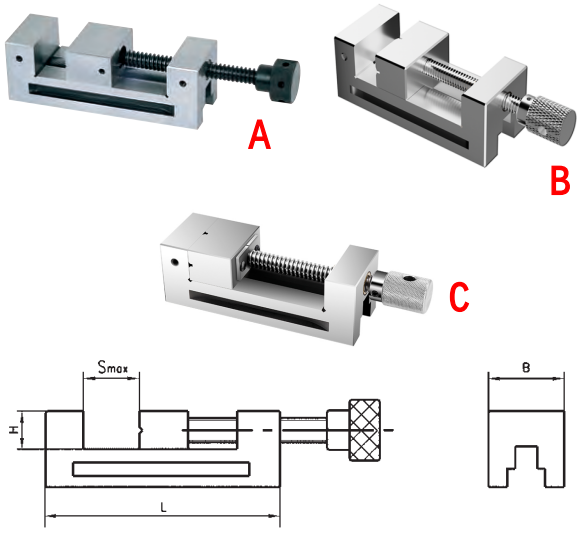

型号 Cat.No	B mm	H mm	Smax mm	L mm	重量 Wt(kg)
QGG50	50	25	65	155	3.0
QGG60	60	25	55	110	2.4
QGG63	63	32	85	190	3.8
QGG73	73	35	100	210	5.0
QGG80	80	40	100	220	6.5
QGG88	88	40	125	250	11.0
QGG100	100	45	125	260	13.0
QGG125	125	50	160	300	19.5
QGG125A	125	50	210	350	23.0
QGG150	150	50	175	315	23.8

QKG 系列精密工具平口钳
PRECISION TOOL VISES

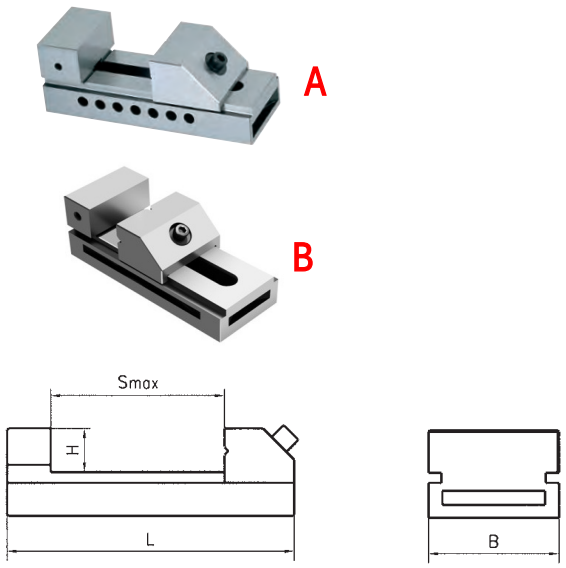

型号 Cat.No	B mm	H mm	Smax mm	L mm	重量 Wt(kg)
QKG25	26	9.15	22	65.4	0.5
QKG36	36	20	40	100	1.2
QKG38	38	20	44	105	1.3
QKG50	50	25	65	140	2.0
QKG63	63	32	85	175	3.0
QKG73	73	35	100	190	4.1
QKG80	80	40	100	200	5.5
QKG88	88	40	125	235	7.3
QKG100	100	45	125	245	10.0
QKG125	125	50	160	285	18.0
QKG150	150	50	200	330	21.5
QKG150A	150	50	250	380	23.0
QKG150B	150	50	300	430	24.0

GT精密组合平口钳
PRECISION MODULAR VISES

GT精密组合平口钳 PRECISION MODULAR VISES

1. 采用优质合金钢渗碳处理，工作面硬度HRC58～62
2. 平行度0.005mm/100mm,垂直度0.005mm
3. 具有可拆换底座、固定钳口、活动钳口，夹紧快，操作方便
4. 广泛用于加工中心等精密机床

1. Produced of high quality steel, carburized to surface hardness: HRC58～62
2. Parallelism 0.005mm/100mm,squareness 0.005mm
3. It have interchangeable base,fixed/movable jawsit is quickly to clamp and easy to operate
4. It is widely used on machining center and other precision machine tools



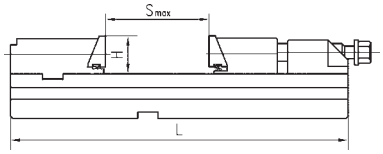

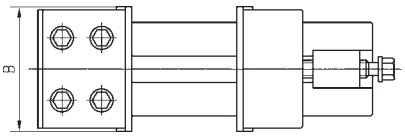

型号 Cat.No	B mm	H mm	Smax mm	L mm	最大夹紧力(Kg) Clamping force
GT100	100	30	100	270	3000
GT125	125	40	150	345	3000
GT150A	150	50	200	420	5000
GT150B	150	50	300	520	5000
GT150C	150	50	400	620	5000
GT175A	175	60	200	455	6000
GT175B	175	60	300	555	6000
GT175C	175	60	400	655	6000
GT175D	175	60	500	755	6000
GT175E	175	60	600	855	6000
GT200A	200	65	200	495	10000
GT200B	200	65	300	595	10000
GT200C	200	65	400	695	10000
GT200D	200	65	500	795	10000
GT200E	200	65	600	895	10000
GT300A	300	80	200	535	12000
GT300B	300	80	300	635	12000
GT300C	300	80	400	735	12000
GT300D	300	80	500	835	12000
GT300E	300	80	600	935	12000
GT300F	300	80	700	1035	12000
GT300G	300	80	800	1135	12000

平行块系列 PARALLEL BLOCK SERIES

PB150 型平行块 PRECISION PARALLEL BLOCK

1.硬度：HRC55～62
2.精度：0.01mm
3.平行度：0.005mm

1.Hardeness：HRC55～62
2.Accuracy：0.01mm
3.Parallelism：0.005mm



型号 Cat No	规格 L×W×H	件数 Pcs
PB150—1	150×10×14(16,18,20,22,24,26,28,30,32,35,40,45,50)	14×2
PB150—2	150×8×14(16,18,20,22,24,26,28,30,32,35,40,45,50)	14×2
PB150—3	80×4×14(16,18,20,22,24,26,28,30,32,35,40,45,50)	14×2
PB150—4	200×10×14(16,18,20,22,24,26,28,30,32,35,40,45,50)	14×2

PB151 型平行块 PRECISION PARALLEL BLOCK

1.硬度：HRC55～62
2.精度：0.01mm
3.平行度：0.005mm

1.Hardeness：HRC55～62
2.Accuracy：0.01mm
3.Parallelism：0.005mm



型号 Cat No	规格 L×W×H	件数 Pcs
PB151—1	100×4×10(14,18,22,26,30,34,38,42,)	9×2
PB151—2	160×4×10(14,18,22,26,30,34,38,42,)	9×2
PB151—3	150×8.5×14(16,20,24,30,32,36,40,44)	9×2
PB151—4	150×10×14(16,20,24,30,32,36,40,44)	9×2

PB153 型平行块 PRECISION PARALLEL BLOCK

1.硬度：HRC55～62
2.精度：0.01mm
3.平行度：0.005mm

1.Hardeness：HRC55～62
2.Accuracy：0.01mm
3.Parallelism：0.005mm



型号 Cat No	规格 L×W×H	件数 Pcs
PB153—1	125×8×11(16,21,26,31,36) 125×10×13(18,23,28,33,38) 125×12×15(20,25,30,35,40) 125×14×17(22,27,32,37,42)	24×2
PB153—2	150×8×11(16,21,26,31,36) 150×10×13(18,23,28,33,38) 150×12×15(20,25,30,35,40) 150×14×17(22,27,32,37,42)	24×2

平行块系列 PARALLEL BLOCK SERIES

PB154 型平行块 PRECISION PARALLEL BLOCK

1.硬度：HRC55～62
2.精度：0.01mm
3.平行度：0.005mm

1.Hardeness：HRC55～62
2.Accuracy：0.01mm
3.Parallelism：0.005mm



型号 Cat No	规格 L×W×H	件数 Pcs
PB154–1	150×8×16(18,20,22,24,26,28,30,32,34,36,38,40,42,44,46,48,50)	18×2
PB154–2	150×8×17(19,21,23,25,27,29,31,33,35,37,39,41,43,45,47,49,51)	18×2

PB155 型平行块 PRECISION PARALLEL BLOCK

1.硬度： HRC55～62
2.精度： 0.01mm
3.平行度： 0.005mm

1.Hardeness：HRC55～62
2.Accuracy：0.01mm
3.Parallelism：0.005mm



型号 Cat No	规格 L×W×H	件数 Pcs
PB155–1	120×10×14(16,18,20,22,24,26,28,30,32,35,40)	12×2
PB155–2	150×10×14(16,18,20,22,24,26,28,30,32,35,40)	12×2

PB156型平行块 PRECISION PARALLEL BLOCK

1. 硬度：HRC55～62
2. 精度：0.01mm
3. 平行度：0.005mm

1. Hardness：HRC55～62
2. Accuracy：0.01mm
3. Parallelism：0.005mm



型号 Cat No	规格 L×W×H	件数 Pcs
PB156–1	120X8X12(17,22,25,28,32,36,38)	8X2
PB156–2	160X8X12(17,22,25,28,32,36,38)	
PB156–3	200X8X17(22,26,28,32,36,38,42)	

BP01

MC基板
M/C BASE PLATE



材质：HT250/QT500
热处理：退火　硬度HB190-240
用处：适用于立式MC
优点：可根据实际需要，自行钻孔加工制作专用冶具

Material: Cast Iron HT250/QT500
Heat treated (Normalized)
Application: Vertical Machining Center.
Features: Ready to accept a hole pattern for your special jig.

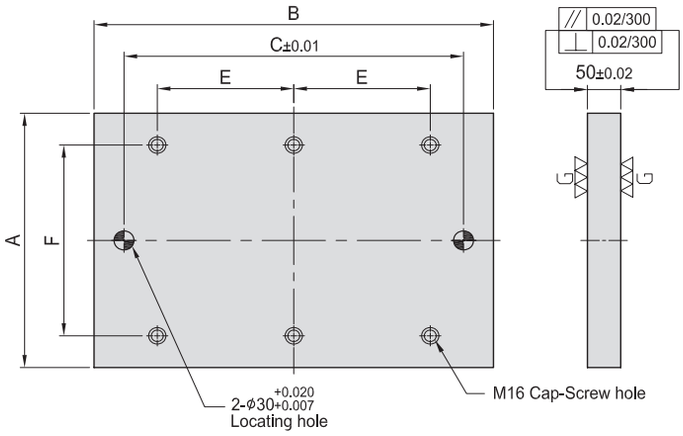

MODEL NO.	A	B	C	E	F	kg
BP01-50400-0600	400	600	–	–	–	88
BP01-50500-0600	500					106
BP01-50600-0600	600					127
BP01-50400-0800	400	800	–	–	–	113
BP01-50450-0900	450	900				142
BP01-50500-1000	500	1000	–	–	–	176
BP01-50600-1200	600	1200				256

*Special Design Welcome !

BP02

MC基板 M/C BASE PLATE



材质：HT250/QT500
热处理：退火
用处：适用于立式MC
优点：以孔定位方式，利用标准化治具零件，可以快速组合成一套符合需求的治具。

Material:Cast Iron HT250/QT500
Heat treated(Normalized)
Application: Vertical Machining Center.
Features: Alignment bushing & thread insert at every holelocation, easily adapts to standardized jig components.

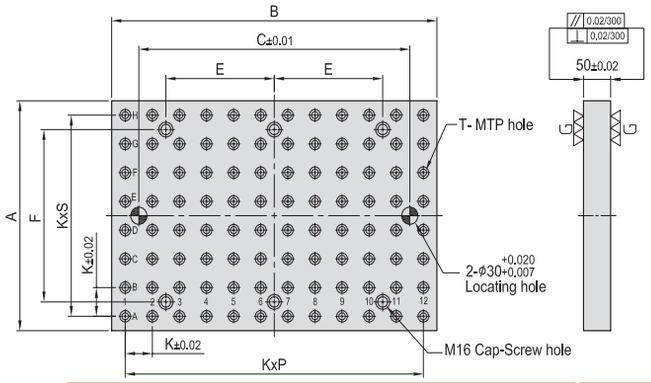

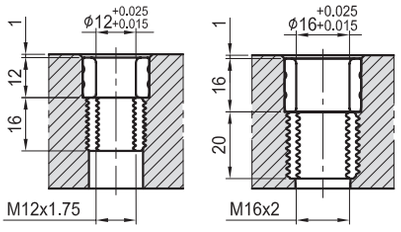

Figure T

MODEL NO.	A	B	C	E	F	T		K	P	S	MTP	kg
BP02-50400-0600-12	400	600	–	–	–	Ø12	M12	50	11	7	96	90
BP02-50500-0600-12	500									9	120	112
BP02-50600-0600-12	600									11	144	134
BP02-50400-0800-12	400	800	–	–	–	Ø12	M12	50	15	7	128	109
BP02-50450-0900-12	450	900							17	8	158	138
BP02-50500-1000-12	500	1000	–	–	–	Ø12	M12	50	19	9	200	165
BP02-50600-1200-12	600	1200							23	11	288	244

MODEL NO.	A	B	C	E	F	T		K	P	S	MTP	kg
BP02-50400-0600-16	400	600	–	–	–	Ø16	M16	50	11	7	96	89
BP02-50500-0600-16	500									9	120	108
BP02-50600-0600-16	600									11	144	120
BP02-50400-0800-16	400	800	–	–	–	Ø16	M16	50	15	7	128	108
BP02-50450-0900-16	450	900							17	8	158	134
BP02-50500-1000-16	500	1000	–	–	–	Ø16	M16	50	19	9	200	164
BP02-50600-1200-16	600	1200							23	11	288	240

*Special Design Welcome !

BP03

MC基板 M/C BASE PLATE



材质：HT250/QT500
热处理：退火
用处：适用于立式MC
优点：以T型槽定位方式，利用标准化治具零件，可以快速组合完成一套符合需求的治具。

Material: Cast Iron HT250/QT500
Heat treated: Normalized
Application: Vertical Machining Center.
Features: T-Slots running in 2 directions, easily adapts to standardized jig components.

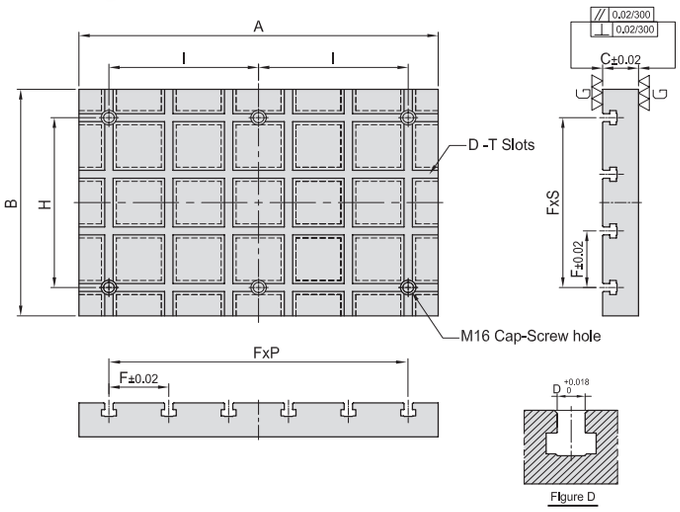

MODEL NO.	A	B	C	D	F	P	S	H	I	kg
BP03-60400-0600-14	600	400	60	14	100	5	3	–	–	92
BP03-60500-0600-14		500					4			115
BP03-60600-0600-14		600					5			130
BP03-60400-0800-14	800	400	60	14	100	7	3	–	–	117
BP03-60450-0900-14	900	450				8				168
BP03-60500-1000-14	1000	500	60	14	100	9	4	–	–	198
BP03-60600-1200-14	1200	600				11	5			264

MODEL NO.	A	B	C	D	F	P	S	H	I	kg
BP03-75400-0600-18	600	400	75	18	100	5	3	–	–	118
BP03-75500-0600-18		500					4			147
BP03-75600-0600-18		600					5			173
BP03-75400-0800-18	800	400	75	18	100	7	3	–	–	151
BP03-75450-0900-18	900	450				8				182
BP03-75500-1000-18	1000	500	75	18	100	9	4	–	–	228
BP03-75600-1200-18	1200	600				11	5			329

BP04

MC基板 M/C BASE PLATE



材质：HT250/QT500
热处理：退火
用处：适用于卧式MC
优点：可根据实际需求，自行钻孔加工制作专用治具。

Material: Cast Iron HT250/QT500
Heat treated (Normalized)
Application: Horizontal Machining Center.
Features: Ready to accept a hole pattern for your special jig.

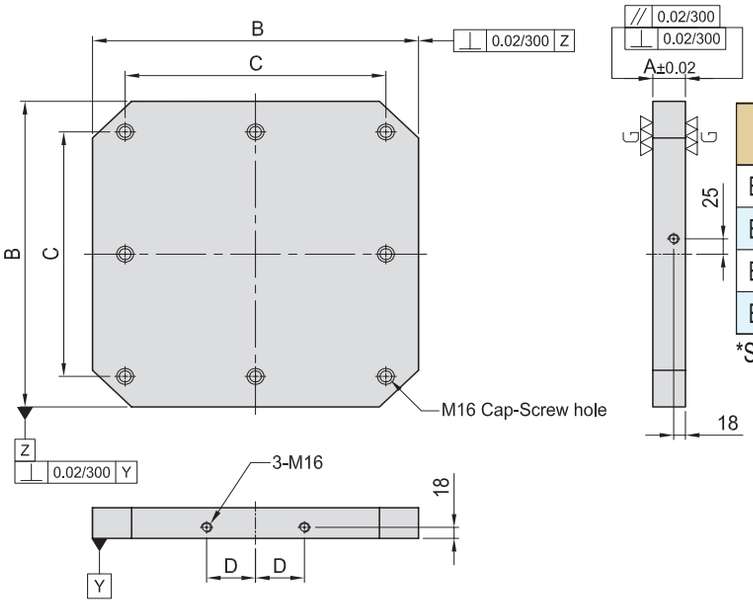

MODEL NO.	A	B	C	D	Mounting holes	kg
BP04-50400-0400	50	400	320	55	4	57
BP04-50500-0500	50	500	400	75	8	88
BP04-50630-0630	50	630	500	100	8	140
BP04-50800-0800	50	800	640	135	8	225

*Special Design Welcome !



BP05

MC基板 M/C BASE PLATE

材质：HT250/QT500
热处理：退火
用处：适用于卧式MC
优点：以孔定位方式，利用标准化治具零件，可以快速组合成一套符合需求的治具。

Material:Cast Iron HT250/QT500
Heat treated(Normalized)
Application: Horizontal Machining Center.
Features: Alignment bushing & thread insert at every holelocation, easily adapts to standardized jig components.

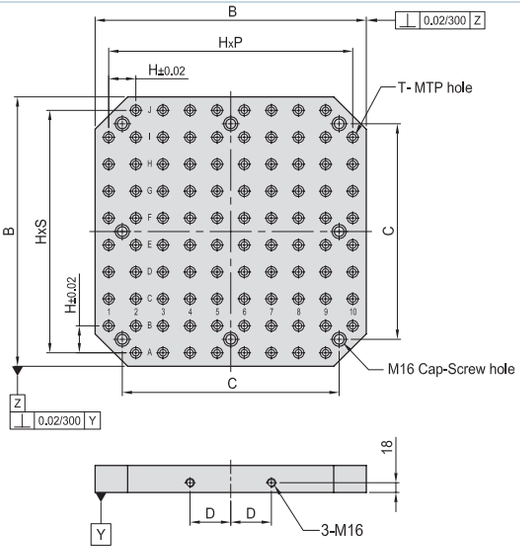

MODEL NO.	A	B	C	D	T		H	P	S	MTP	Mounting holes	kg
BP05-50400-0400-12	50	400	320	55	Ø12	M12	50	7	7	59	4	54
BP05-50500-0500-12		500	400	75				9	9	93	8	83
BP05-50630-0630-12	50	630	500	100	Ø12	M12	50	11	11	139	8	135
BP05-50800-0800-12		800	640	135				15	15	237		206
BP05-50400-0400-16	50	400	320	55	Ø16	M16	50	7	7	59	4	52
BP05-50500-0500-16		500	400	75				9	9	93	8	80
BP05-50630-0630-16	50	630	500	100	Ø16	M16	50	11	11	139	8	130
BP05-50800-0800-16		800	640	135				15	15	237		204

*Special Design Welcome !

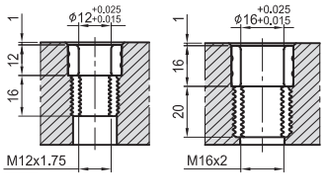

Figure T

BP06



MC基板M/C BASE PLATE

材质：HT250/QT500
热处理：退火
用处：适用于卧式MC
优点：以T型槽定位方式，利用标准化治具零件，可以快速组合完成一套符合需求的治具。

Material:Cast Iron HT250/QT500
Heat treated(Normalized)
Application: Horizontal Machining Center.
Features:T-Slots running in 2 directions, easily adapts tostandardized jig components.

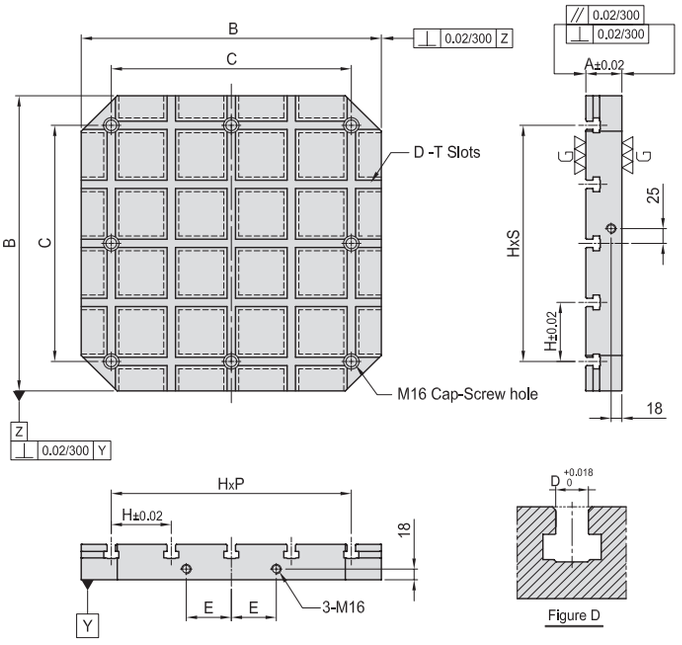

Figure D

MODEL NO.	A	B	C	D	E	H	P	S	Mounting holes	kg
BP06-60400-0400-14	60	400	320	14	55	80	4	4	4	56
BP06-60500-0500-14		500	400		75	100			8	90
BP06-60630-0630-14	60	630	500	14	100	125	4	4	8	150
BP06-60800-0800-14		800	640		135	160				230
BP06-75400-0400-18	75	400	320	18	55	80	4	4	4	68
BP06-75500-0500-18		500	400		75	100			8	108
BP06-75630-0630-18	75	630	500	18	100	125	4	4	8	180
BP06-75800-0800-18		800	640		135	160				295

*Special Design Welcome !



BP07

MC四面基座
SQUARE TOOLING COLUMN

材质：HT250/QT500
热处理：退火
用处：适用于卧式MC
优点：可以根据实际需求，自行钻孔加工制作专用治具。

Material:Cast Iron HT250/QT500
Heat treated(Normalized)
Application: Horizontal Machining Center.
Features: Ready to accept a hole pattern for your sEye bolt & top cover included.

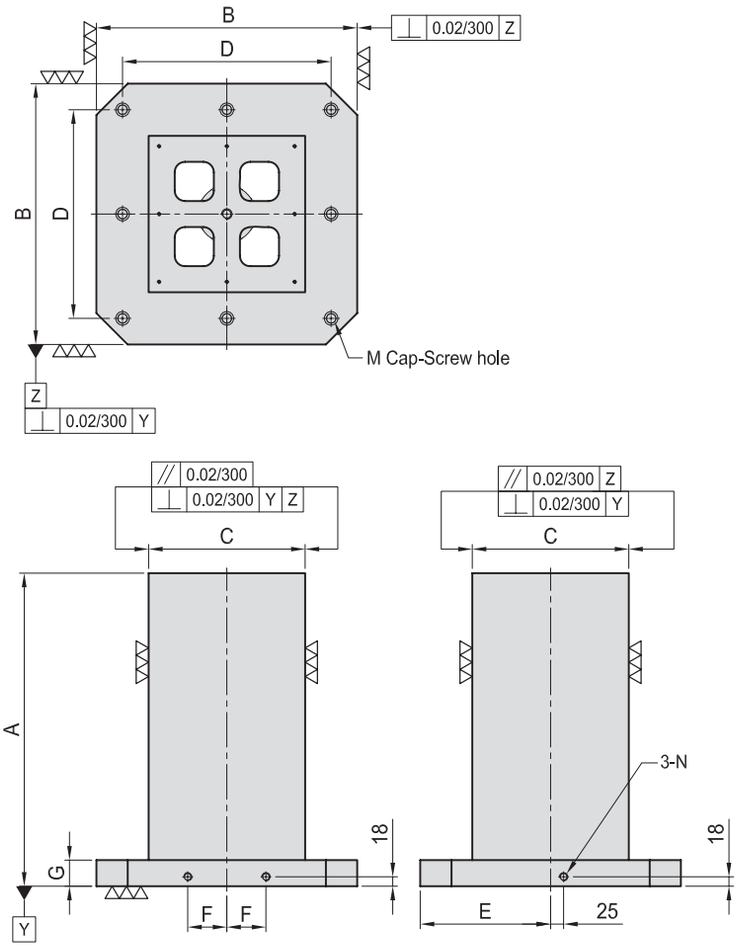

MODEL NO.	A	B	C	D	E	F	G	M	N	Mounting holes	kg
BP07-300300-0500	500	300	150	250	150	40	50	M12	M12	4	90
BP07-400400-0500	500	400	250	320	200	55	50	M16	M16	4	160
BP07-400400-0650	650										210
BP07-500500-0600	600	500	300	400	250	75	50	M16	M16	8	250
BP07-500500-0750	750										310
BP07-630630-0700	700	630	350	500	315	100	50	M16	M16	8	400
BP07-630630-0850	850										460
BP07-800800-0800	800	800	500	640	400	135	50	M16	M16	8	680
BP07-800800-1000	1000										800
BP07-10001000-1000	1000	1000	600	800	500	165	55	M20	M16	8	1164
BP07-10001000-1250	1250										1391

*Special Design Welcome !



BP08

MC四面基座
SQUARE TOOLING COLUMN

材质：HT250/QT500
热处理：退火
用处：适用于卧式MC
优点：以孔定位方式，利用标准化治具零件，可以快速组合成一套符合需求的治具。

Material:Cast Iron HT250/QT500
Heat treated(Normalized)
Application: Horizontal Machining Center.
Features: Alignment bushing & thread insert at every holelocation, easily adapts to standardized jig components.

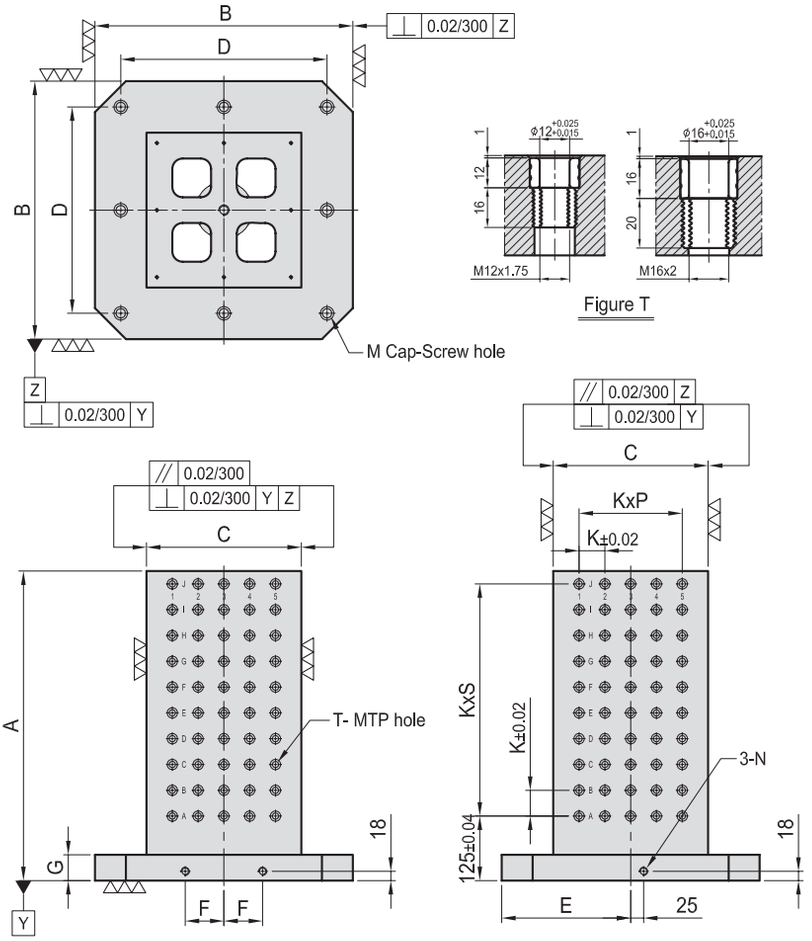

MODEL NO.	A	B	C	D	E	F	G	K	P	S	T	M	N	MTP	Mounting holes	kg
BP08-300300-0500-12	500	300	150	250	150	40	50	50	1	7	Ø12	M12	M12	M12	64	4	90
BP08-400400-0500-12	500	400	250	320	200	55	50	50	3	7	Ø12	M12	M16	M16	128	4	155
BP08-400400-0650-12	650									10					176		200
BP08-500500-0600-12	600	500	300	400	250	75	50	50	4	9	Ø12	M12	M16	M16	200	8	240
BP08-500500-0750-12	750									12					260		300
BP08-630630-0700-12	700	630	350	500	315	100	50	50	5	11	Ø12	M12	M16	M16	288	8	360
BP08-630630-0850-12	850									14					360		445
BP08-800800-0800-12	800	800	500	640	400	135	50	50	8	13	Ø12	M12	M16	M16	504	8	635
BP08-800800-1000-12	1000									17					648		780
BP08-10001000-1000-12	1000	1000	600	800	500	165	55	50	10	17	Ø12	M12	M20	M16	792	8	1164
BP08-10001000-1250-12	1250									22					1012		1391

MODEL NO.	A	B	C	D	E	F	G	K	P	S	T	M	N	MTP	Mounting holes	kg
BP08-300300-0500-16	500	300	150	250	150	40	50	50	1	7	Ø16	M16	M12	M12	64	4	90
BP08-400400-0500-16	500	400	250	320	200	55	50	50	3	7	Ø16	M16	M16	M16	128	4	152
BP08-400400-0650-16	650									10					176		195
BP08-500500-0600-16	600	500	300	400	250	75	50	50	4	9	Ø16	M16	M16	M16	200	8	235
BP08-500500-0750-16	750									12					260		295
BP08-630630-0700-16	700	630	350	500	315	100	50	50	5	11	Ø16	M16	M16	M16	288	8	365
BP08-630630-0850-16	850									14					360		440
BP08-800800-0800-16	800	800	500	640	400	135	50	50	8	13	Ø16	M16	M16	M16	504	8	630
BP08-800800-1000-16	1000									17					648		770
BP08-10001000-1000-16	1000	1000	600	800	500	165	55	50	10	17	Ø16	M16	M20	M16	792	8	1164
BP08-10001000-1250-16	1250									22					1012		1391

*Special Design Welcome !



BP09

MC四面基座
SQUARE TOOLING COLUMN

材质：HT250/QT500
热处理：退火
用处：适用于卧式MC
优点：以T型槽定位方式，利用标准化治具零件，可以快速组合完成一套符合需求的治具。

Material:Cast Iron HT250/QT500
Heat treated(Normalized)
Application: Horizontal Machining Center.
Features:T-Slots running in 2 directions, easily adapts tostandardized jig components.

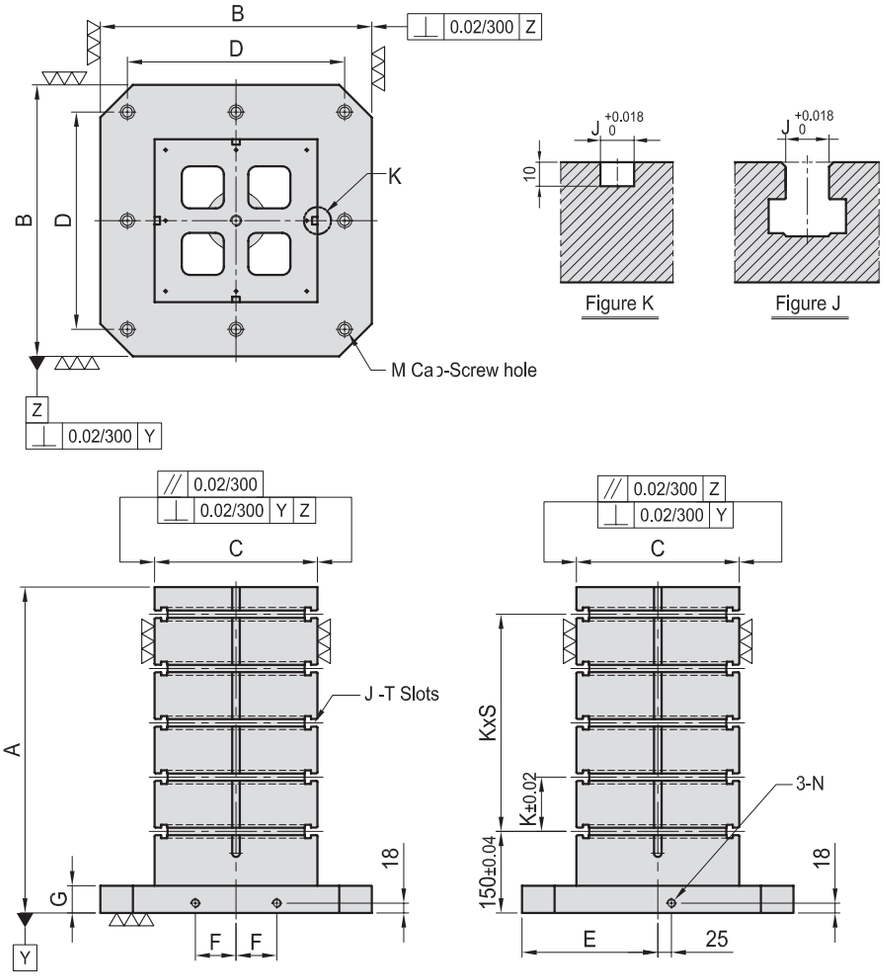

MODEL NO.	A	B	C	D	E	F	G	M	N	K	S	J	Mounting holes	kg
BP09-400400-0500-14	500	400	250	320	200	55	50	M16	M16	100	3	14	4	160
BP09-400400-0650-14	650										4			200
BP09-500500-0600-14	600	500	300	400	250	75	50	M16	M16	100	4	14	8	270
BP09-500500-0750-14	750										5			300
BP09-630630-0700-14	700	630	350	500	315	100	50	M16	M16	125	4	14	8	375
BP09-630630-0850-14	850										5			460
BP09-800800-0800-14	800	800	500	640	400	135	50	M16	M16	150	4	14	8	655
BP09-800800-1000-14	1000										5			800
BP09-10001000-1000-14	1000	1000	600	800	500	165	55	M20	M16	160	5	14	8	1146
BP09-10001000-1250-14	1250										6			1358

MODEL NO.	A	B	C	D	E	F	G	M	N	K	S	J	Mounting holes	kg
BP09-400400-0500-18	500	400	250	320	200	55	50	M16	M16	100	3	18	4	155
BP09-400400-0650-18	650										4			190
BP09-500500-0600-18	600	500	300	400	250	75	50	M16	M16	100	4	18	8	265
BP09-500500-0750-18	750										5			290
BP09-630630-0700-18	700	630	350	500	315	100	50	M16	M16	125	4	18	8	365
BP09-630630-0850-18	850										5			450
BP09-800800-0800-18	800	800	500	640	400	135	50	M16	M16	150	4	18	8	638
BP09-800800-1000-18	1000										5			790
BP09-10001000-1000-18	1000	1000	600	800	500	165	55	M20	M16	160	5	18	8	1146
BP09-10001000-1250-18	1250										6			1358

*Special Design Welcome !



BP10

MC双面基座

DOUBLE SIDED TOOLING COLUMN

材质：HT250/QT500
热处理：退火
用处：适用于卧式MC
优点：可以根据实际需求，自行钻孔加工制作专用治具。

Material:Cast Iron HT250/QT500
Heat treated(Normalized)
Application: Horizontal Machining Center.
Features: Ready to accept a hole pattern for your sEye bolt & top cover included.

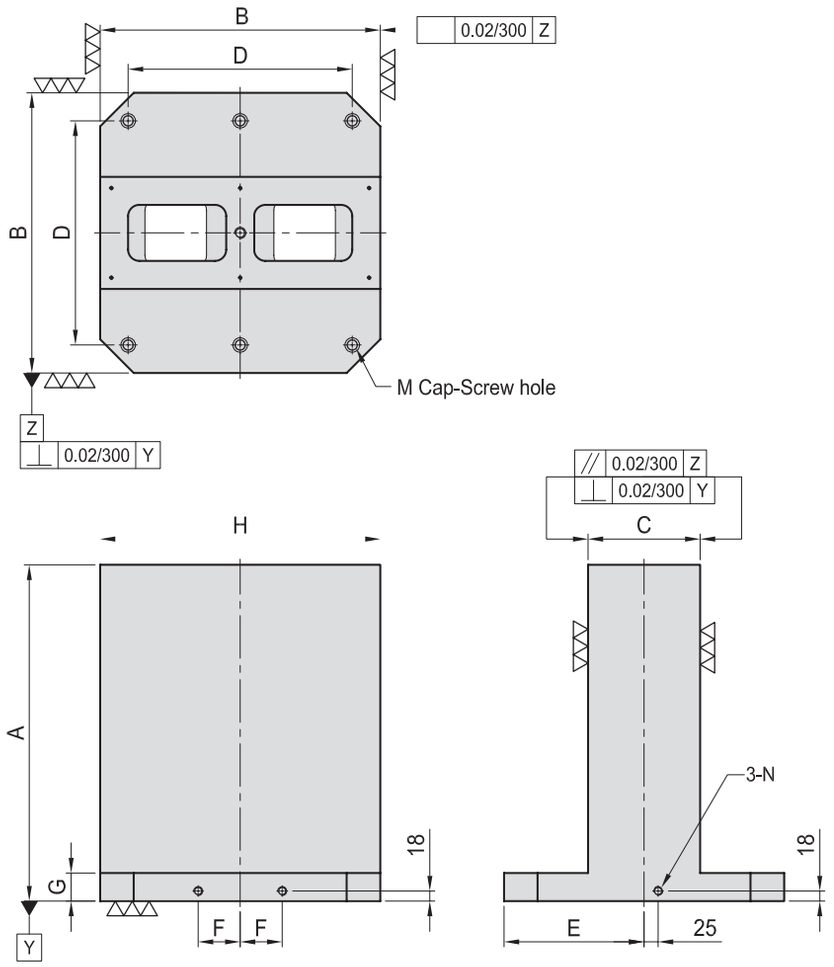

MODEL NO.	A	B	C	D	E	F	G	H	M	N	Mounting holes	kg
BP10-300300-0500	500	300	80	250	150	40	50	300	M12	M12	4	115
BP10-400400-0500	500	400	150	320	200	55	50	400	M16	M16	4	170
BP10-400400-0650	650											215
BP10-500500-0600	600	500	200	400	250	75	50	500	M16	M16	6	270
BP10-500500-0750	750											350
BP10-630630-0700	700	630	250	500	315	100	50	630	M16	M16	6	445
BP10-630630-0850	850											520
BP10-800800-0800	800	800	300	640	400	135	50	800	M16	M16	6	675
BP10-800800-1000	1000											815
BP10-10001000-1000	1000	1000	350	800	500	165	55	1000	M20	M16	6	1162
BP10-10001000-1250	1250											1377

*Special Design Welcome !



BP11

MC双面基座
DOUBLE SIDED TOOLING COLUMN

材质：HT250/QT500
热处理：退火
用处：适用于卧式MC
优点：以孔定位方式，利用标准化治具零件，可以快速组合成一套符合需求的治具。

Material:Cast Iron HT250/QT500
Heat treated(Normalized)
Application: Horizontal Machining Center.
Features: Alignment bushing & thread insert at every holelocation, easily adapts to standardized jig components.

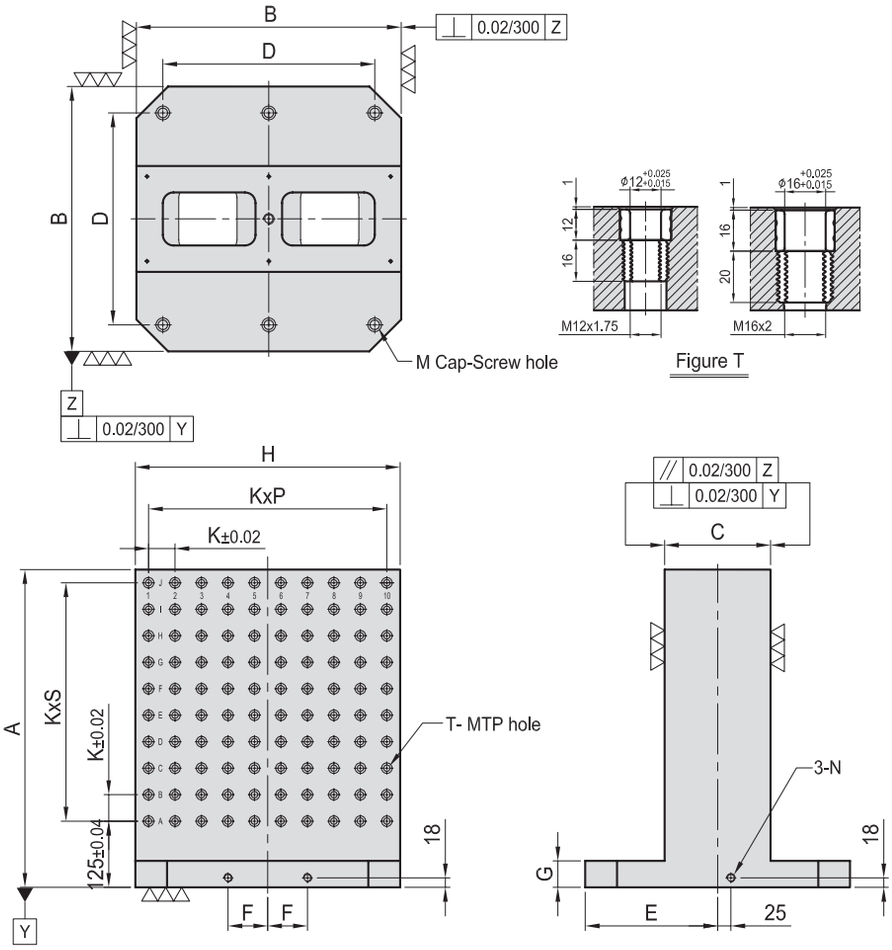

MODEL NO.	A	B	C	D	E	F	G	H	K	P	S	T	M	N	MTP	Mounting holes	kg
BP11-300300-0500-12	500	300	80	250	150	40	50	300	50	5	7	Ø12	M12	M12	M12	96	4	110
BP11-400400-0500-12	500	400	150	320	200	55	50	400	50	7	7	Ø12	M12	M16	M16	128	4	165
BP11-400400-0650-12	650										10					176		210
BP11-500500-0600-12	600	500	200	400	250	75	50	500	50	9	9	Ø12	M12	M16	M16	200	6	265
BP11-500500-0750-12	750										12					260		335
BP11-630630-0700-12	700	630	250	500	315	100	50	630	50	11	11	Ø12	M12	M16	M16	288	6	435
BP11-630630-0850-12	850										14					360		515
BP11-800800-0800-12	800	800	300	640	400	135	50	800	50	14	13	Ø12	M12	M16	M16	420	6	660
BP11-800800-1000-12	1000										17					540		800
BP11-10001000-1000-12	1000	1000	350	800	500	165	55	1000	50	18	17	Ø12	M12	M20	M16	684	6	1158
BP11-10001000-1250-12	1250										22					874		1375

MODEL NO.	A	B	C	D	E	F	G	H	K	P	S	T	M	N	MTP	Mounting holes	kg
BP11-300300-0500-16	500	300	80	250	150	40	50	300	50	5	7	Ø16	M16	M12	M12	96	4	105
BP11-400400-0500-16	500	400	150	320	200	55	50	400	50	7	7	Ø16	M16	M16	M16	128	4	160
BP11-400400-0650-16	650										10					176		205
BP11-500500-0600-16	600	500	200	400	250	75	50	500	50	9	9	Ø16	M16	M16	M16	200	6	260
BP11-500500-0750-16	750										12					260		330
BP11-630630-0700-16	700	630	250	500	315	100	50	630	50	11	11	Ø16	M16	M16	M16	288	6	430
BP11-630630-0850-16	850										14					360		505
BP11-800800-0800-16	800	800	300	640	400	135	50	800	50	14	13	Ø16	M16	M16	M16	420	6	650
BP11-800800-1000-16	1000										17					540		790
BP11-10001000-1000-16	1000	1000	350	800	500	165	55	1000	50	18	17	Ø16	M16	M20	M16	684	6	1158
BP11-10001000-1250-16	1250										22					874		1375

*Special Design Welcome !



BP12

MC双面基座
DOUBLE SIDED TOOLING COLUMN

材质：HT250/QT500
热处理：退火
用处：适用于卧式MC
优点：以T型槽定位方式，利用标准化治具零件，可以快速组合完成一套符合需求的治具。

Material:Cast Iron HT250/QT500
Heat treated(Normalized)
Application: Horizontal Machining Center.
Features:T-Slots running in 2 directions, easily adapts tostandardized jig components.

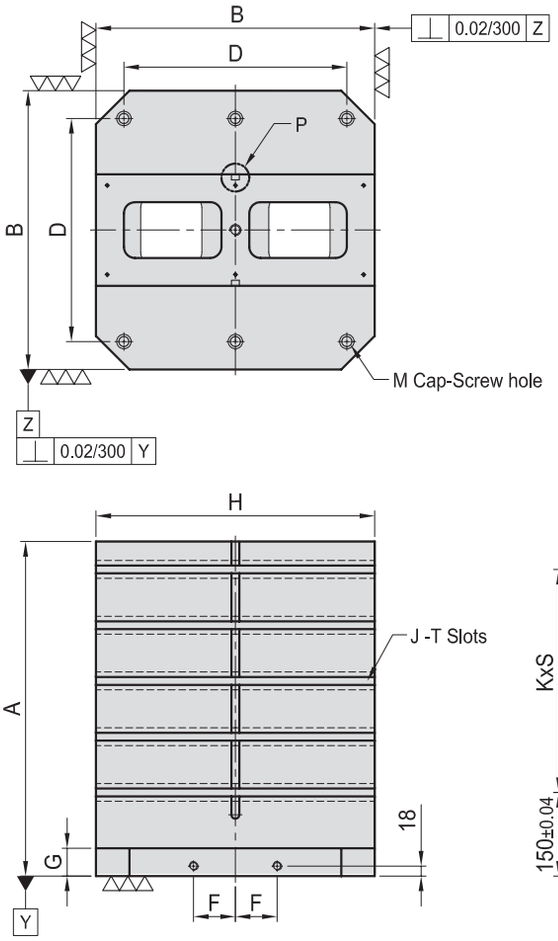

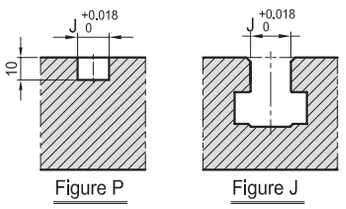

MODEL NO.	A	B	C	D	E	F	G	M	N	H	J	K	S	Mounting holes	kg
BP12-400400-0500-14	500	400	150	320	200	55	50	M16	M16	400	14	100	3	4	170
BP12-400400-0650-14	650												4		220
BP12-500500-0600-14	600	500	200	400	250	75	50	M16	M16	500	14	100	4	6	290
BP12-500500-0750-14	750												5		335
BP12-630630-0700-14	700	630	250	500	315	100	50	M16	M16	630	14	125	4	6	440
BP12-630630-0850-14	850												5		515
BP12-800800-0800-14	800	800	300	640	400	135	50	M16	M16	800	14	150	4	6	670
BP12-800800-1000-14	1000												5		790
BP12-10001000-1000-14	1000	1000	350	800	500	165	55	M20	M16	1000	14	160	5	6	1158
BP12-10001000-1250-14	1250												6		1375

MODEL NO.	A	B	C	D	E	F	G	M	N	H	J	K	S	Mounting holes	kg
BP12-400400-0500-18	500	400	150	320	200	55	50	M16	M16	400	18	100	3	4	165
BP12-400400-0650-18	650												4		210
BP12-500500-0600-18	600	500	200	400	250	75	50	M16	M16	500	18	100	4	6	280
BP12-500500-0750-18	750												5		325
BP12-630630-0700-18	700	630	250	500	315	100	50	M16	M16	630	18	125	4	6	430
BP12-630630-0850-18	850												5		500
BP12-800800-0800-18	800	800	300	640	400	135	50	M16	M16	800	18	150	4	6	660
BP12-800800-1000-18	1000												5		785
BP12-10001000-1000-18	1000	1000	350	800	500	165	55	M20	M16	1000	18	160	5	6	1158
BP12-10001000-1250-18	1250												6		1375

*Special Design Welcome !



BP13

MC替换式双面基座
MODULAR TOOLING COLUMN

材质：HT250/QT500
热处理：退火
用处：卧式MC
优点：模块化快换系统，简易3点安装，与BP14和BP15一起使用。

Material:Cast Iron HT250/QT500
Heat treated(Normalized)
Application: Horizontal Machining Center.

Features: Modular quick-change system, simple 3 point mounting,use with BP14 & BP15 subplates.Eye bolt, top cover & side covers included

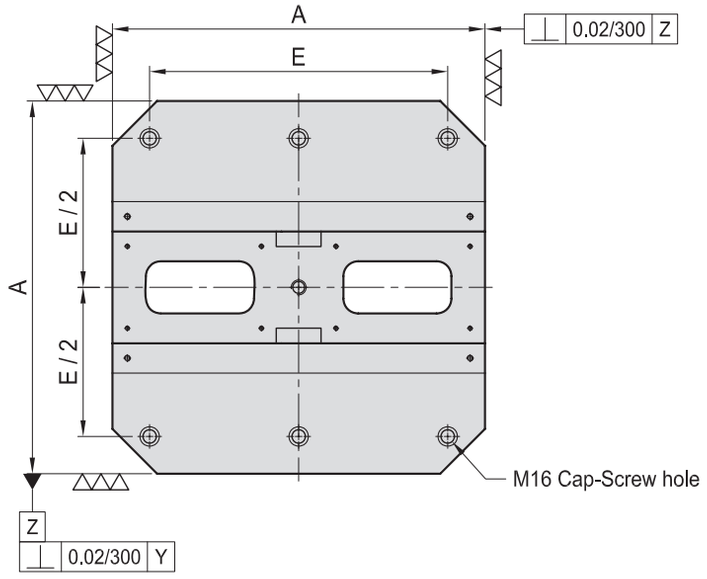

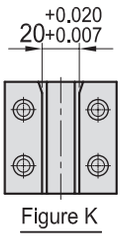

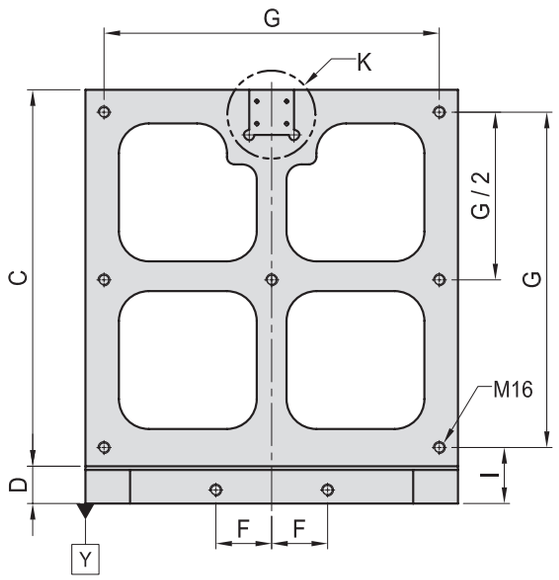

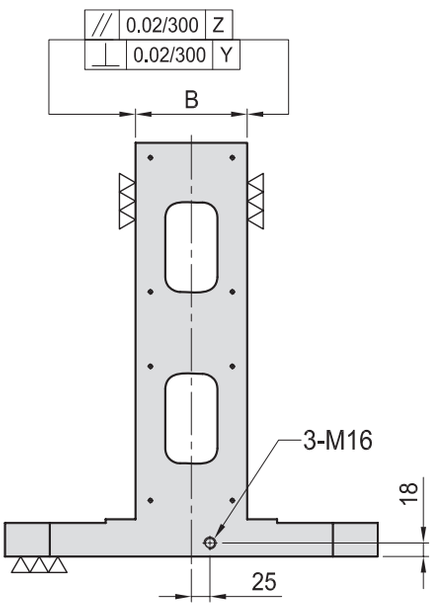

MODEL NO.	A	B	C	D	E	F	G	I	Mounting holes	kg
BP13-400400-0450	400	130	400	50	320	55	350	70	4	125
BP13-500500-0555	500	150	500	55	400	75	450	75	6	178
BP13-630630-0690	630	220	630	60	500	100	580	80	6	350
BP13-800800-0860	800	250	800	60	640	135	750	80	6	515

*Special Design Welcome !



BP14

辅助板 SUB-PLATE

材质：HT250/QT500
热处理：退火
用处：用于替换双面基座，与BP13配套使用。
优点：可以根据实际需求，自行钻孔加工制作专用治具。

Material:Cast Iron HT250/QT500
Heat treated(Normalized)
Application: Modular quick change subplate, use with BP13.
Features: Ready to accept a hole pattern for your special jig.

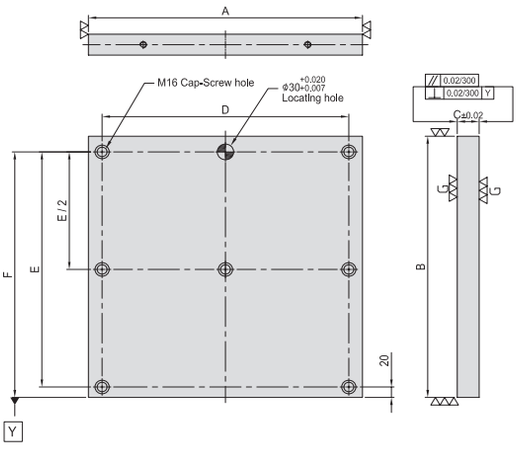

MODEL NO.	A	B	C	D	E	F	Mounting holes	kg
BP14-40400-0400	400	400	40	350	350	370	5	46
BP14-40500-0500	500	500	40	450	450	470	7	72
BP14-40630-0630	630	630	40	580	580	600	7	114
BP14-50800-0800	800	800	50	750	750	770	7	232

*Special Design Welcome !

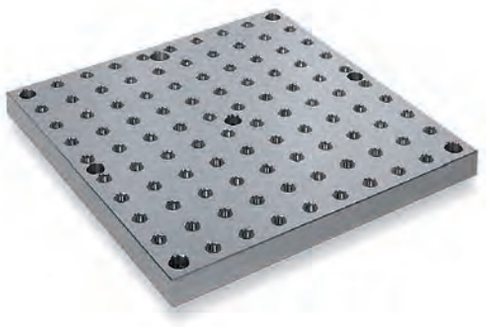

BP15

辅助板 SUB-PLATE

材质：HT250/QT500
热处理：退火用处：用于替换双面基座，与BP13配套使用。
优点：以孔定位方式，利用标准化治具零件，可以快速组合成一套符合需求的治具。

Material:Cast Iron HT250/QT500
Heat treated(Normalized)
Application:Modular quick change subplate, use with BP13.
Features: Alignment bushing & thread insert at every holelocation, easily adapts to standardized jig components.

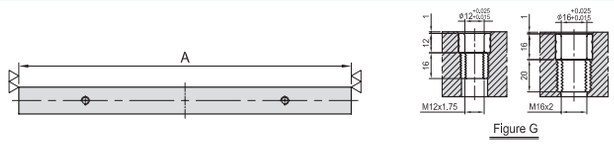

Figure G

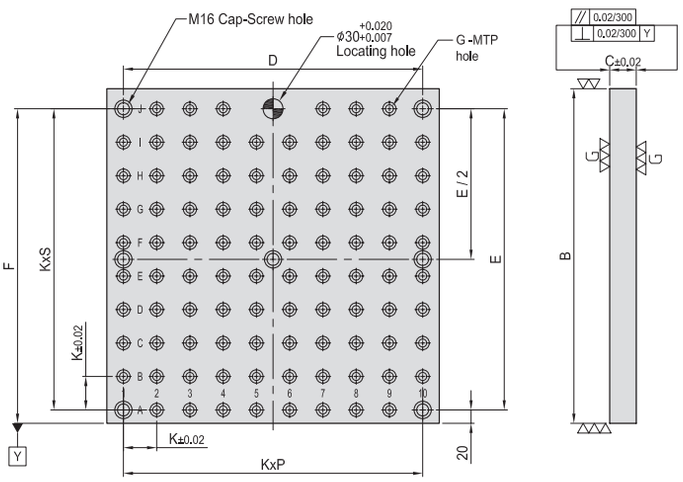

MODEL NO.	A	B	C	D	E	F	K	P	S	G		MTP	Mounting holes	kg
BP15-40400-0400-12	400	400	40	350	350	370	50	7	7	Ø12	M12	58	5	42
BP15-40500-0500-12	500	500		450	450	470		9	9			94	7	69
BP15-40630-0630-12	630	630	40	580	580	600	50	11	11	Ø12	M12	138	7	108
BP15-50800-0800-12	800	800	50	750	750	770		15	15			250		220

MODEL NO.	A	B	C	D	E	F	K	P	S	G		MTP	Mounting holes	kg
BP15-40400-0400-16	400	400	40	350	350	370	50	7	7	Ø16	M16	58	5	41
BP15-40500-0500-16	500	500		450	450	470		9	9			90	7	67
BP15-40630-0630-16	630	630	40	580	580	600	50	11	11	Ø16	M16	138	7	105
BP15-50800-0800-16	800	800	50	750	750	770		15	15			246		215

BP16



圆形基板 ROUND BASE PLATE

材质：HT250/QT500
热处理：退火
用处：适用于NC分度盘
优点：可根据需要，自行钻孔加工制作专用治具。

Material:Cast Iron HT250/QT500
Heat treated(Normalized)
Application: NC Rotary Table or Indexer.
Features: Ready to accept a hole pattern for your special jig.

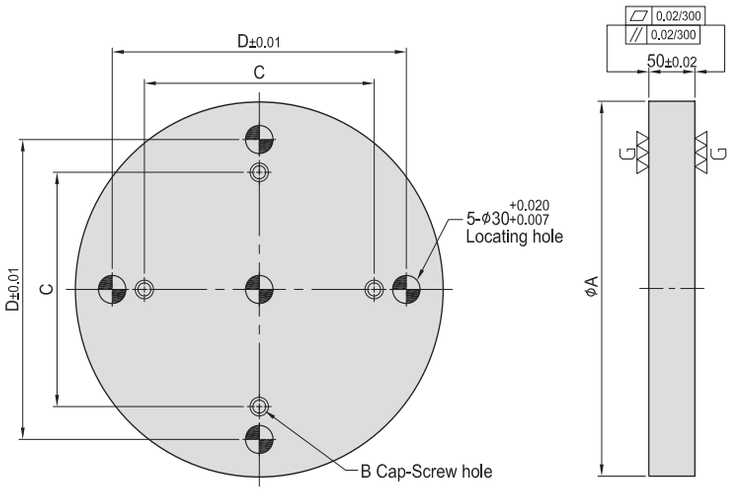

MODEL NO.	A	B	C	D	kg
BP16-50-0300	300	M12	150	220	25
BP16-50-0400	400		250	320	40
BP16-50-0500	500	M16	300	400	65
BP16-50-0600	600		400	500	95

*Special Design Welcome !

BP17



圆形基板 ROUND BASE PLATE

材质：HT250/QT500
热处理：退火
用处：适用于NC分度盘
优点：以孔定位方式，利用标准化治具零件，可以快速组合成一套符合需求的治具。

Material:Cast Iron HT250/QT500
Heat treated(Normalized)
Application: NC Rotary Table or Indexer.
Features: Alignment bushing & thread insert at every holelocation, easily adapts to standardized jig components.

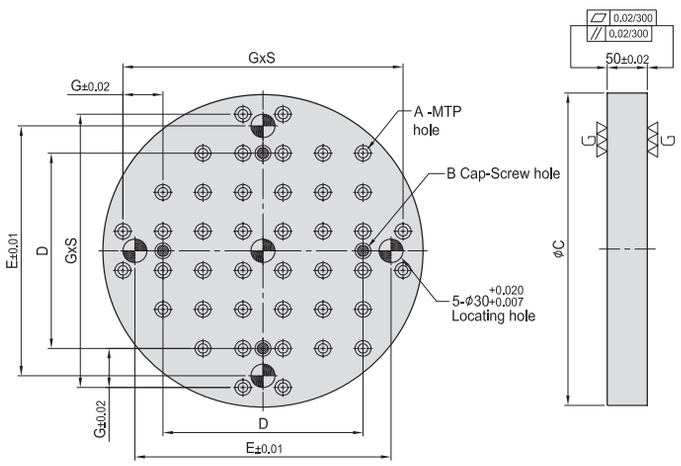

MODEL NO.	A		B	C	D	E	G	S	MTP	kg
BP17-50-0300-12	Ø12	M12	M12	300	150	220	50	5	24	23
BP17-50-0400-12				400	250	320		7	44	42
BP17-50-0500-12	Ø12	M12	M16	500	300	400	50	9	68	70
BP17-50-0600-12				600	400	500		11	96	98
BP17-50-0500-16	Ø16	M16	M16	500	300	400	50	9	68	68
BP17-50-0600-16				600	400	500		11	96	95

*Special Design Welcome !

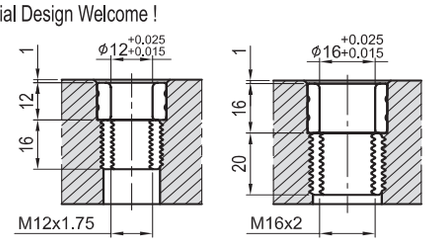

Figure A

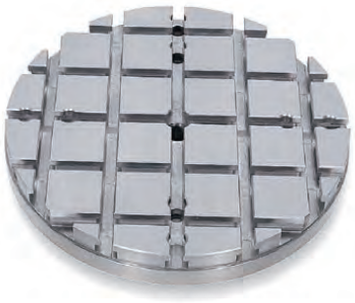

BP18

圆形基板 ROUND BASE PLATE

材质：HT250/QT500
热处理：退火
用处：适用于NC分度盘
优点：以T型槽定位方式，利用标准化治具零件，可以快速组合完成一套符合需求的治具。

Material:Cast Iron HT250/QT500
Heat treated(Normalized)
Application: NC Rotary Table or Indexer.
Features: T-Slots running in 2 directions, easily adapts tostandardized jig components

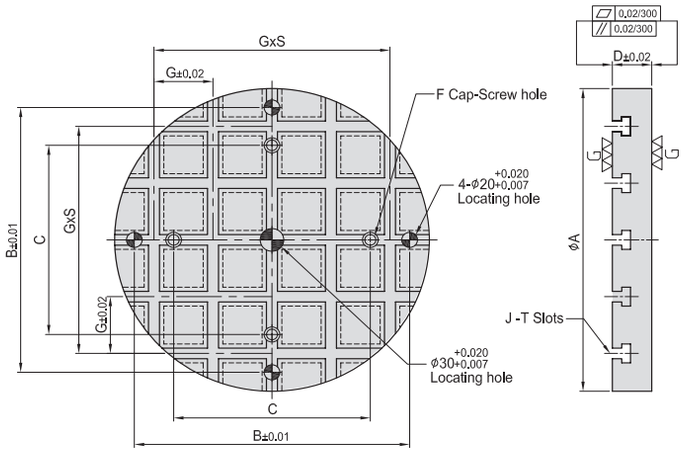

MODEL NO.	A	B	C	D	F	G	S	J	kg
BP18-50-0300-14	300	250	150	50	M12	75	2	14	22
BP18-50-0400-14	400	350	250				4		36
BP18-65-0500-18	500	450	300	65	M16	100	4	18	74
BP18-65-0600-18	600	550	400						110

*Special Design Welcome !

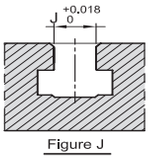

BP19

辅助板 SUB-PLATE



材质：45号钢
热处理：渗碳淬火
用处：适用于各种基板和基座
优点：以T型槽定位方式，利用标准化治具零件，可以快速组合完成一套符合需求的治具。

Material:45#
Application: Multipurpose subplate
Features: Ready to accept a hole pattern for your special jig

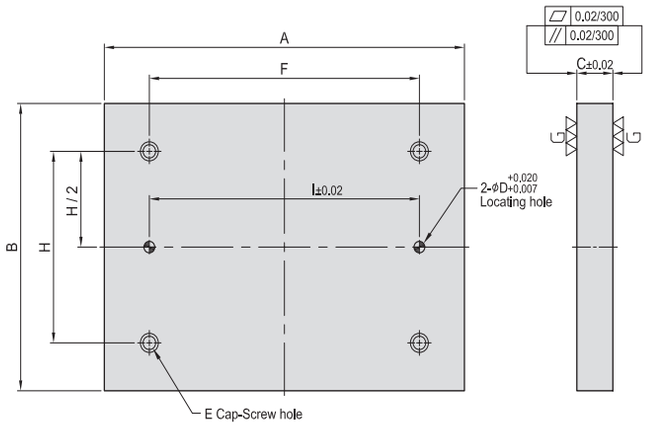

MODEL NO.	A	B	C	D	E	F	H	I	kg
BP19-30150-0200-12	200	150	30	12	M12	100	100	100	8.0
BP19-30150-0300-12	300					200		200	11.0
BP19-30200-0200-12	200	200	30	12	M12	100	100	100	9.5
BP19-30200-0300-12	300					200		200	14.5
BP19-30300-0300-12	300	300	30	12	M12	200	200	200	21.5
BP19-40300-0400-12	400		40			300		300	38.0
BP19-40400-0400-12	400	400	40	12	M12	300	300	300	51.0
BP19-40400-0500-12	500					400		400	63.0

MODEL NO.	A	B	C	D	E	F	H	I	kg
BP19-30150-0200-16	200	150	30	16	M16	100	100	100	8.0
BP19-30150-0300-16	300					200		200	11.0
BP19-30200-0200-16	200	200	30	16	M16	100	100	100	9.5
BP19-30200-0300-16	300					200		200	14.5
BP19-30300-0300-16	300	300	30	16	M16	200	200	200	21.5
BP19-40300-0400-16	400		40			300		300	38.0
BP19-40400-0400-16	400	400	40	16	M16	300	300	300	51.0
BP19-40400-0500-16	500					400		400	63.0



BP20

MC直角基座 M/C ANGLE PLATE

材质：HT250/QT500
热处理：退火
用处：适用于卧式MC
优点：可以根据实际需求，自行钻孔加工制作专用治具。

Material:Cast Iron HT250/QT500
Heat treated(Normalized)
Application: HMC/VMC.
Features: Ready to accept a hole pattern for your special jig.

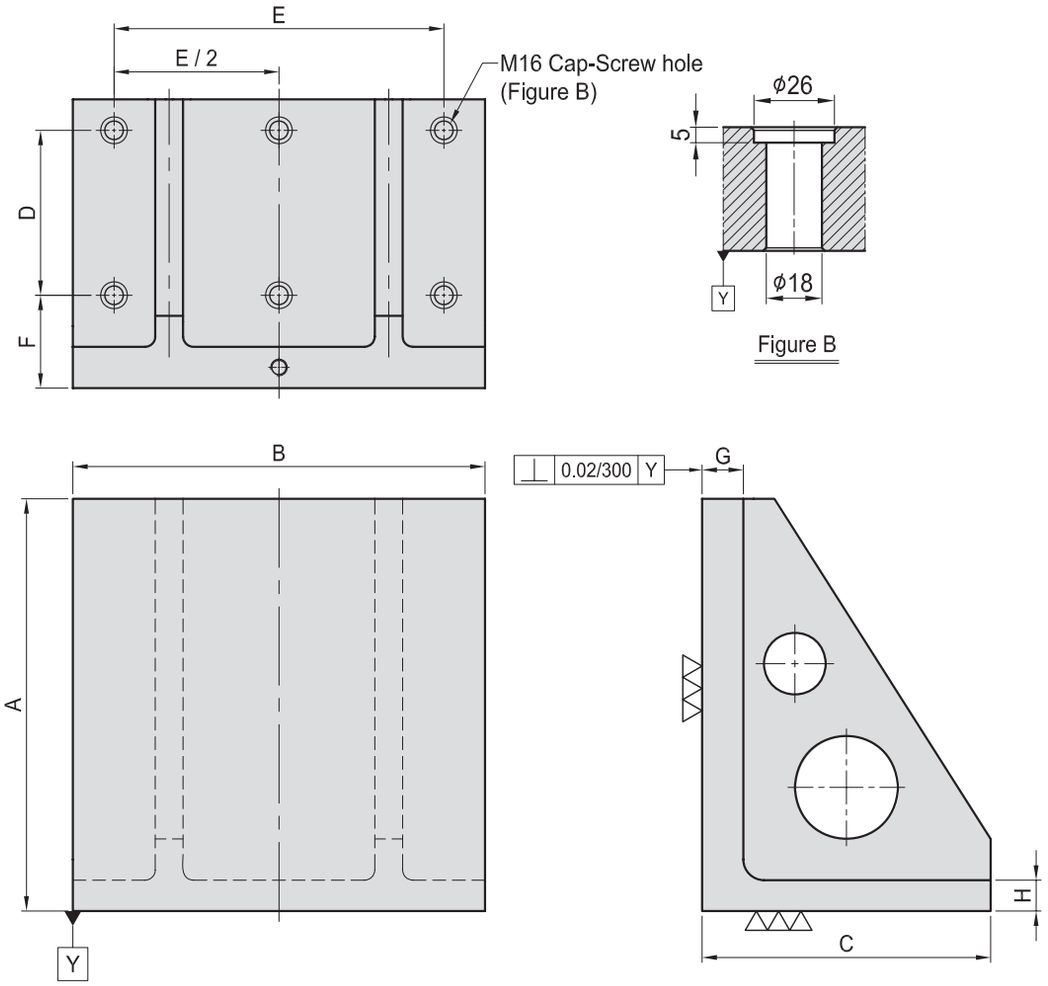

Figure B

MODEL NO.	A	B	C	D	E	F	G	H	Mounting holes	kg
BP20-220300-0300	300	300	220	100	250	90	40	30	6	50
BP20-280400-0400	400	400	280	160	320					90
BP20-340500-0500	500	500	340	200	400	90	50	35	6	165
BP20-435630-0630	630	630	435	250	500	100		40		275
BP20-525800-0800	800	800	525	320	640	115	50	45	6	475

*Special Design Welcome !



BP21

MC直角基座 M/C ANGLE PLATE

热处理：退火
用处：适用于卧式MC
优点：以孔定位方式，利用标准化治具零件，可以快速组合成一套符合需求的治具。

Material:Cast Iron HT250/QT500
Heat treated(Normalized)
Application: Horizontal Machining Center.

Features: Alignment bushing & thread insert at every holelocation, easily adapts to standardized jig components.

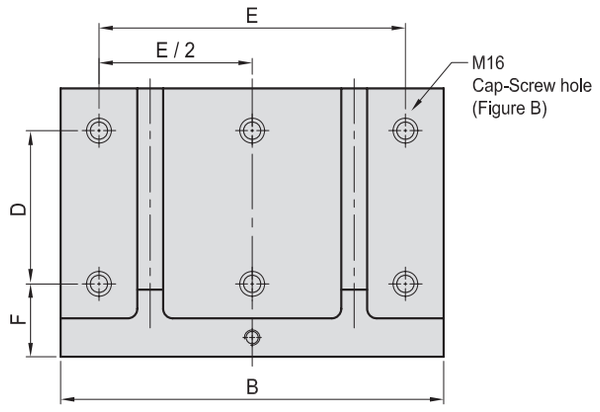

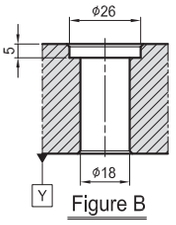

Figure B

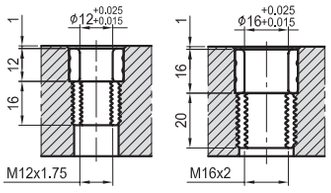

Figure J

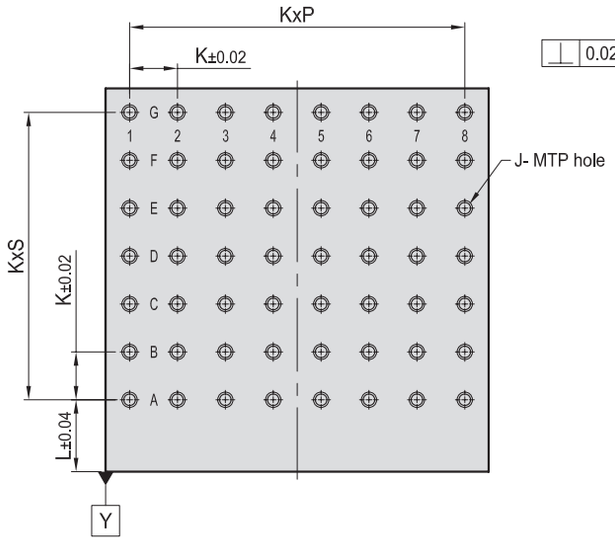

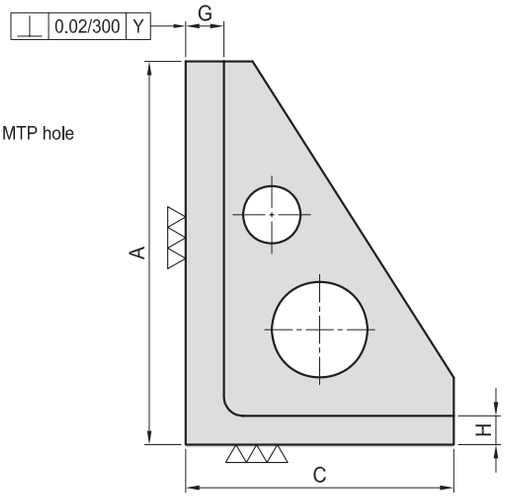

MODEL NO.	A	B	C	D	E	F	G	H	J		K	L	P	S	MTP	Mounting holes	kg
BP21-220300-0300-12	300	300	220	100	250	90	40	30	Ø12	M12	50	75	5	4	30	6	50
BP21-280400-0400-12	400	400	280	160	320								7	6	56		87
BP21-340500-0500-12	500	500	340	200	400	90	50	35	Ø12	M12	50	75	9	8	90	6	173
BP21-435630-0630-12	630	630	435	250	500	100		40				40	11	11	144		300
BP21-525800-0800-12	800	800	525	320	640	115	50	45	Ø12	M12	50	75	15	14	240	6	477
BP21-220300-0300-16	300	300	220	100	250	90	40	30	Ø16	M16	50	75	5	4	30	6	46
BP21-280400-0400-16	400	400	280	160	320								7	6	56		85
BP21-340500-0500-16	500	500	340	200	400	90	50	35	Ø16	M16	50	75	9	8	90	6	170
BP21-435630-0630-16	630	630	435	250	500	100		40				40	11	11	144		295
BP21-525800-0800-16	800	800	525	320	640	115	50	45	Ø16	M16	50	75	15	14	240	6	470

*Special Design Welcome !



BP22

MC直角基座　M/C ANGLE PLATE

材质：HT250/QT500
热处理：退火
用处：适用于卧式MC
优点：以T型槽定位方式，利用标准化治具零件，可以快速组合完成一套符合需求的治具。

Material:Cast Iron HT250/QT500
Heat treated(Normalized)
Application: Horizontal Machining Center.
Features:T-Slots running in 2 directions, easily adapts tostandardized jig components.

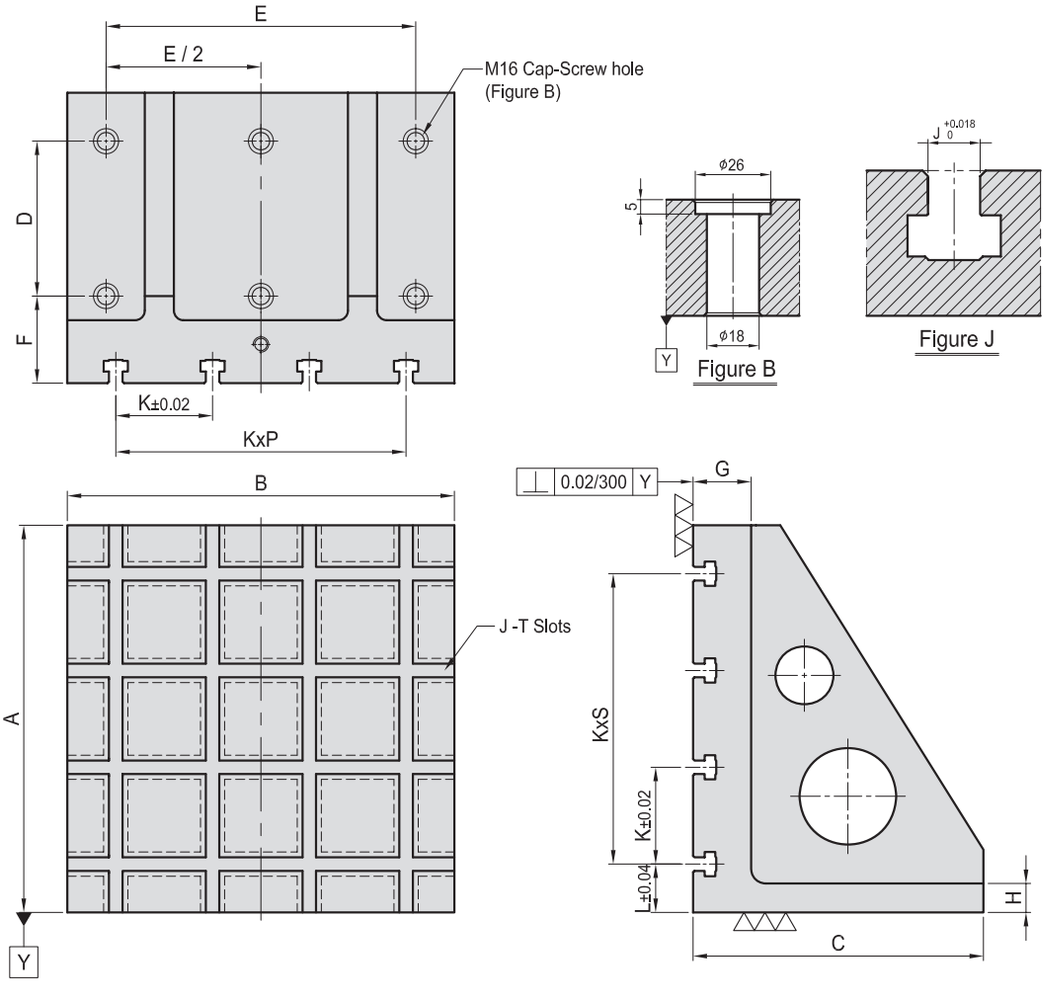

MODEL NO.	A	B	C	D	E	F	G	H	J	K	L	P	S	Mounting holes	kg
BP22-220300-0300-14	300	300	220	100	250	90	60	30	14	100	50	2	2	6	53
BP22-300400-0400-14	400	400	300	160	320							3	3		101
BP22-350500-0500-14	500	500	350	200	400	90	60	35	14	100	50	4	4	6	170
BP22-450630-0630-14	630	630	450	250	500	100	65	40		125	65				295
BP22-550800-0800-14	800	800	550	320	640	115	75	45	14	150	100	4	4	6	566
BP22-220300-0300-18	300	300	220	100	250	90	60	30	18	100	50	2	2	6	51
BP22-300400-0400-18	400	400	300	160	320							3	3		96
BP22-350500-0500-18	500	500	350	200	400	90	60	35	18	100	50	4	4	6	162
BP22-450630-0630-18	630	630	450	250	500	100	65	40		125	65				285
BP22-550800-0800-18	800	800	550	320	640	115	75	45	18	150	100	4	4	6	555

*Special Design Welcome !



BP23

MC直角基座
MC NARROW ANGLE PLATE

材质：HT250/QT500
热处理：退火
用处：适用于卧式和立式MC
优点：可以根据实际需求，自行钻孔加工制作专用治具。

Material:Cast Iron HT250/QT500
Heat treated(Normalized)
Application: HMC/VMC.
Features: Ready to accept a hole pattern for your special jig.

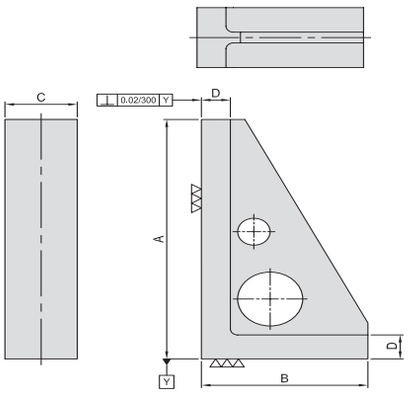

MODEL NO.	A	B	C	D	kg
BP23-180100-0300	300	180	100	40	14
BP23-230100-0400	400	230	100	40	20
BP23-280100-0500	500	280	100	40	25

*Special Design Welcome !



BP24

MC直角基座
MC NARROW ANGLE PLATE

材质：HT250/QT500
热处理：退火
用处：适用于立式和立式MC
优点：以孔定位方式，利用标准化治具零件，可以快速组合成一套符合需求的治具。

Material:Cast Iron HT250/QT500
Heat treated(Normalized)
Application:HMC/VMC.
Features: Alignment bushing & thread insert at every holelocation, easily adapts to standardized jig components.

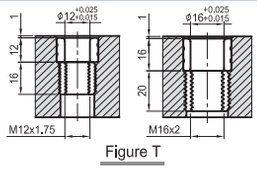

Figure T

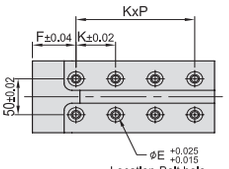

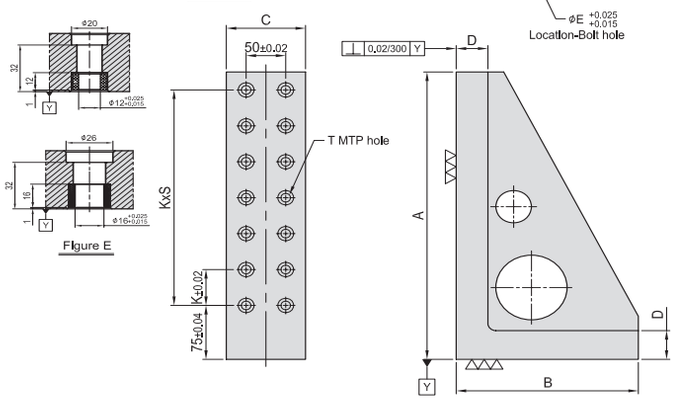

Figure E

MODEL NO.	A	B	C	D	E	F	K	P	S	T		MTP	Mounting holes	kg
BP24-180100-0300-12	300	180	100	40	12	55	50	2	4	Ø12	M12	10	6	12
BP24-230100-0400-12	400	230						3	6			14	8	19
BP24-280100-0500-12	500	280						4	8			18	10	23
BP24-180100-0300-16	300	180	100	40	16	55	50	2	4	Ø16	M16	10	6	13
BP24-230100-0400-16	400	230						3	6			14	8	20
BP24-280100-0500-16	500	280						4	8			18	10	24

*Special Design Welcome !



BP25

方块垫铁
RECTANGULAR CAST SECTION

材质：HT250/QT500
热处理：退火
用处：适用于基板和基座上
优点：可以根据需要自行钻孔加工制作治具。

Material:Cast Iron HT250/QT500
Heat treated(Normalized)
Application: Cast sections provide a fast & economical way tomake special jig components.
Features: Ready to accept a hole pattern for your special jig.

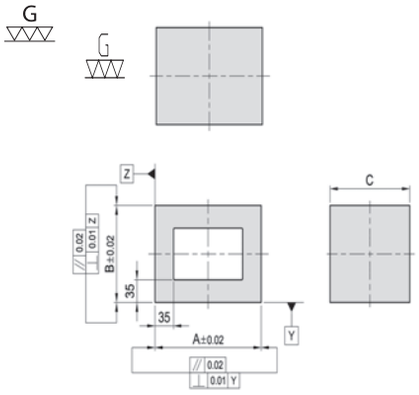

MODEL NO.	A	B	C	kg
BP25-200150-0150	200	150	150	23
BP25-250150-0200	250	200	150	30
BP25-300200-0250	300	250	200	56

*Special Design Welcome !



BP26

方块垫铁
RECTANGULAR CAST SECTION

材质：HT250/QT500
热处理：退火
用处：适用于基板和基座上
优点：因为工件的高低不同给与辅助用，以孔定位方式，利用标准化治具零件根据实际需求自由组合。

Material:Cast Iron HT250/QT500
Heat treated(Normalized)
Application: Cast sections provide a fast & economical way tomake special jig components.
Features: Alignment bushing & thread insert at every holeocation,easily adapts to standardized jig components.

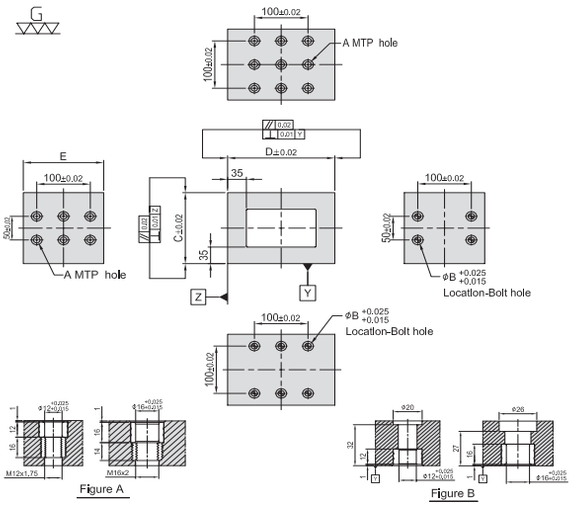

MODEL NO.	A		B	C	D	E	MTP	Mounting holes	kg
BP26-200150-0150-12	Ø12	M12	12	150	200	150	15	10	23
BP26-250150-0200-12				200	250		21	14	28
BP26-200150-0150-16	Ø16	M16	16	150	200	150	15	10	29
BP26-250150-0200-16				200	250		21	14	30

*Special Design Welcome !

BP27

方块垫铁
RECTANGULAR CAST SECTION



材质：HT250/QT500
热处理：退火
用处：适用于基板和基座上
优点：可以根据需要自行钻孔加工制作治具。

Material:Cast Iron HT250/QT500
Heat treated(Normalized)
Application: Cast sections provide a fast & economical way tomake special jig components.
Features: Ready to accept a hole pattern for your special jig.

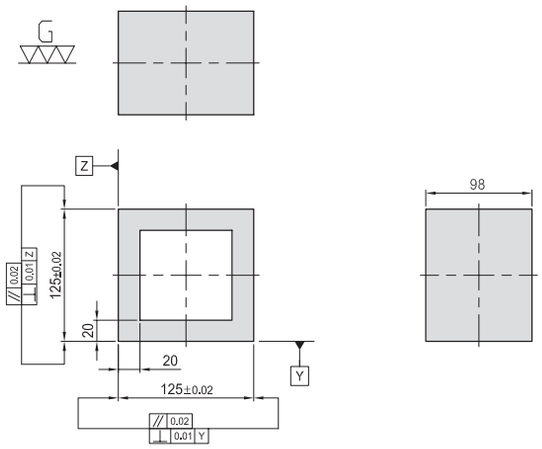

MODEL NO.	kg
BP27-125098-125	6

*Special Design Welcome !

BP28

方块垫铁
RECTANGULAR CAST SECTION



材质：HT250/QT500
热处理：退火
用处：适用于基板和基座上
优点：因为工件的高低不同给与辅助用，以孔定位方式，利用标准化治具零件根据实际需求自由组合。

Material:Cast Iron HT250/QT500
Heat treated(Normalized)
Application: Cast sections provide a fast & economical way tomake special jig components.
Features: Alignment bushing & thread insert at every holeocation,easily adapts to standardized jig components.

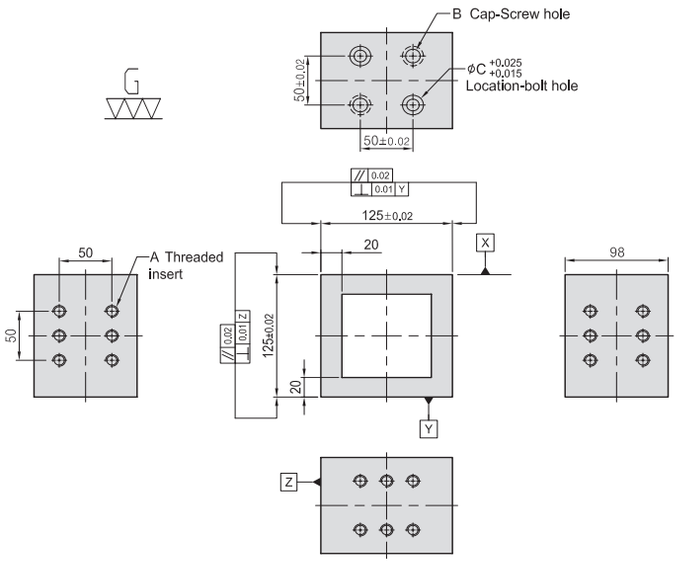

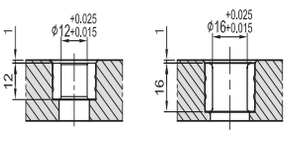

Figure C

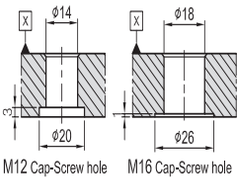

M12 Cap-Screw hole M16 Cap-Screw hole

Figure B

MODEL NO.	A	B	C	kg
BP28-125098-125-12	M12	M12	12	5.8
BP28-125098-125-16	M16	M16	16	5.5

*Special Design Welcome !



BP29

MC十字基座
CROSS TOOLING COLUMN

材质：HT250/QT500
热处理：退火
用处：适用于卧式和立式MC
优点：可以根据实际需求，自行钻孔加工制作专用治具。

Material:Cast Iron HT250/QT500
Heat treated(Normalized)
Application: HMC/VMC.
Features: Ready to accept a hole pattern for your special jig.

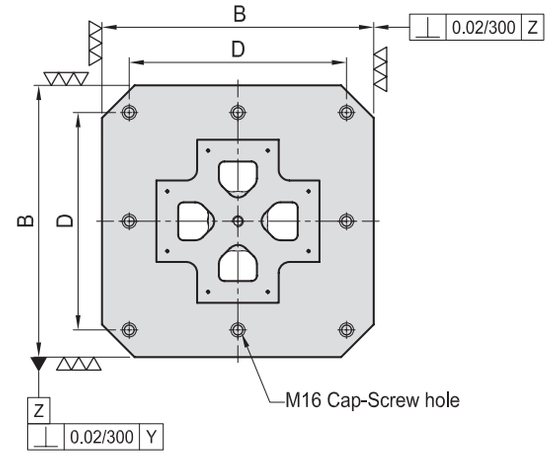

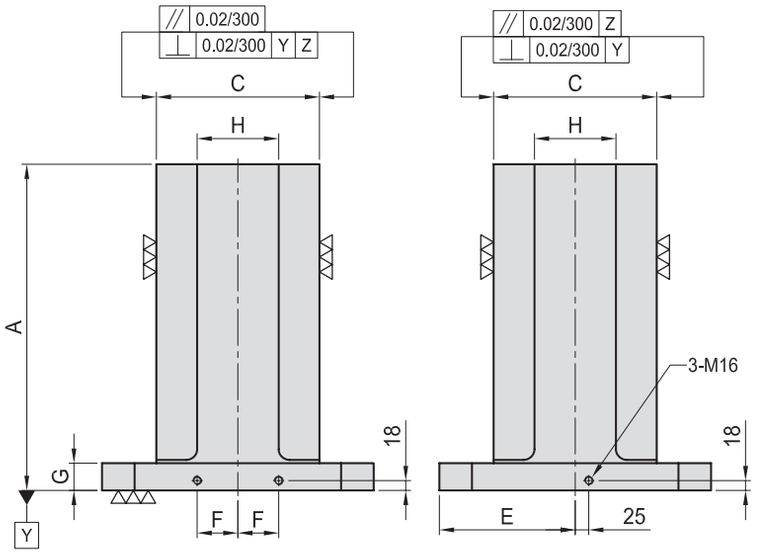

MODEL NO.	A	B	C	D	E	F	G	H	Mounting holes	kg
BP29-400400-0500	500	400	250	320	200	55	50	125	4	154
BP29-400400-0650	650									188
BP29-500500-0600	600	500	300	400	250	75	50	150	8	244
BP29-500500-0750	750									287
BP29-630630-0700	700	630	350	500	315	100	50	200	8	373
BP29-630630-0850	850									424
BP29-800800-0800	800	800	500	640	400	135	50	300	8	648
BP29-800800-1000	1000									753

*Special Design Welcome !



BP30

MC十字基座

CROSS TOOLING COLUMN

材质：HT250/QT500
热处理：退火
用处：适用于卧式和立式MC
优点：以孔定位方式，利用标准化治具零件，可以快速组合成一套符合需求的治具。

Material:Cast Iron HT250/QT500
Heat treated(Normalized)
Application: HMC/VMC.
Features: Alignment bushing & thread insert at every holelocation, easily adapts to standardized jig components.

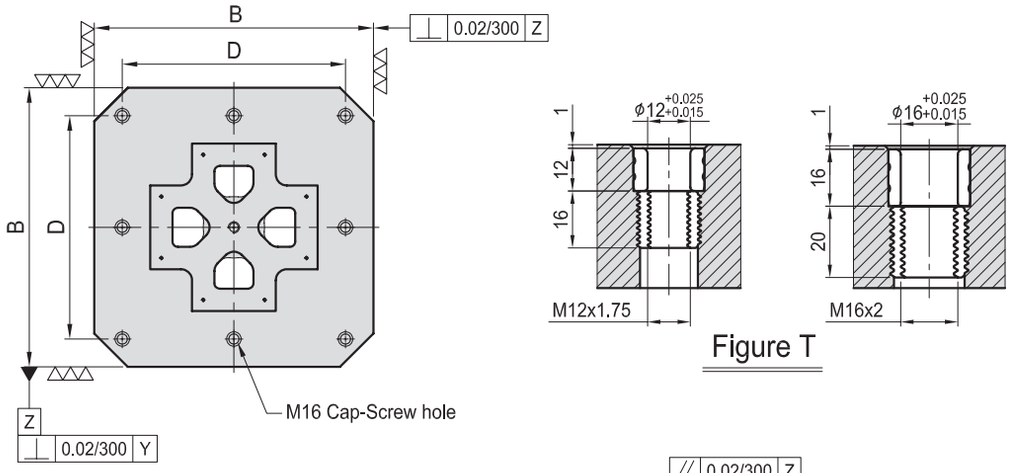

Figure T

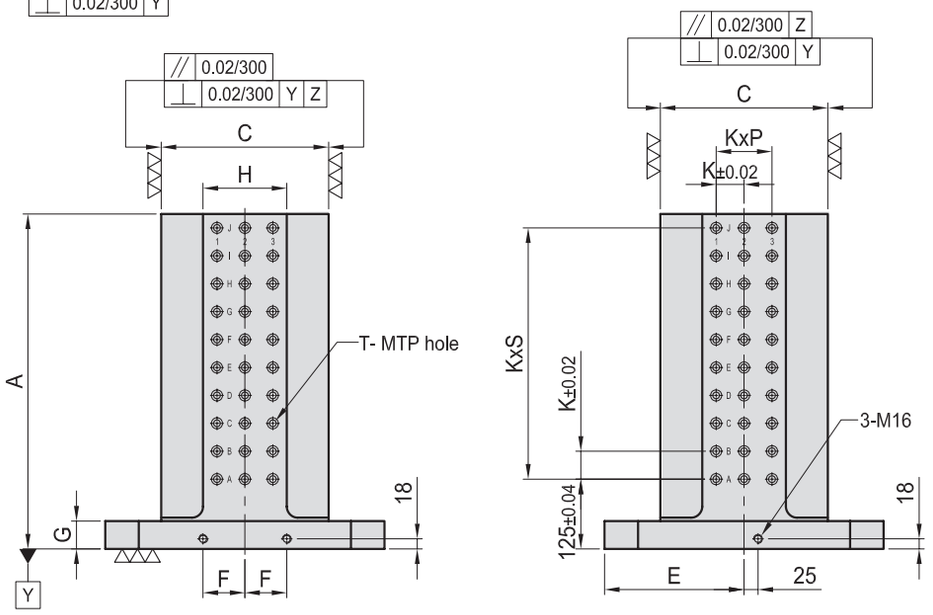

MODEL NO.	A	B	C	D	E	F	G	H	K	P	S	T		MTP	Mounting holes	kg
BP30-400400-0500-12	500	400	250	320	200	55	50	125	50	1	7	Ø12	M12	64	4	152
BP30-400400-0650-12	650										10			88		186
BP30-500500-0600-12	600	500	300	400	250	75	50	150	50	2	9	Ø12	M12	120	8	250
BP30-500500-0750-12	750										12			156		293
BP30-630630-0700-12	700	630	350	500	315	100	50	200	50	3	11	Ø12	M12	192	8	368
BP30-630630-0850-12	850										14			240		418
BP30-800800-0800-12	800	800	500	640	400	135	50	300	50	5	13	Ø12	M12	336	8	640
BP30-800800-1000-12	1000										17			432		740

MODEL NO.	A	B	C	D	E	F	G	H	K	P	S	T		MTP	Mounting holes	kg
BP30-400400-0500-16	500	400	250	320	200	55	50	125	50	1	7	Ø16	M16	64	4	151
BP30-400400-0650-16	650										10			88		184
BP30-500500-0600-16	600	500	300	400	250	75	50	150	50	2	9	Ø16	M16	120	8	247
BP30-500500-0750-16	750										12			156		290
BP30-630630-0700-16	700	630	350	500	315	100	50	200	50	3	11	Ø16	M16	192	8	364
BP30-630630-0850-16	850										14			240		413
BP30-800800-0800-16	800	800	500	640	400	135	50	300	50	5	13	Ø16	M16	336	8	633
BP30-800800-1000-16	1000										17			432		733

*Special Design Welcome !



BP31

MC六面基座
HEXAGONAL CUBE

材质：HT250/QT500
热处理：退火
用处：适用于卧式和立式MC
优点：可以根据实际需求，自行钻孔加工制作专用治具。

Material:Cast Iron HT250/QT500
Heat treated(Normalized)
Application: HMC/VMC.
Features: Ready to accept a hole pattern for your special jig.

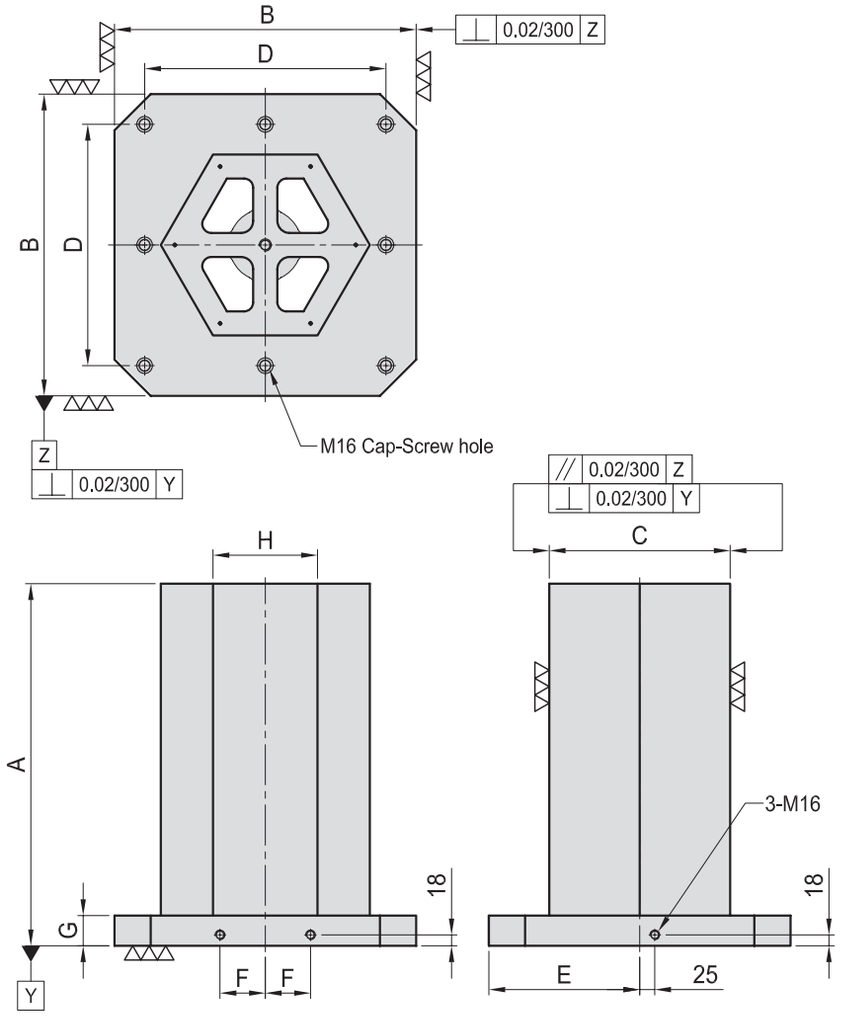

MODEL NO.	A	B	C	D	E	F	G	H	Mounting holes	kg
BP31-400400-0500	500	400	250	320	200	55	50	144	4	151
BP31-400400-0650	650									183
BP31-500500-0600	600	500	300	400	250	75	50	173	8	233
BP31-500500-0750	750									272
BP31-630630-0700	700	630	350	500	315	100	50	202	8	361
BP31-630630-0850	850									408
BP31-800800-0800	800	800	500	640	400	135	50	289	8	619
BP31-800800-1000	1000									713

*Special Design Welcome !



BP32

MC六面基座 HEXAGONAL CUBE

材质：HT250/QT500
热处理：退火
用处：适用于卧式和立式MC
优点：以孔定位方式，利用标准化治具零件，可以快速组合成一套符合需求的治具。

Material:Cast Iron HT250/QT500
Heat treated(Normalized)
Application: HMC/VMC.
Features: Alignment bushing & thread insert at every holelocation, easily adapts to standardized jig components.

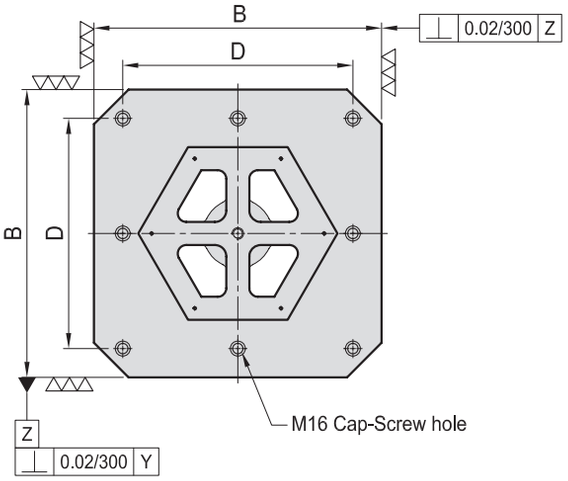

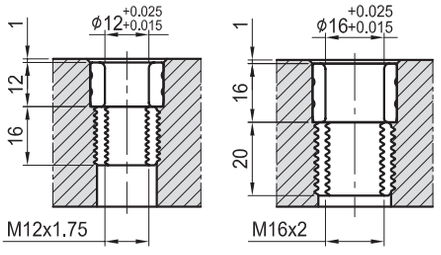

Figure T

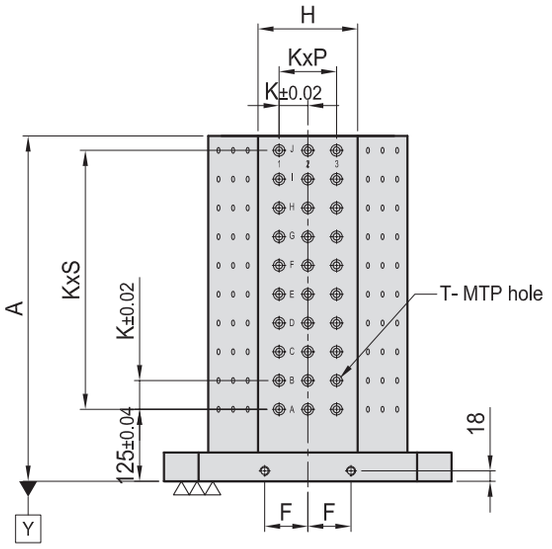

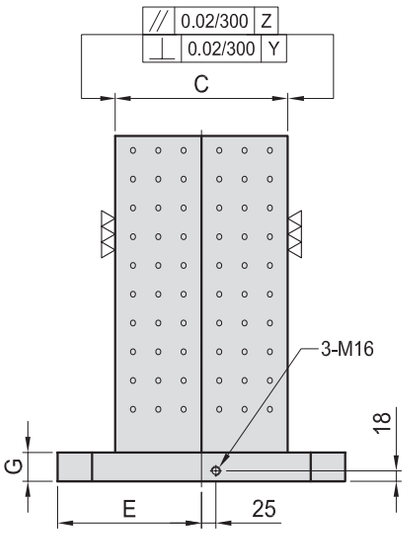

MODEL NO.	A	B	C	D	E	F	G	H	K	P	S	T		MTP	Mounting holes	kg
BP32-400400-0500-12	500	400	250	320	200	55	50	144	50	1	7	Ø12	M12	96	4	149
BP32-400400-0650-12	650										10			132		180
BP32-500500-0600-12	600	500	300	400	250	75	50	173	50	2	9	Ø12	M12	180	8	228
BP32-500500-0750-12	750										12			234		267
BP32-630630-0700-12	700	630	350	500	315	100	50	202	50	2	11	Ø12	M12	216	8	356
BP32-630630-0850-12	850										14			270		407
BP32-800800-0800-12	800	800	500	640	400	135	50	289	50	4	13	Ø12	M12	420	8	609
BP32-800800-1000-12	1000										17			540		700

MODEL NO.	A	B	C	D	E	F	G	H	K	P	S	T		MTP	Mounting holes	kg
BP32-400400-0500-16	500	400	250	320	200	55	50	144	50	1	7	Ø16	M16	96	4	147
BP32-400400-0650-16	650										10			132		177
BP32-500500-0600-16	600	500	300	400	250	75	50	173	50	2	9	Ø16	M16	180	8	224
BP32-500500-0750-16	750										12			234		262
BP32-630630-0700-16	700	630	350	500	315	100	50	202	50	2	11	Ø16	M16	216	8	351
BP32-630630-0850-16	850										14			270		396
BP32-800800-0800-16	800	800	500	640	400	135	50	289	50	4	13	Ø16	M16	420	8	600
BP32-800800-1000-16	1000										17			540		688

*Special Design Welcome !



BP33

MC八面基座 OCTAGONAL CUBE

材质：HT250/QT500
热处理：退火
用处：适用于卧式和立式MC
优点：可以根据实际需求，自行钻孔加工制作专用治具。

Material:Cast Iron HT250/QT500
Heat treated(Normalized)
Application: HMC/VMC.
Features: Ready to accept a hole pattern for your special jig.

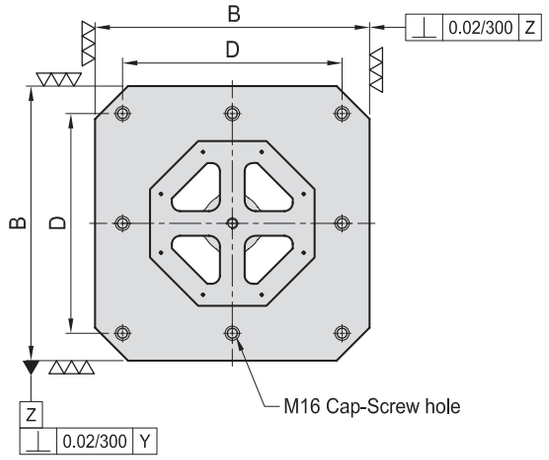

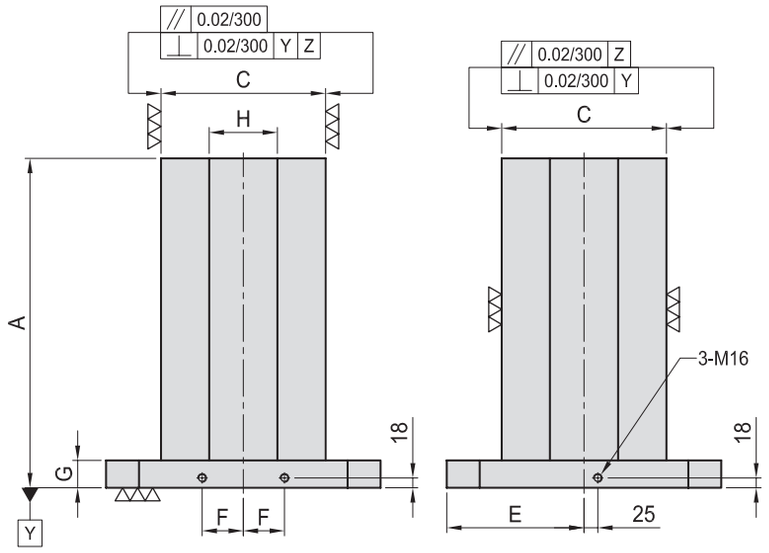

MODEL NO.	A	B	C	D	E	F	G	H	Mounting holes	kg
BP33-400400-0500	500	400	250	320	200	55	50	103	4	148
BP33-400400-0650	650									179
BP33-500500-0600	600	500	300	400	250	75	50	124	8	227
BP33-500500-0750	750									264
BP33-630630-0700	700	630	350	500	315	100	50	145	8	350
BP33-630630-0850	850									395
BP33-800800-0800	800	800	500	640	400	135	50	207	8	622
BP33-800800-1000	1000									711

*Special Design Welcome !



BP34

MC八面基座 OCTAGONAL CUBE

材质：HT250/QT500
热处理：退火
用处：适用于卧式和立式MC
优点：以孔定位方式，利用标准化治具零件，可以快速组合成一套符合需求的治具。

Material:Cast Iron HT250/QT500
Heat treated(Normalized)
Application: HMC/VMC.
Features: Alignment bushing & thread insert at every holelocation, easily adapts to standardized jig components.

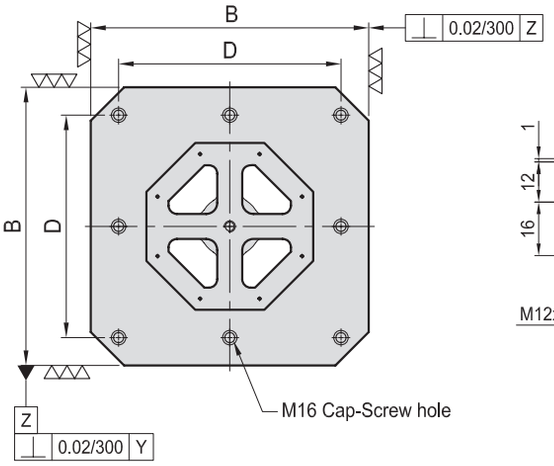

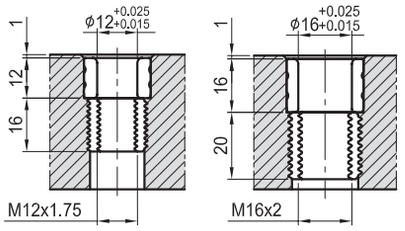

Figure T

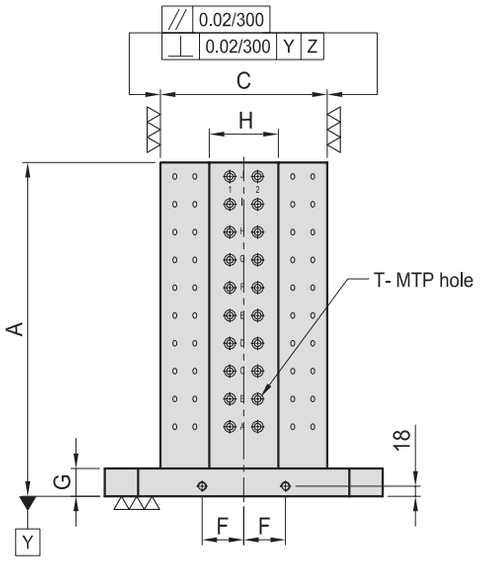

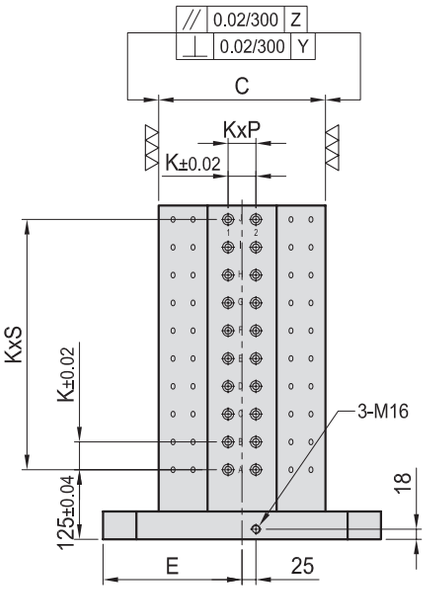

MODEL NO.	A	B	C	D	E	F	G	H	K	P	S	T		MTP	Mounting holes	kg
BP34-400400-0500-12	500	400	250	320	200	55	50	103	50	1	7	Ø12	M12	128	4	145
BP34-400400-0650-12	650										10			176		175
BP34-500500-0600-12	600	500	300	400	250	75	50	124	50	1	9	Ø12	M12	160	8	223
BP34-500500-0750-12	750										12			208		259
BP34-630630-0700-12	700	630	350	500	315	100	50	145	50	1	11	Ø12	M12	192	8	345
BP34-630630-0850-12	850										14			240		389
BP34-800800-0800-12	800	800	500	640	400	135	50	207	50	3	13	Ø12	M12	448	8	611
BP34-800800-1000-12	1000										17			576		697

MODEL NO.	A	B	C	D	E	F	G	H	K	P	S	T		MTP	Mounting holes	kg
BP34-400400-0500-16	500	400	250	320	200	55	50	103	50	1	7	Ø16	M16	128	4	142
BP34-400400-0650-16	650										10			176		171
BP34-500500-0600-16	600	500	300	400	250	75	50	124	50	1	9	Ø16	M16	160	8	219
BP34-500500-0750-16	750										12			208		255
BP34-630630-0700-16	700	630	350	500	315	100	50	145	50	1	11	Ø16	M16	192	8	341
BP34-630630-0850-16	850										14			240		384
BP34-800800-0800-16	800	800	500	640	400	135	50	207	50	3	13	Ø16	M16	448	8	601
BP34-800800-1000-16	1000										17			576		685

*Special Design Welcome !



BP35

H型垫块 H/CAST SECTION

材质：HT250/QT500
热处理：退火
优点：因为工件的高低不同给予辅助用。

Material:Cast Iron HT250/QT500
Heat treated(Normalized)
Features: Easily adapts to standardized jig components

MODEL NO.	A	B	C	M	N	kg
BP35-085085-0100-12	85	100	85	M12	M12	3.64
BP35-085085-0125-12		125				
BP35-085085-0100-16	85	100	85	M16	M16	4.13
BP35-085085-0125-16		125				

*Special Design Welcome !

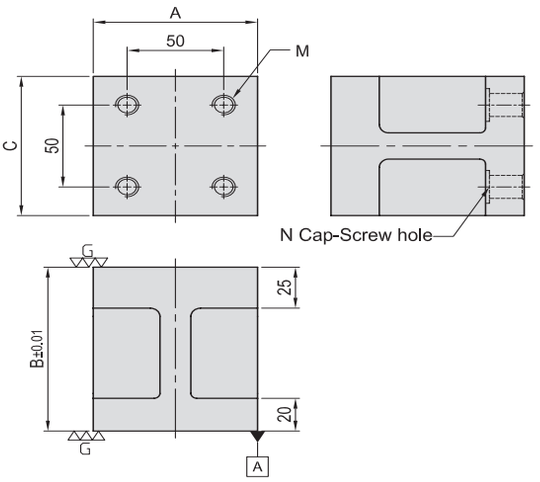

BP36

H型垫块 H/CAST SECTION



材质：HT250/QT500
热处理：退火
优点：因为工件的高低不同给予辅助用。

Material:Cast Iron HT250/QT500
Heat treated(Normalized)
Features: Easily adapts to standardized jig components

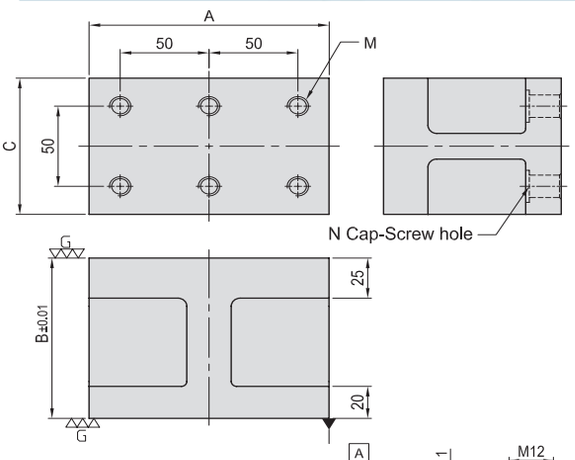

MODEL NO.	A	B	C	M	N	kg
BP36-135085-0100-12	135	100	85	M12	M12	5.76
BP36-135085-0125-12		125				
BP36-135085-0100-16	135	100	85	M16	M16	6.53
BP36-135085-0125-16		125				

*Special Design Welcome !

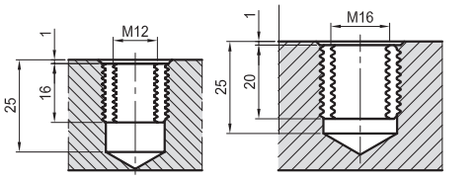

Figure M

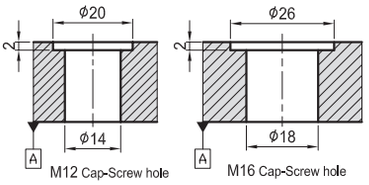

Figure N

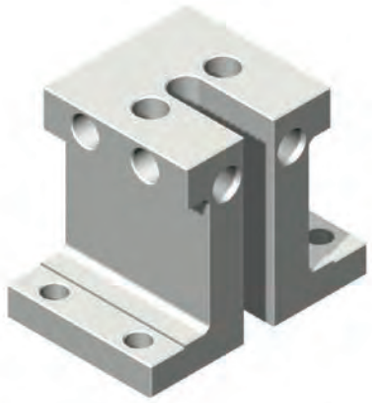

BP37

H型垫块　H/CAST SECTION

材质：HT250/QT500
热处理：退火
优点：因为工件的高低不同给予辅助用。

Material:Cast Iron HT250/QT500
Heat treated(Normalized)
Features: Easily adapts to standardized jig components

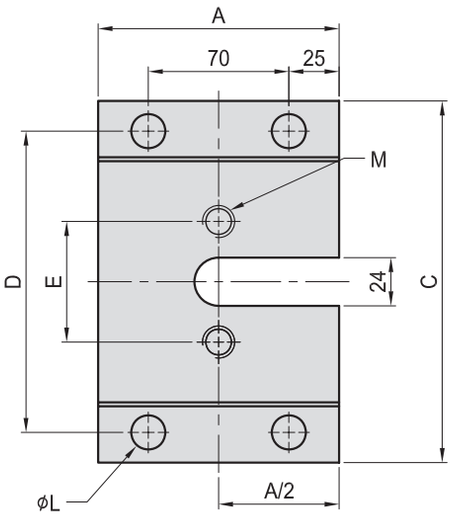

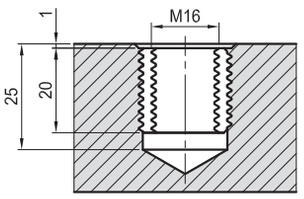

Figure M

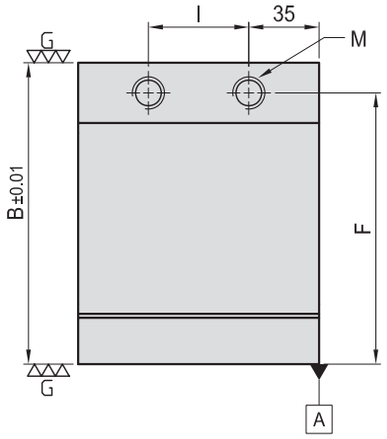

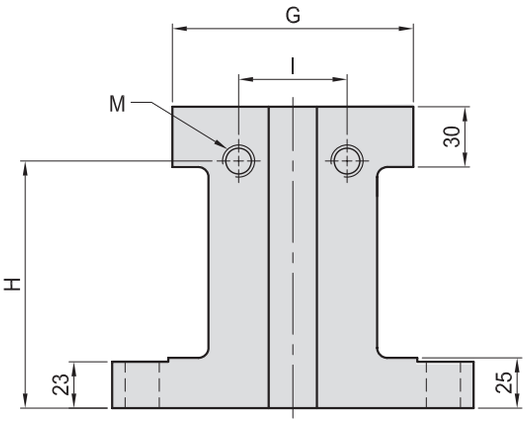

MODEL NO.	A	B	C	D	E	F	G	H	I	M	L	kg
BP37-120180-0150-16	120	150	180	150	60	135	120	123	50	M16	17	15.5

*Special Design Welcome !

可以按需定制的产品
Products that can be customized according to needs

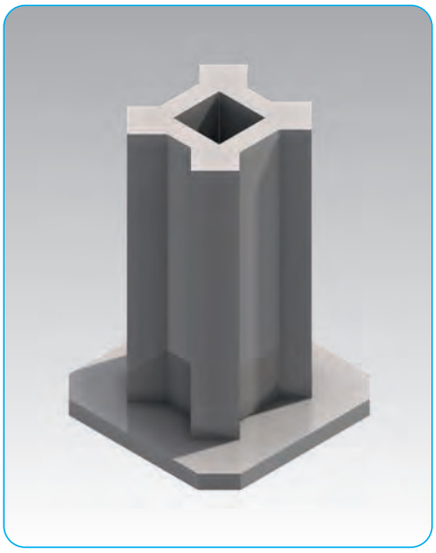
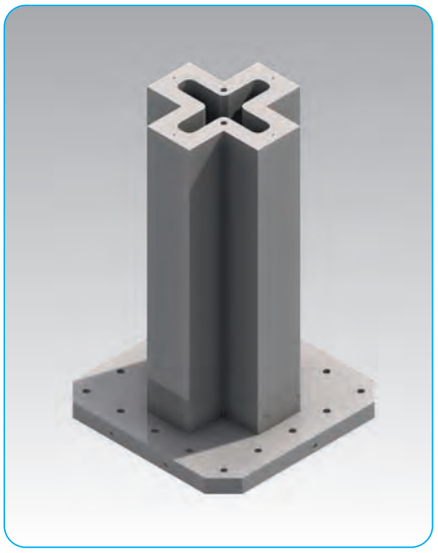


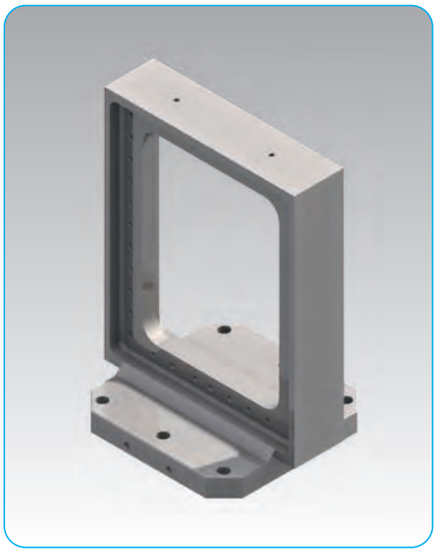
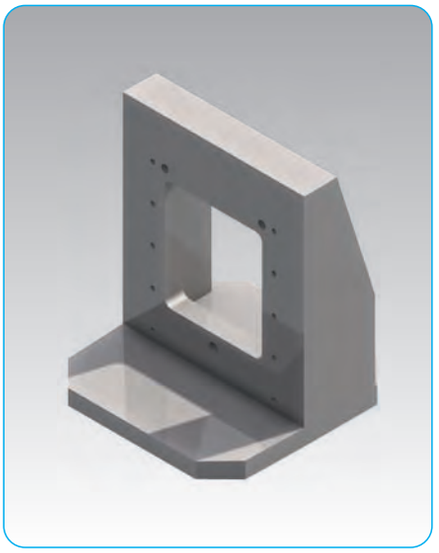

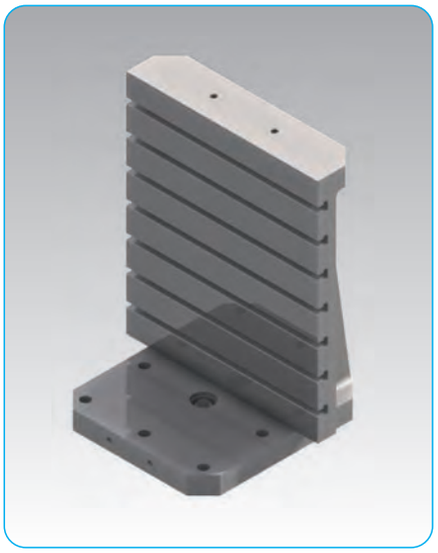
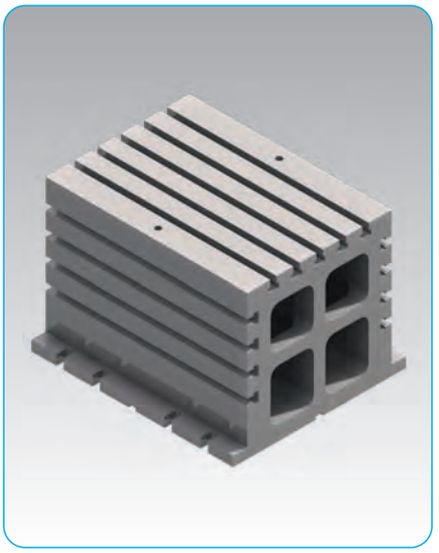

模块化快换夹持系统

Modular quick-change clamping system





模块化工装 Modular tooling

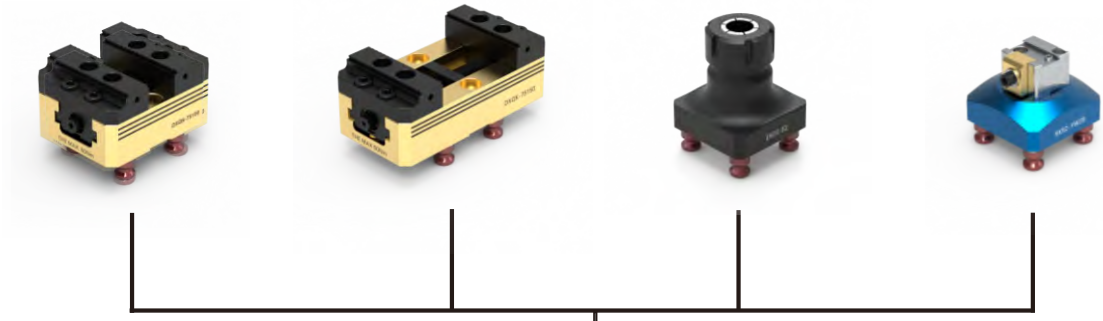

节省换装时间
数秒内即可高精度更换夹持工具，固定装置和工件
模块化
可组合零点工装种类繁多，可随时扩展
简便性
通过拧紧螺钉或快速释放紧固件进行机械夹持

Save time when changing clothes
High-precision replacement of clamping tools, fixtures and workpieces in seconds
Modular
There are many kinds of combinable zero-point tooling, which can be expanded at any time.
Simplicity
Mechanical clamping by tightening screws or quick release fasteners



作为机床工作台和夹紧装置之间的接口，NBD的零点快换系统具有多种变换。它可以在 3轴，4轴工作台和第5 轴的立式和卧式加工中心中普遍使用。

As the interface between the machine tool table and the clamping device, NBD's zero-point quick change system has a variety of transformations. It can be universally used in vertical and horizontal machining centers with 3 -axis, 4-axis tables and 5th axis.

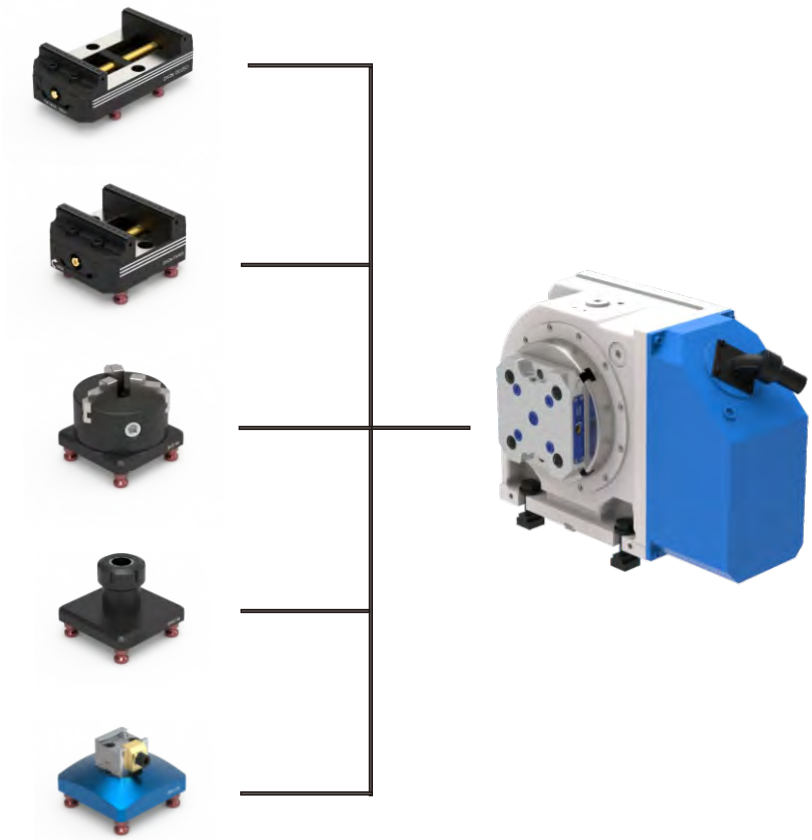

四孔定位器 Four hole locator

SLTA52-108



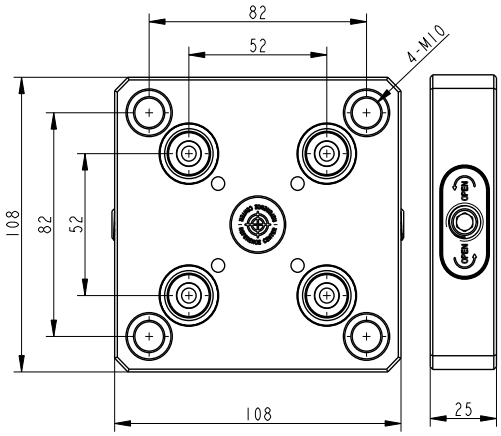

描述 Describe

尺寸: 108×108×25mm
重复定位: 0.005mm
锁紧力: 17KN (4个螺栓)
材质: 铝+硬化不锈钢
重量: 1.1Kg

Size: 108×108×25mm
Repeat positioning: 0.005mm
Locking force: 17KN (4 bolts)
Material: Hard aluminum +steel ring
Weight: 1.1Kg

SLTA9652-155



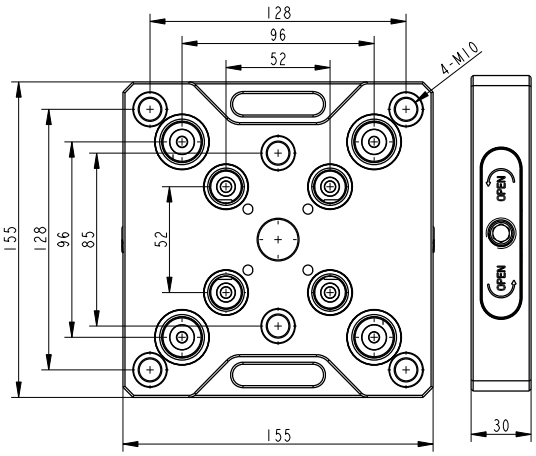

描述 Describe

尺寸: **155×155×30**mm
重复定位: 0.005mm
锁紧力: 18KN (4个螺栓)
材质: 铝+硬化不锈钢
重量: 2.2Kg

Size: 155×155×30mm
Repeat positioning: 0.005mm
Locking force: 18KN (4 bolts)
Material: Hard aluminum +steel ring
Weight: 2.2Kg

四孔定位器 Four hole locator

SL96-S155



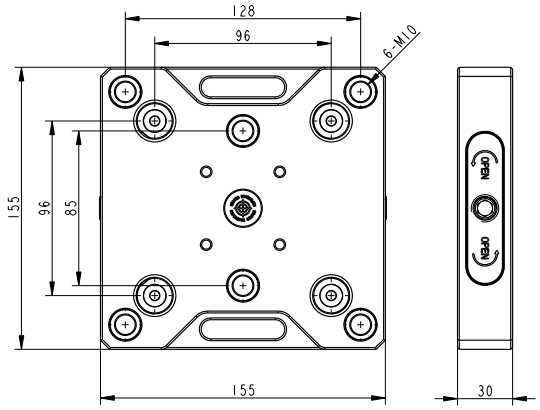

描述 Describe

尺寸:155×155×30mm
重复定位: 0.005mm
锁紧力: 22KN（6个螺栓)
材质: 硬化不锈钢
重量: 4.8Kg
Size: 155×155×30mm
Repeat positioning: 0.005mm
Locking force: 22KN (6 bolts)
Material: Hardened stainless steel
Weight: 4.8Kg

SL96-178



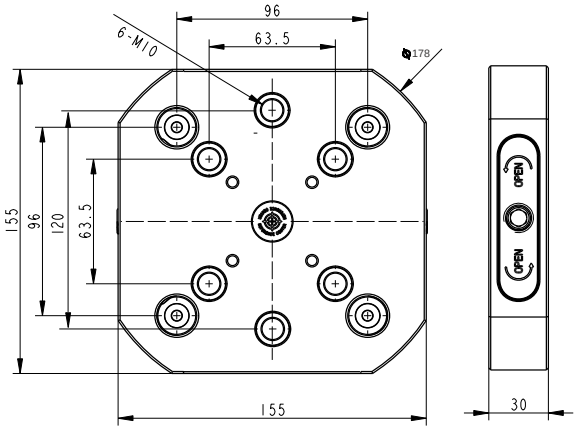

描述 Describe

尺寸:Φ178×30mm
重复定位: 0.005mm
锁紧力: 22KN（6个螺栓)
材质: 硬化不锈钢
重量: 4.3Kg
Size: Φ178×30mm
Repeat positioning: 0.005mm
Locking force: 22KN (6 bolts)
Material: Hardened stainless steel
Weight: 4.3Kg

SL96-S175



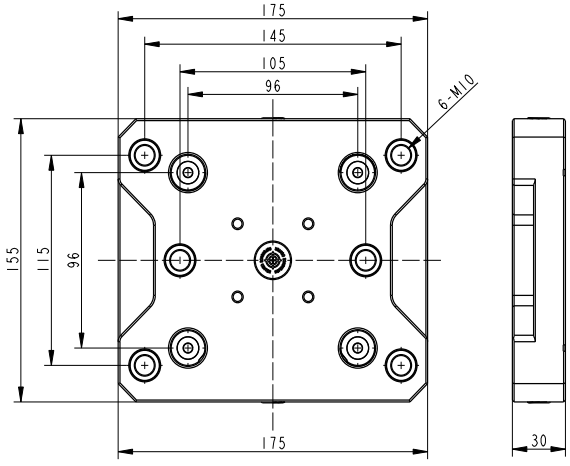

描述 Describe

尺寸: 175×155×30mm
重复定位: 0.005mm
锁紧力: 22KN（6个螺栓)
材质: 硬化不锈钢
重量: 5Kg
Size: 175×155×30mm
Repeat positioning: 0.005mm
Locking force: 22KN (6 bolts)
Material: Hardened stainless steel
Weight: 5 Kg

兼容型定位板 Compatible positioning locator

SL9652-200



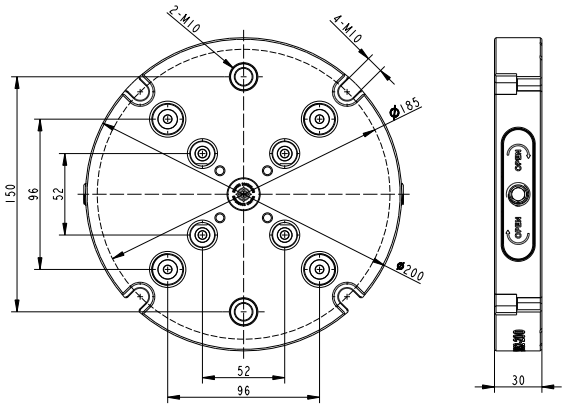

描述 Describe

尺寸: Φ200×30mm 重
复定位: 0.005mm
锁紧力: 20KN（4个螺栓)
材质: 硬化不锈钢
重量: 6.5Kg

Size: Φ200×30mm
Repeat positioning: 0.005mm
Locking force: 20KN (4 bolts)
Material: Hardened stainless steel
Weight: 6.5Kg

SL96-0090



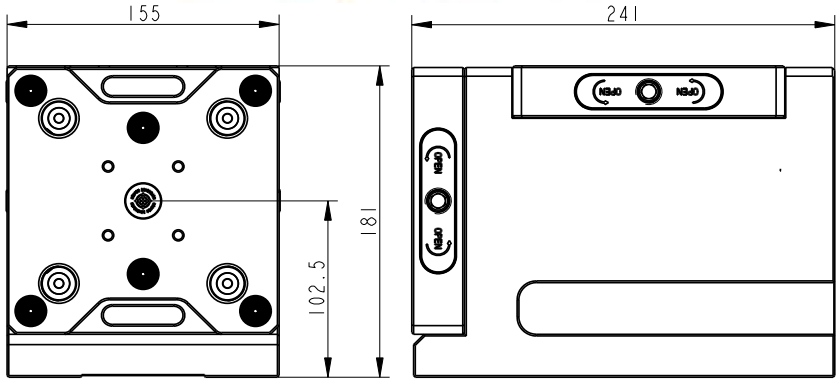

描述 Describe

尺寸: 241×181×255mm
重复定位: 0.005mm
锁紧力: 22KN
材质: 硬化不锈钢+铝
重量: 24Kg

Size: 241×181×255mm
Repeat positioning: 0.005mm
Locking force: 22KN
Material: Hardened Stainless Steel + AL
Weight: 24Kg

SL96-276



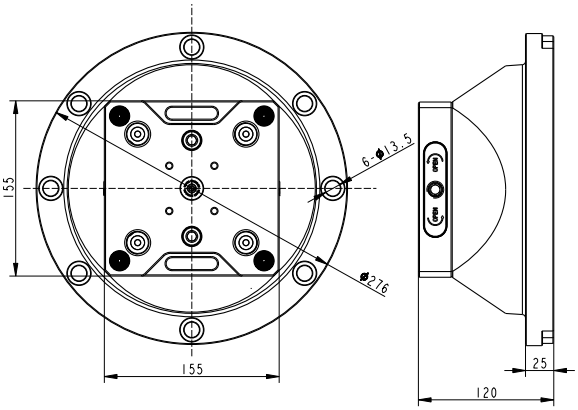

描述 Describe

尺寸: Φ276×120
重复定位: 0.005mm
锁紧力: 22KN（6个螺栓)
材质: 铝+硬化不锈钢
重量: 15Kg

Size: Φ276×120
Repeat positioning: 0.005mm
Locking force: 22KN (6 bolts)
Material: Aluminum + Hardened Stainless Steel
Weight: 15Kg

四孔定位器 Four hole locator

SL52-108



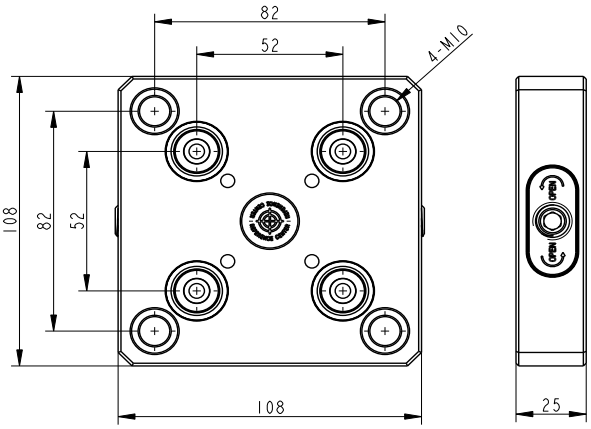

描述 Describe

尺寸: 108×108×25mm
重复定位: 0.005mm
锁紧力: 18KN（4个螺栓)
材质: 硬化不锈钢
重量: 1.9Kg

Size: 108×108×25mm
Repeat positioning: 0.005mm
Locking force: 18KN (4 bolts)
Material: Hardened stainless steel
Weight: 1.9Kg

SL52-S170



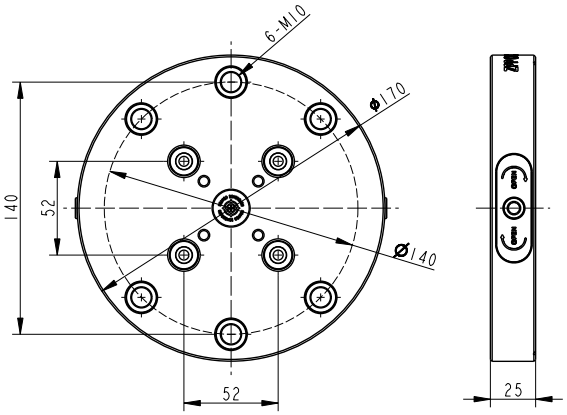

描述 Describe

尺寸: Φ170×25mm
重复定位: 0.005mm
锁紧力: 18KN（6个螺栓)
材质: 硬化不锈钢
重量: 3.7Kg

Size: Φ170×25mm
Repeat positioning: 0.005mm
Locking force: 18KN (6 bolts)
Material: Hardened stainless steel
Weight: 3.7Kg

SL52-120



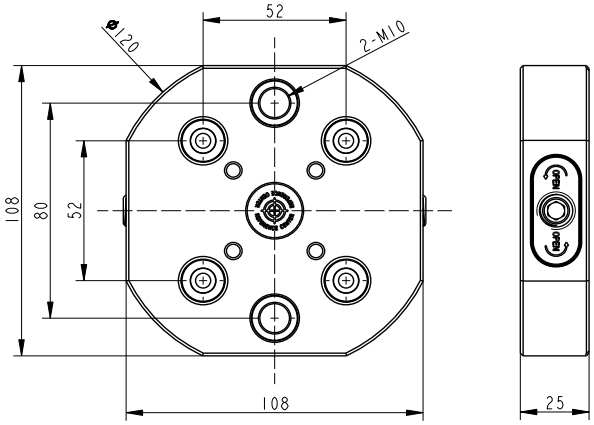

描述 Describe

尺寸: Φ120×25mm 重复定位: 0.005mm
锁紧力: 18KN（4个螺栓) 材质: 硬化不锈钢
重量: 1.8Kg

Size: Φ120×25mm
Repeat positioning: 0.005mm
Locking force: 18KN (4 bolts)
Material: Hardened stainless steel
Weight: 1.8Kg

四孔定位器 Four hole locator

SL52-T96



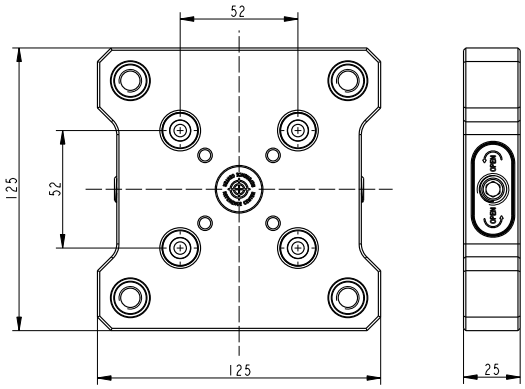

描述 Describe

尺寸: 125×125×25mm
重复定位: 0.005mm
锁紧力: 18KN（4个螺栓)
材质: 铝+硬化不锈钢
重量: 2.5Kg

Size: 125×125×25mm
Repeat positioning: 0.005mm Locking force: 18KN (4 bolts)
Material: Hardened stainless steel
Weight: 2.5Kg

SL52-9096



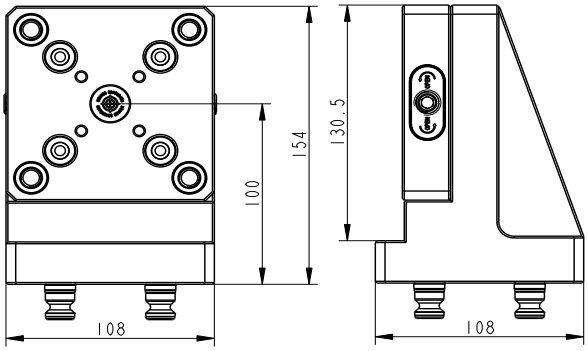

描述 Describe

尺寸: 154×108×108mm
重复定位: 0.005mm
锁紧力: 18KN
材质: 铝+硬化不锈钢
重量: 4.5Kg

Size: 154×108×108mm
Repeat positioning: 0.005mm
Locking force: 18KN
Material: Aluminum + Hardened Stainless Steel
Weight: 4.5Kg

SL96-9096



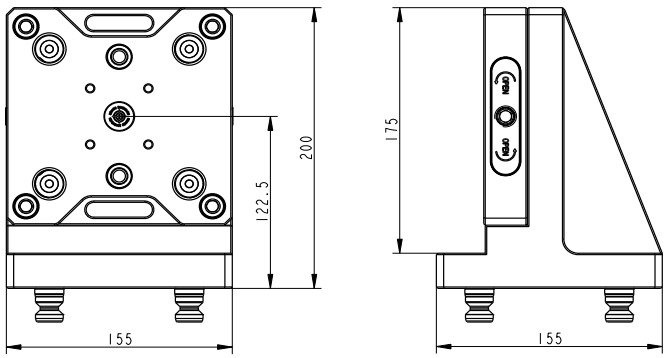

描述 Describe

尺寸: 200×155×155mm
重复定位: 0.005mm
锁紧力: 22KN
材质: 铝+硬化不锈钢
重量: 9.5Kg

Size: 200×150×155mm
Repeat positioning: 0.005mm
Locking force: 22KN
Material: aluminum +hard steel
Weight: 9.5Kg

双工位四孔定位器 Dual station four hole positioner

SL52-210



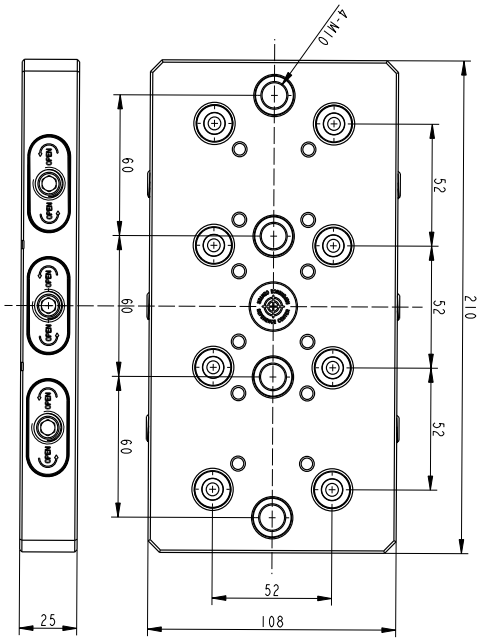

描述 Describe

尺寸: 210×108×25mm
重复定位: 0.005mm
锁紧力: 18KN（4个螺栓) 材质: 硬化不锈钢
重量: 3.6Kg

Size: 210×108×25mm
Repeat positioning: 0.005mm
Locking force: 18KN (4 bolts)
Material: Hardened Stainless Steel
Weight: 3.6Kg

SL96-340

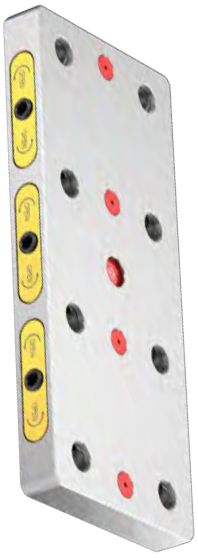

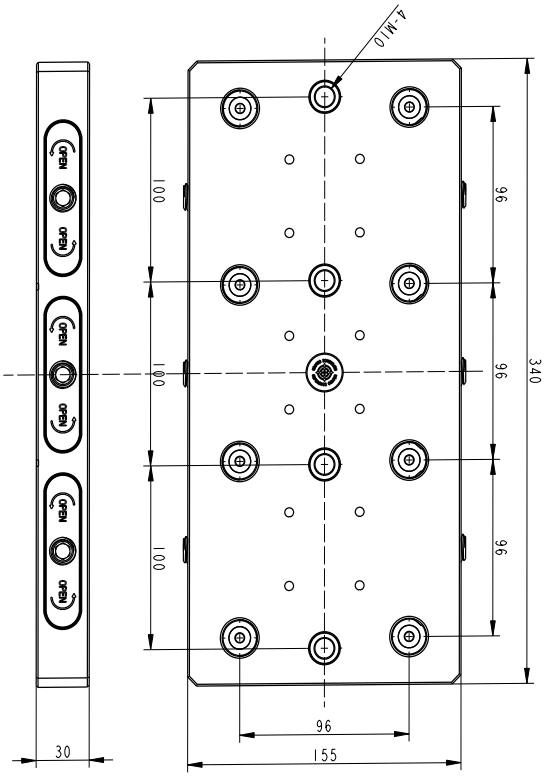

描述 Describe

尺寸: 340×155×30mm
重复定位: 0.005mm
锁紧力: 22KN（4个螺栓)
材质: 硬化不锈钢
重量: 11.5Kg

Size: 340×155×30mm
Repeat positioning: 0.005mm
Locking force: 22KN (4 bolts)
Material: Hardened Stainless Steel
Weight: 11.5Kg

气动四孔定位器

Pneumatic four-hole positioner

QSL96-155



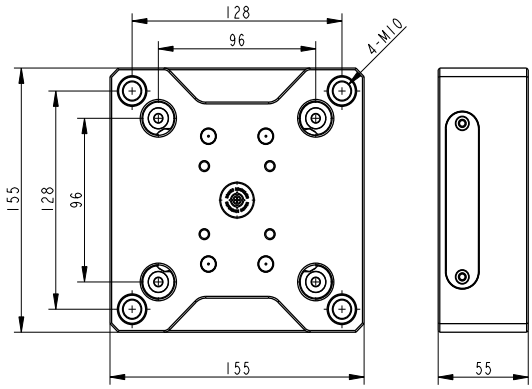

描述 Describe

尺寸:155×155×155mm
重复定位: 0.005mm
材质: 硬化不锈钢
重量: 8.0Kg

Size: 155×155×155mm
Repeat positioning: 0.005mm
Material: Hardened Stainless Steel
Weight: 8.0Kg

QSL52-108



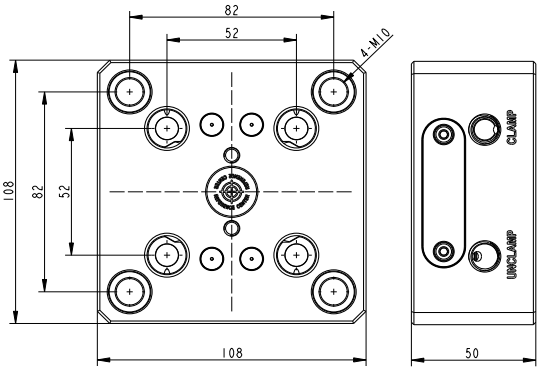

描述 Describe

尺寸:108×108×50mm
重复定位: 0.005mm
材质: 硬化不锈钢
重量: 3.3Kg

Size: 108×108×50mm
Repeat positioning: 0.005mm
Material: Hardened Stainless Steel
Weight: 3.3Kg

燕尾夹 Dovetail clip

Y W12



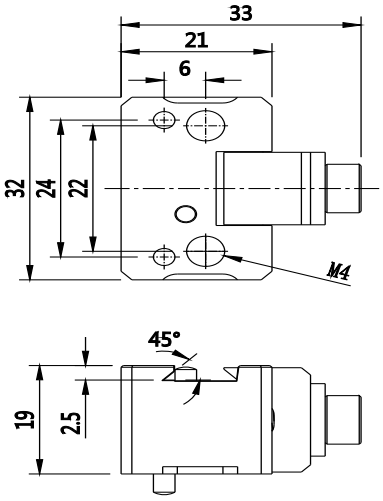

描述 Describe

尺寸: 21×32×19mm
材质: 硬化不锈钢
夹持范围: 12-25mm
燕尾深度: 2.54mm
最大扭矩: 8Nm
重量: 0.1Kg

Size: 21×32×19mm
Material: Hardened stainless steel
Clamping range: 12-25mm
Dovetail depth: 2.54mm
Maximum torque: 8Nm
Weight: 0.1Kg

Y W25



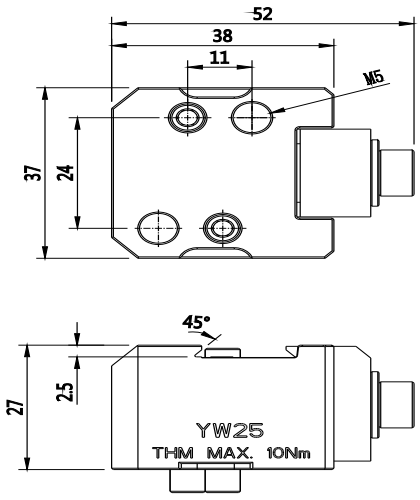

描述 Describe

尺寸: 21×32×19mm
材质: 硬化不锈钢
夹持范围: 25-70mm
燕尾深度: 2.54mm
最大扭矩: 10Nm
重量: 0.25Kg

Size: 21×32×19mm
Material: Hardened stainless steel
Clamping range: 25-70mm
Dovetail depth: 2.54mm
Maximum torque: 10Nm
Weight: 0.25Kg

Y W50



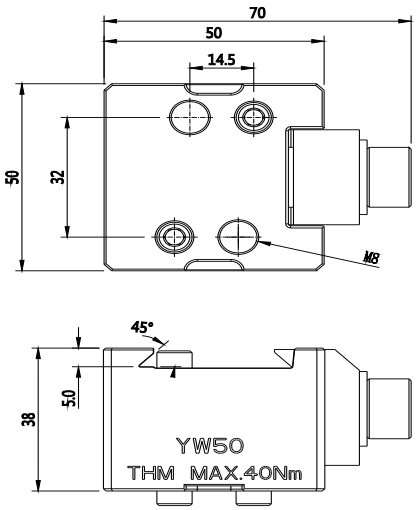

描述 Describe

尺寸: 50×50×38mm
材质: 硬化不锈钢
夹持范围: 50mm以上
燕尾深度: 5.08mm
最大扭矩: 40Nm
重量: 0.65Kg

Size: 50×50×38mm
Material: Hardened stainless steel
Clamping range: 50mm or more
Dovetail depth: 5.08mm
Maximum torque: 40Nm
Weight: 0.65Kg

52型燕尾夹 Dovetail clip

YW12-52

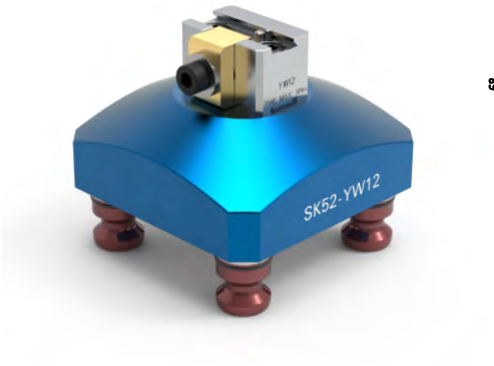

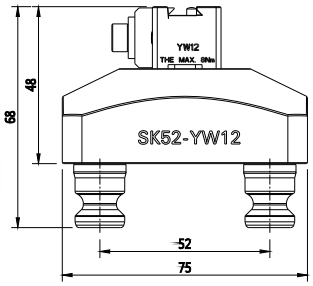

描述 Describe

尺寸: 75×75×68mm
材质: 硬化不锈钢+铝
夹持范围: 12-25mm
燕尾深度: 2.54mm
最大扭矩: 8Nm
重量: 0.6Kg

Size: 75×75×68mm
Material: Hardened stainless steel+ aluminum
Clamping range: 12-25mm
Dovetail depth: 2.54mm
Maximum torque: 8Nm
Weight: 0.6Kg

YW25-52

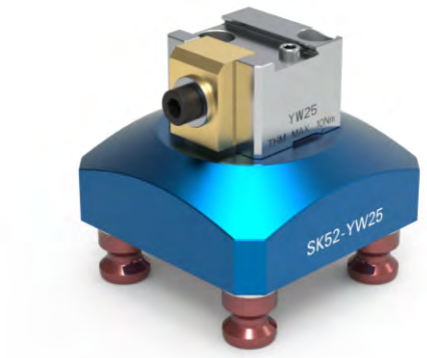

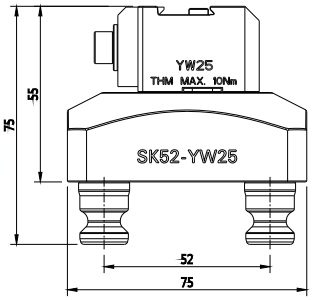

描述 Describe

尺寸: 75×75×75mm
材质: 硬化不锈钢+铝
夹持范围: 12-25mm
燕尾深度: 2.54mm
最大扭矩: 10Nm
重量: 0.8Kg

Size: 75×75×75mm
Material: Hardened stainless steel + aluminum
Clamping range: 12-25mm
Dovetail depth: 2.54mm
Maximum torque: 10Nm
Weight: 0.8Kg

YW50-52

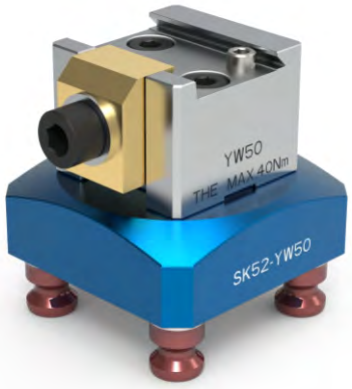

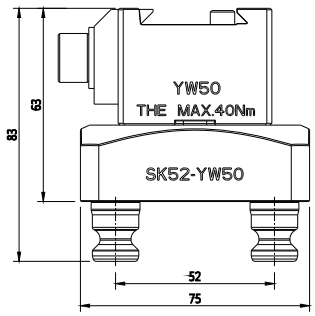

描述 Describe

尺寸: 75×75×83mm
材质: 硬化不锈钢+铝
夹持范围: 50mm以上
燕尾深度: 5.08mm
最大扭矩: 40Nm
重量: 1.1Kg

Size: 75×75×83mm
Material: Hardened stainless steel + aluminum
Clamping range: 50mm or more
Dovetail depth: 5.08mm
Maximum torque: 40Nm
Weight: 1.1Kg

96型燕尾夹 Dovetail clip

YW12-96

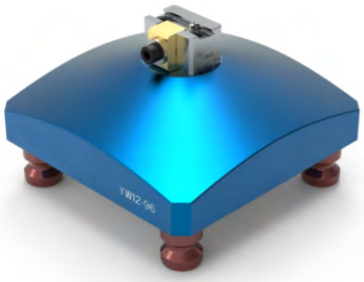

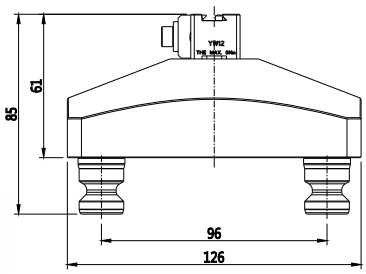

描述 Describe

尺寸: 126×126×85mm
材质: 硬化不锈钢+铝
夹持范围: 12-25mm
燕尾深度: 2.54mm
最大扭矩: 8Nm
重量: 1.7Kg

Size: 126×126×85mm
Material: Hardened stainless steel + aluminum
Clamping range: 12-25mm
Dovetail depth: 2.54mm
Maximum torque: 8Nm
Weight: 1.7Kg

YW25-96

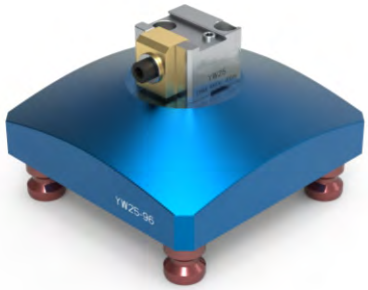

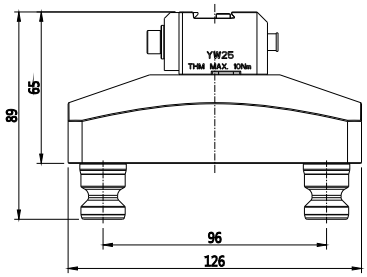

描述 Describe

尺寸: 126×126×89mm
材质: 硬化不锈钢+铝
夹持范围: 12-25mm
燕尾深度: 2.54mm
最大扭矩: 10Nm
重量: 2.3Kg

Size: 126×126×89mm
Material: Hardened stainless steel + aluminum
Clamping range: 12-25mm
Dovetail depth: 2.54mm
Maximum torque: 10Nm
Weight: 2.3Kg

YW50-96

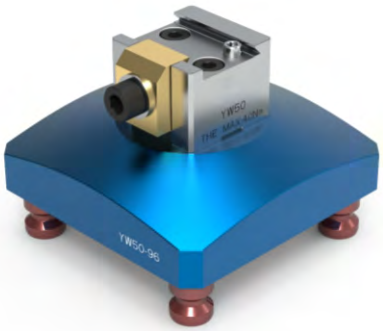

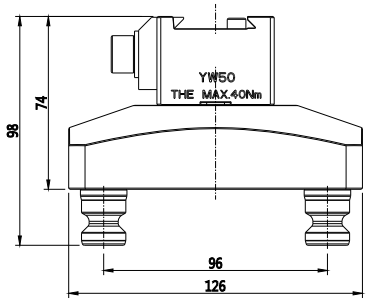

描述 Describe

尺寸: 126×126×98mm
材质: 硬化不锈钢+铝
夹持范围: 50mm以上
燕尾深度: 5.08mm
最大扭矩: 40Nm
重量: 2.3Kg

Size: 126×126×98mm
Material:Hardened stainless steel + aluminum
Clamping range: 50mm or more
Dovetail depth: 5.08mm
Maximum torque: 40Nm
Weight: 2.3Kg

真空吸盘 Vacuum suction cup

V247-40

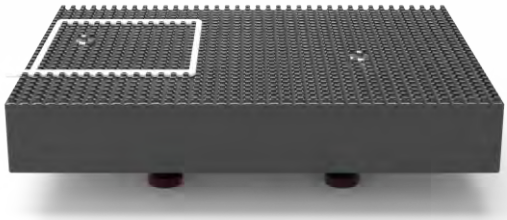

描述 Describe

尺寸: 247×191*39mm
材质: AL
重量: 5.5Kg

带96拉钉系统

Size:
247×191*39mm
Material: AL
Weight: 5.5Kg
With 96 rivet system

真空动力装置



描述 Describe

真空动力装置 (VPU)是系统的核心。
真空从这个单一的单元产生、打开和关闭以及监控。压缩空气以 0.65Mpa的压力进入，转换为 28″ Hg 的真空功率——等于或优于传统真空泵，并且无需过滤器或冷却剂收集器。它是一种低流量、高水平泵旨在与无孔工件一起使用。最重要的是，它仅消耗 0.02CMM 的空气（最大真空流量为 0.028CMM）.

The vacuum power unit (VPU) is the heart of the system.
Vacuum is generated, turned on and off and monitored from this single unit. Compressed air enters at a pressure of 0.65Mpa, converting to 28″ Hg of vacuum power – equal to or better than conventional vacuum pumps, and without the need for filters or coolant collectors. It is a low-flow, high-level pump designed to work with no Use it with hole workpieces. Most importantly, it only consumes 0.02CMM of air (maximum vacuum flow is 0.028CMM).

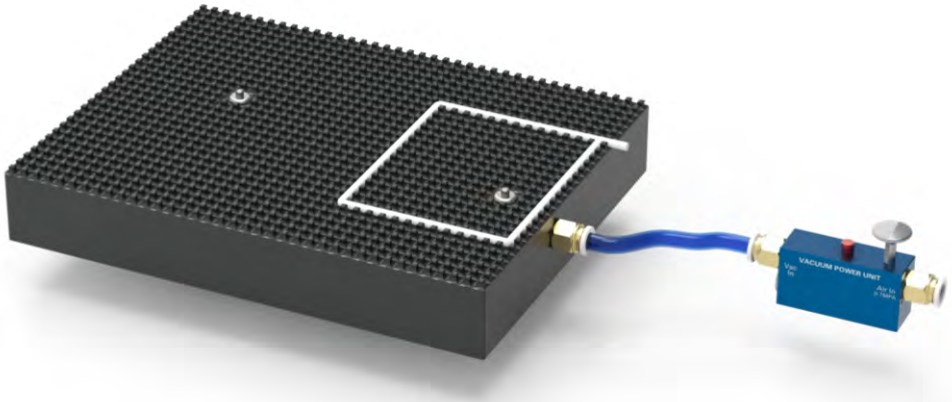

三面工装塔 Three-sided tooling tower

SK52-S160



描述 Describe

尺寸: Φ160×167mm
材质: 铝+钢
重量: 6.8Kg

底部预制96系统拉钉孔，可快速的在零点夹紧系统中进行精确夹紧

Size: Φ160×167mm
Material: aluminum+steel
Weight: 6.8Kg
The bottom is prefabricated with 96 system rivet holes, which can quickly and accurately clamp in the zero-point clamping system.

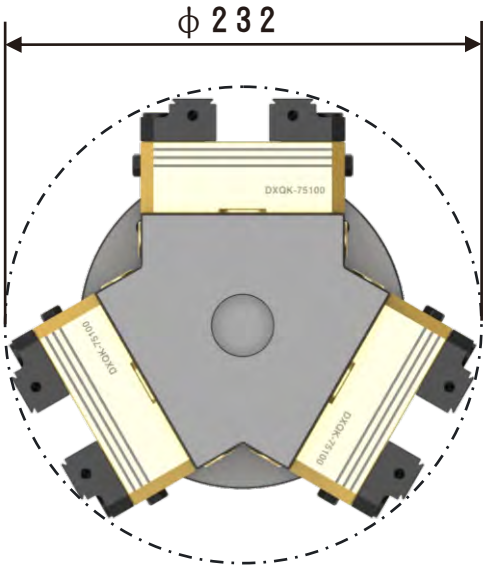

安装三个75100的虎钳

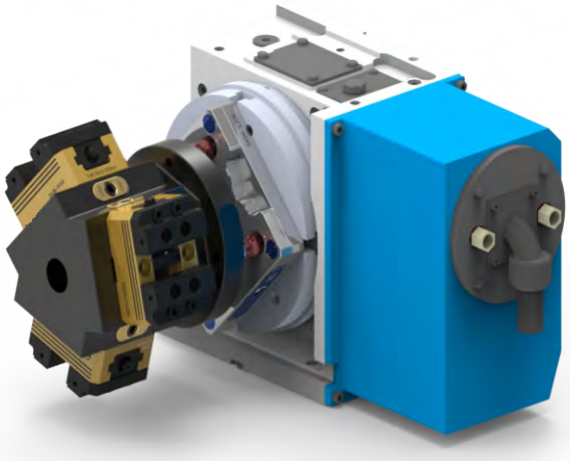

四面工装塔 Four-sided tooling tower

迷你型四面工装塔,应用于较小的4轴和5轴机床, 保持紧凑空间的同时提高生产率,最多可以安装8个虎钳,使机床可以在无人值守的情况下运行这样可以最大程度地减少装夹时间,并使作业人员可以操作多台机床.

75-A96



The mini four-sided tooling tower is used in smaller 4-axis and 5-axis machine tools to increase productivity while maintaining a compact space. Up to 8 vises can be installed, allowing the machine tool to operate unattended. This minimizes setup time and allows operators to operate multiple machine tools.

描述 Describe

尺寸: 126×126*200mm
材质: AL
重量: 6.5Kg

Size:
126×126*200mm
Material: AL
Weight: 6.5Kg

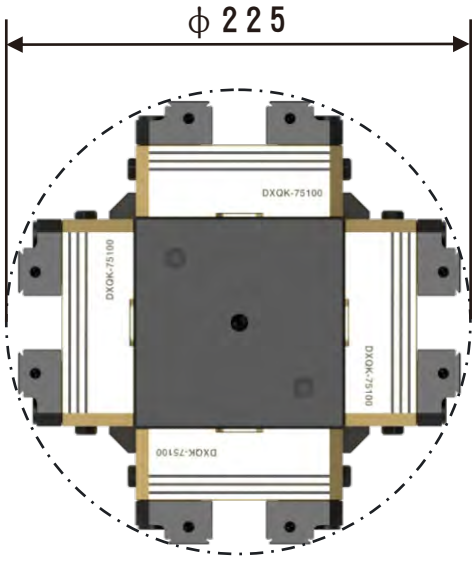

虎钳水平安装

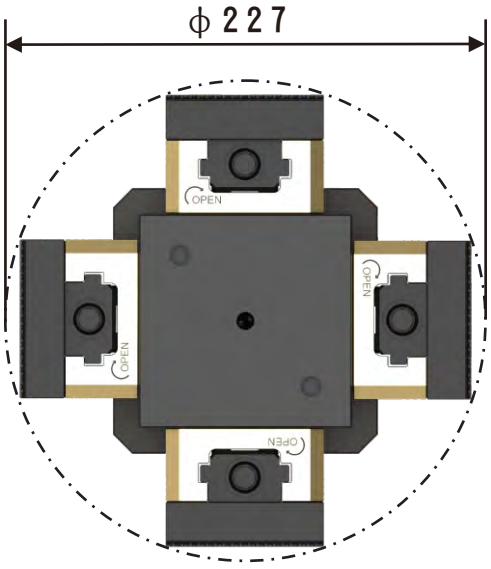

虎钳垂直安装

三面金字塔 Three sided pyramid

高强度，铝制三面金字塔与集成的快换板，增加5轴机床的运行时间。减少换刀次数，延长主轴的精度.

SK96-D400

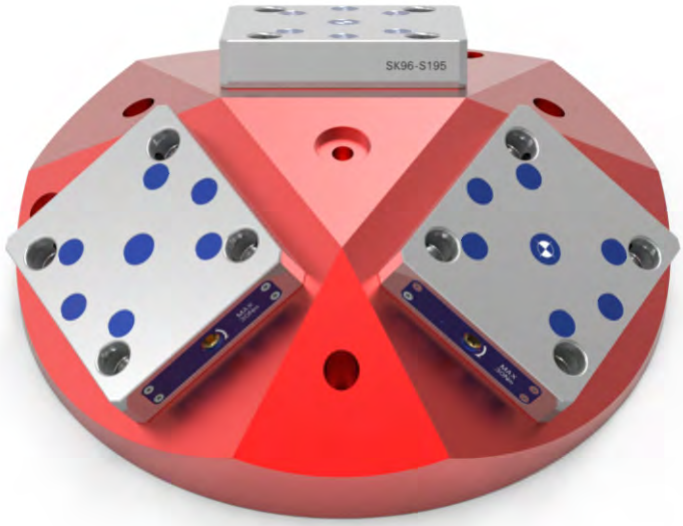

Size: Φ395×115mm
Material: aluminum
Weight: 32Kg
Angle: ∠30 degrees, suitable for inclinations of 120°
or above machines.
The bottom is prefabricated with 96 system rivet holes for quick
Precise clamping in zero-point clamping systems
Note: The machine brand and model are required when ordering to ensure the correct mounting hole locations.

High-strength, aluminum three-sided pyramid with integrated quick-change plates increases uptime on 5-axis machines.
Reduce the number of tool changes and extend the accuracy of the spindle.

描述 Describe

尺寸: Φ395×115mm
材质: 铝
重量: 32Kg
角度：∠30度 适用于倾斜度为120°
或以上的机器。

底部预制96系统拉钉孔，可快速的
在零点夹紧系统中进行精确夹紧
注意：订购时需要机器品牌和型号 ，以确保安装孔位正确。

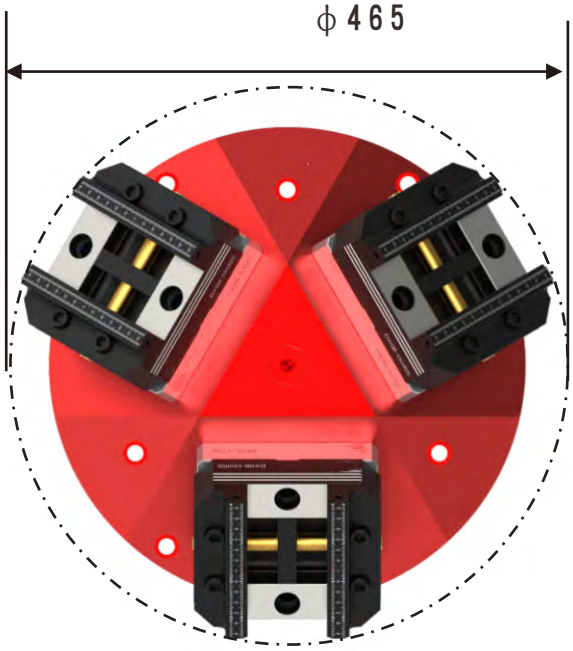

虎钳水平安装

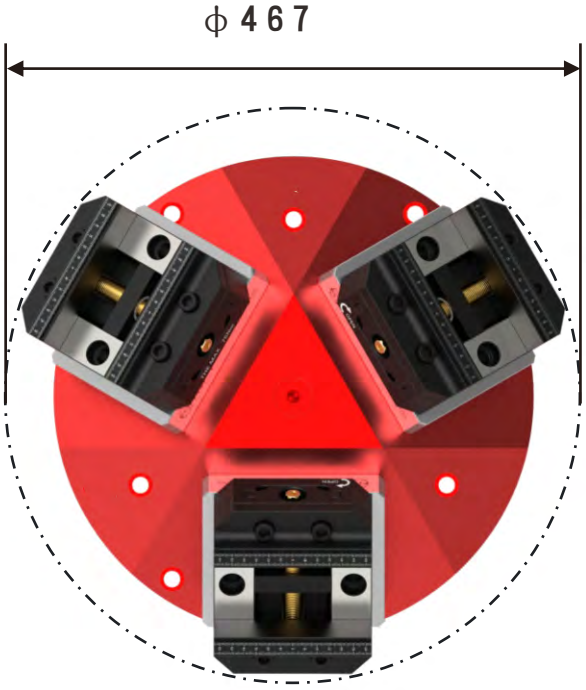

虎钳垂直安装

75系列定心虎钳 Self centering vise

DXQK-75100T



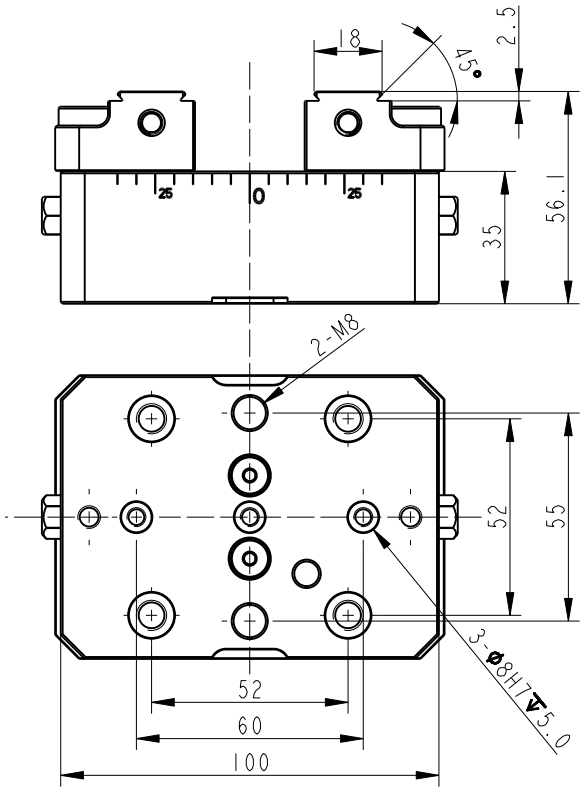

描述 Describe

尺寸: 75×100×56mm
正向夹持范围: 0-41mm
反向夹持范围: 41-76mm
钳体宽度: 75mm
最大扭矩: 60Nm@14KN
重量: 2.3Kg

Size: 75×100×56mm
Forward clamping range: 0-41mm
Reverse clamping range: 41-76mm
Clamp body width: 75mm
Maximum torque: 60Nm@14KN
Weight: 2.3Kg

DXQK-75150T



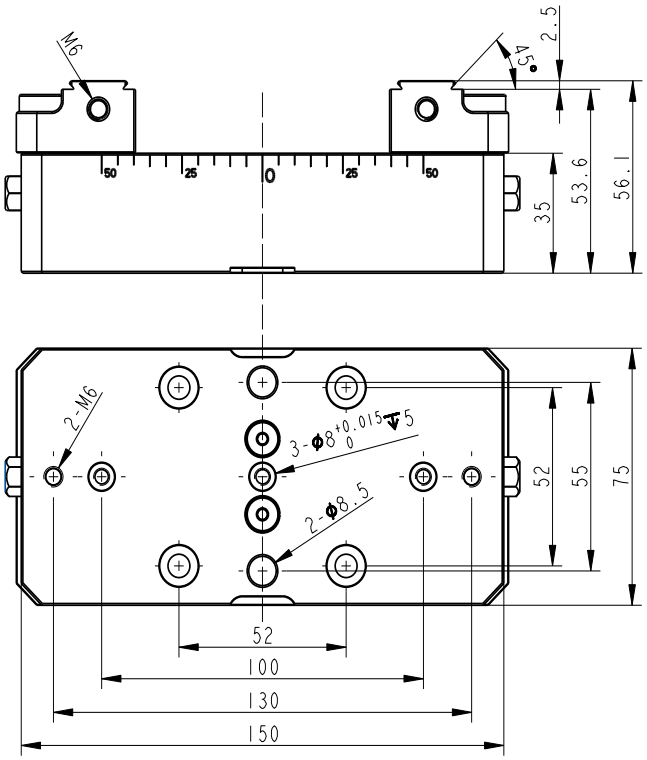

描述 Describe

尺寸: 75×150×56mm
正向夹持范围: 0-90mm
反向夹持范围: 41-126mm
钳体宽度: 75mm
最大扭矩: 60Nm@14KN
重量: 3Kg

Size: 75×150×56mm
Forward clamping range: 0-90mm
Reverse clamping range: 41-126mm
Clamp body width: 75mm
Maximum torque: 60Nm@14KN
Weight: 3Kg

75系列定心虎钳 Self centering vise

DXQK-75100



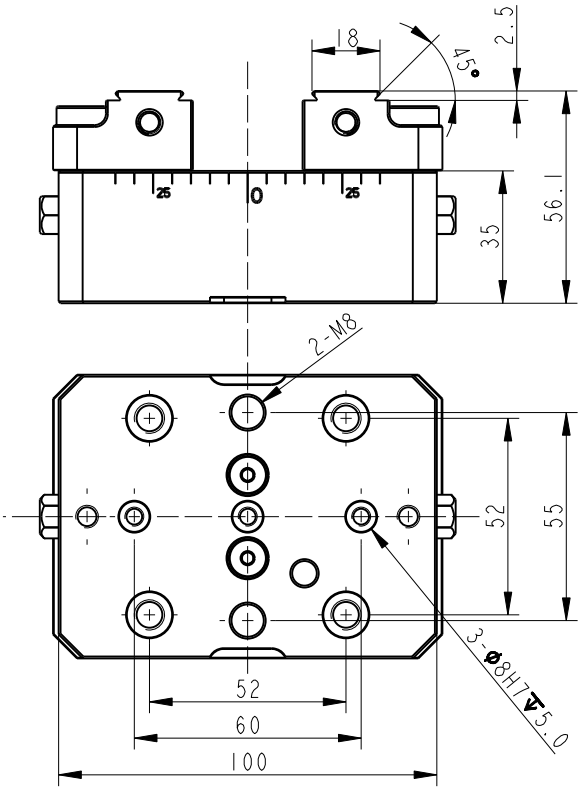

描述 Describe

尺寸: 75×100×56mm
正向夹持范围: 0-41mm
反向夹持范围: 41-76mm
钳体宽度: 75mm
最大扭矩: 60Nm@14KN
重量: 2.3Kg

Size: 75×100×56mm
Forward clamping range: 0-41mm
Reverse clamping range: 41-76mm
Clamp body width: 75mm
Maximum torque: 60Nm@14KN
Weight: 2.3Kg

DXQK-75150



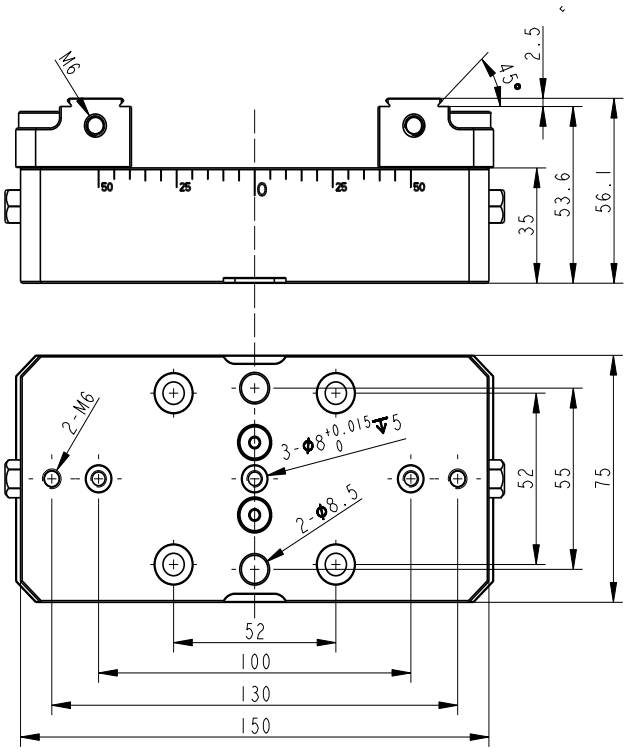

描述 Describe

尺寸: 75×150×56mm
正向夹持范围: 0-90mm
反向夹持范围: 41-126mm
钳体宽度: 75mm
最大扭矩: 60Nm@14KN
重量: 3Kg

Size: 75×150×56mm
Forward clamping range: 0-90mm
Reverse clamping range: 41-126mm
Clamp body width: 75mm
Maximum torque: 60Nm@14KN
Weight: 3Kg

75系列定心虎钳FF-75100 Self centering vise



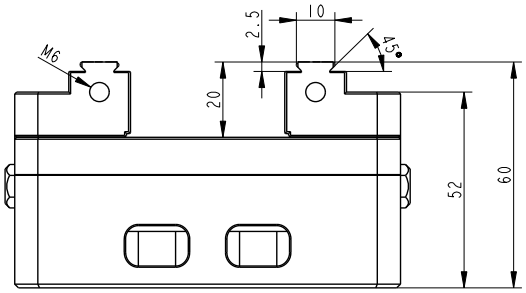

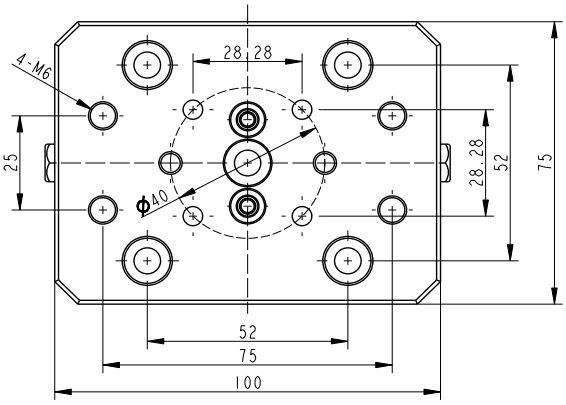

描述 Describe

尺寸: 75×100×62mm
正向夹持范围: 0-46mm
反向夹持范围: 45-76mm
钳体宽度: 75mm
最大扭矩: 60Nm@14KN
重量: 2.6Kg

Size: 75×100×62mm
Forward clamping range: 0-46mm
Reverse clamping range: 45-76mm
Clamp body width: 75mm
Maximum torque: 60Nm@14KN
Weight: 2.6Kg

100系列定心虎钳 Self centering vise

FF-100150



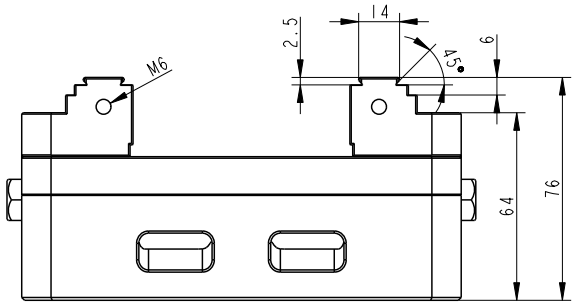

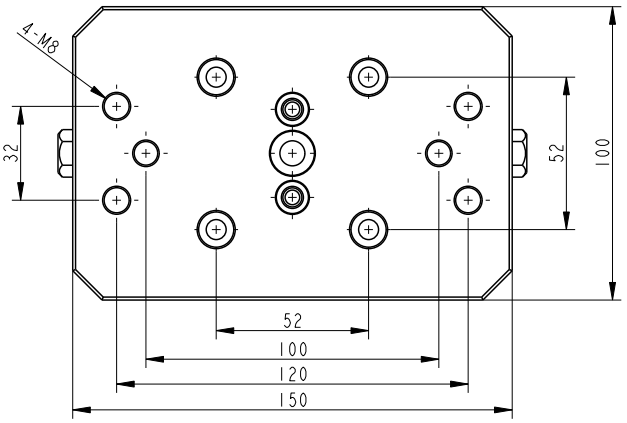

描述 Describe

尺寸: 100×150×76mm
正向夹持范围: 0-80mm
反向夹持范围: 57-118mm
钳体宽度: 75mm
最大扭矩: 75Nm@20KN
重量: 5.5Kg

Size: 100×150×76mm
Forward clamping range: 0-80mm
Reverse clamping range: 57-118mm
Clamp body width: 75mm
Maximum torque: 75Nm@20KN
Weight: 5.5Kg

130系列定心虎钳 Self centering vise

FF-130170



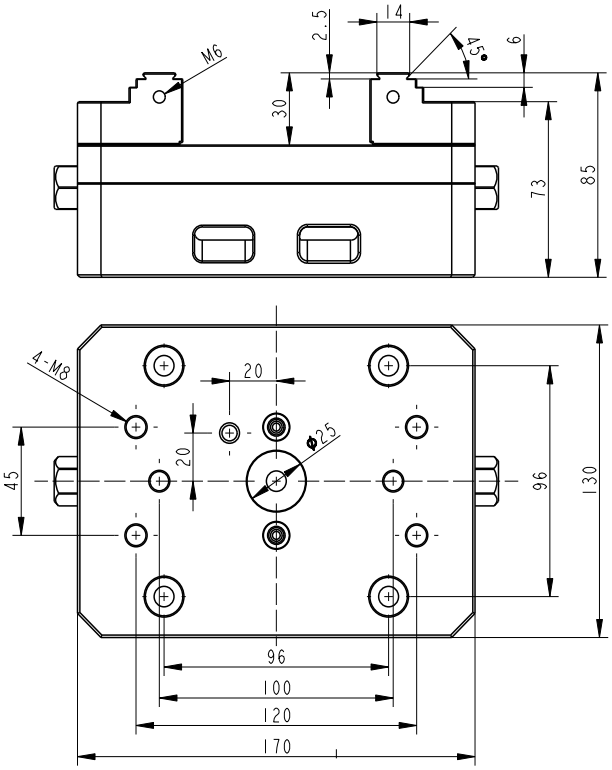

描述 Describe

尺寸: 130×170×85mm
正向夹持范围: 0-86mm
反向夹持范围: 71-152mm
钳体宽度: 130mm
最大扭矩: 80Nm@25KN
重量: 9.3Kg

Size:130×170×85mm
Forward clamping range: 0-86mm
Reverse clamping range: 71-152mm
Clamp body width: 130mm
Maximum torque: 25Nm@80KN
Weight: 9.3Kg

125系列定心虎钳 Self centering vise

SF-125155-1



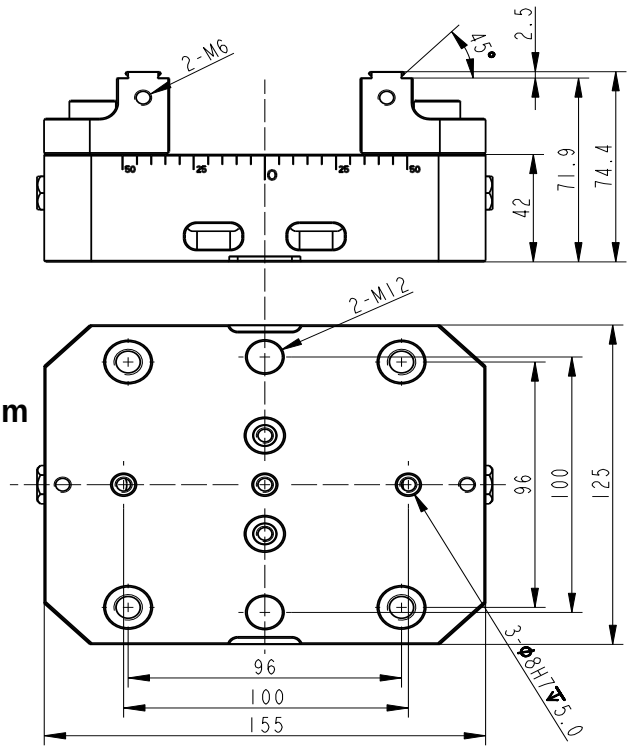

描述 Describe

尺寸: 125×155×74.4mm
正向夹持范围: 0-76mm
反向夹持范围: 56-127mm
钳体宽度: 125mm
最大扭矩: 75Nm@20KN
重量: 7Kg

Size:125×155×74.4mm
Forward clamping range: 0-76mm
Reverse clamping range: 56-127mm
Clamp body width: 125mm
Maximum torque: 75Nm@20KN
Weight: 7Kg

125系列定心虎钳 Self centering vise

SF-125155-2



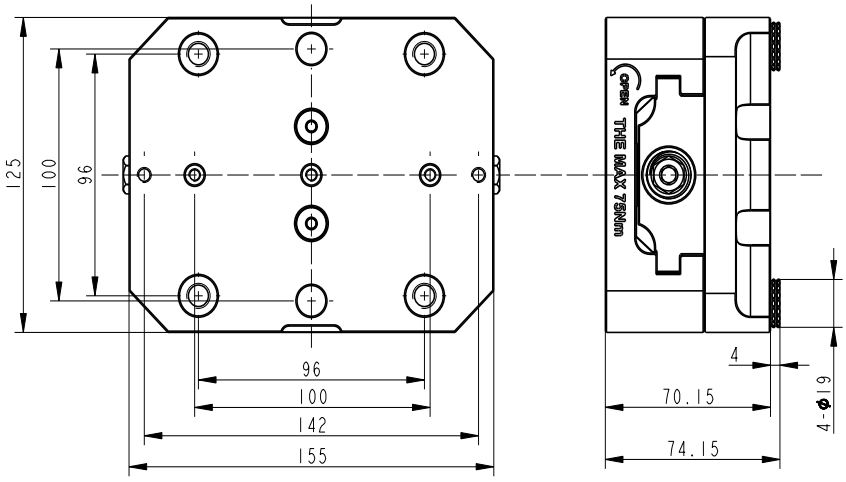

描述 Describe

尺寸: 125×155×74.4mm
正向夹持范围: 0-76mm
反向夹持范围: 56-127mm
钳体宽度: 125mm
最大扭矩: 75Nm@20KN
重量: 7Kg

Size:125×155×74.4mm
Forward clamping range: 0-76mm
Reverse clamping range: 56-127mm
Clamp body width: 125mm
Maximum torque: 75Nm@20KN
Weight: 7Kg

SF-125255



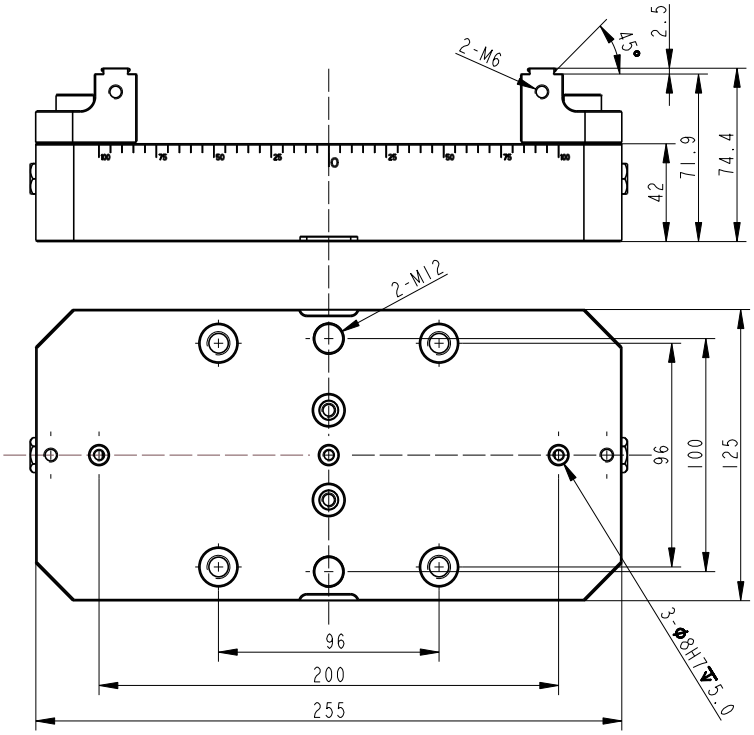

描述 Describe

尺寸: 125×255×74.4mm
正向夹持范围: 0-177mm
反向夹持范围: 56-228mm
钳体宽度: 125mm
最大扭矩: 75Nm@20KN
重量: 9.8Kg

Size:125×255×74.4mm
Forward clamping range: 0-177mm
Reverse clamping range: 56-228mm
Clamp body width: 125mm
Maximum torque: 75Nm@20KN
Weight: 9.8Kg

125双工位虎钳
SFDB-125255

Double station vise



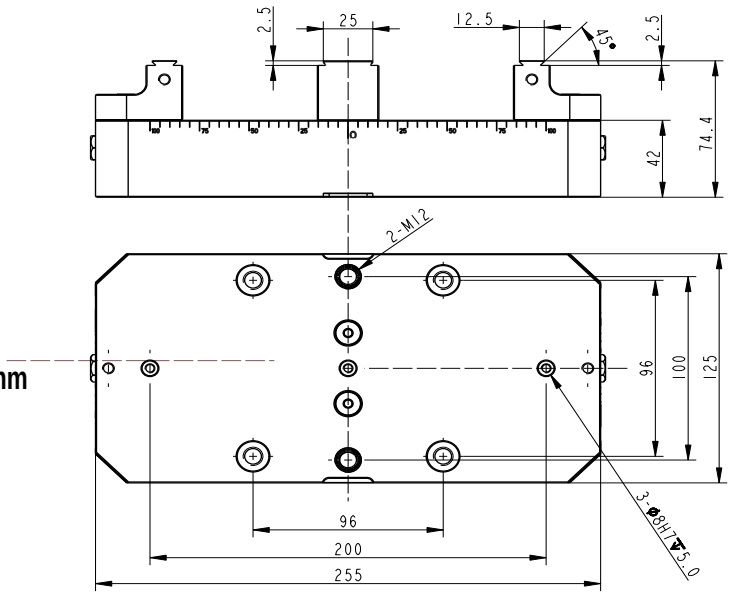

描述 Describe

尺寸: 125×255×74.4mm
正向夹持范围: 0-74mm
反向夹持范围: 32-110mm
钳体宽度: 125mm
最大扭矩: 75Nm@20KN
重量: 9.8Kg

Size:125×255×74.4mm
Forward clamping range: 0-74mm
Reverse clamping range: 32-110mm
Clamp body width: 125mm
Maximum torque: 75Nm@20KN
Weight: 9.8Kg

Pneumatic self-centering vice

气动虎钳 SLQD-0166



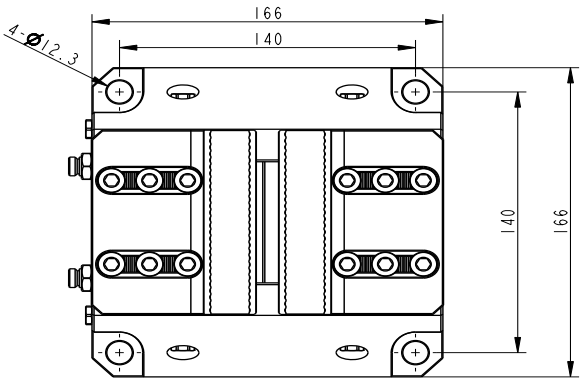

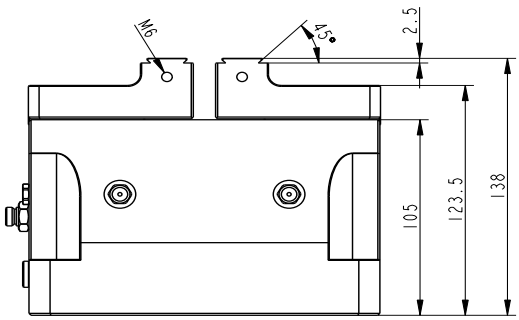

描述 Describe

尺寸: 166×166×138mm 正向夹持范围: 0-50mm 反向夹持范围: 125-160mm
钳体宽度: 125mm
最大扭矩:
75Nm/7bar@20KN
重量: 19Kg

Size:166×166×138mm
Forward clamping range: 0-50mm
Reverse clamping range: 125-160mm
Clamp body width: 125mm
Maximum torque: 75Nm/7bar@20KN
Weight: 19Kg

ER型夹头 ER chuck



ER32-52

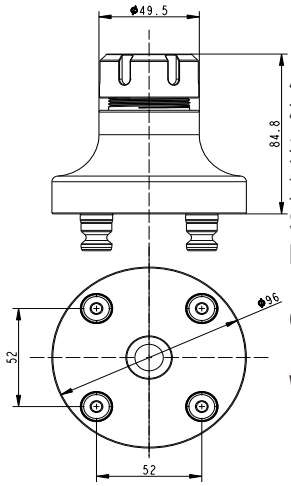

描述 D
尺寸: D96×84.8mm
材质: 硬化钢
夹持范围: 2-20mm
重量: 2.1Kg
Size: D96×84.8mm
Material:
Hardened steel
Clamping range:
2-20mm
Weight: 2.1Kg

ER40-52

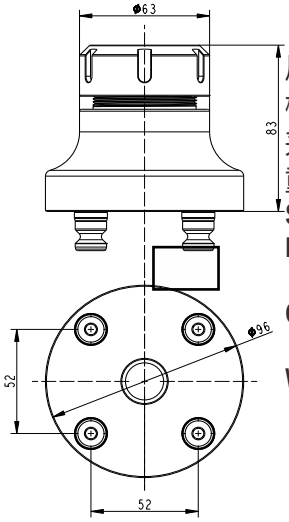

描述 D
尺寸: D96×83mm
材质: 硬化钢
夹持范围: 3-26mm
重量: 3.5Kg
Size: D96×83mm
Material:
Hardened steel
Clamping range:
3-26mm
Weight: 3.5Kg

ER型夹头 ER chuck



ER32-96

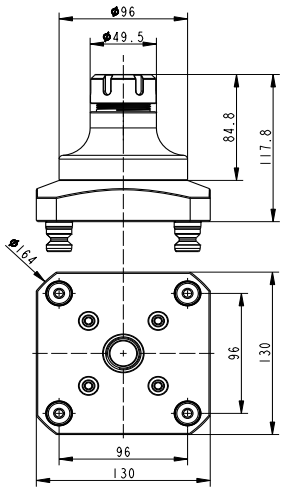

描述 D
尺寸:
130×130×117.8mm
材质: 硬化钢
夹持范围: 2-20mm
重量: 5.8Kg
Size:
130×130×117.8mm
Material:
Hardened steel
Clamping range:
2-20mm
Weight: 5.8Kg

ER40-96

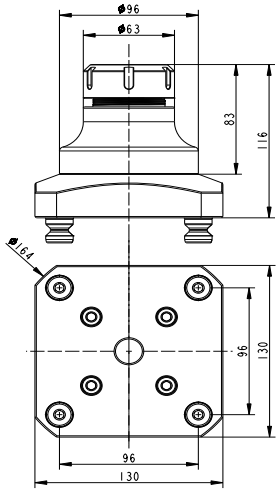

描述 D
尺寸:
130×130×116mm
材质: 硬化钢
夹持范围: 3-26mm
重量: 6Kg
Size:
130×130×116mm
Material:
Hardened steel
Clamping range:
3-26mm
Weight: 6Kg

卡盘 Chuck



型号 Cat. No	卡盘外径 Outside diameter of chuck	卡盘内孔 Chuck inner hole	正夹持范围 Forward clamping	反夹持范围 Reverse clamping	内撑范围 Inner brace clamping	拉丁间距 Knob distance
SFCK96-125	125	30	2.5-40	38-110	38-125	96*96
SFCK96-160	160	40	3-55	55-145	50-160	96*96
SFCK96-200	125	65	4-85	65-200	65-200	96*96
SFCK52-80	80	16	2-22	22-63	25-70	52*52
SFCK52-100	100	22	2-30	30-80	30-90	52*52
SFCK52-130	130	30	2.5-40	38-110	38-125	52*52

圆盘自定心虎钳 Disc Self centering vise

SFYP-D



Bottom diameter: 250mm
Width of the jaw: 160mm
Weight: 23KG

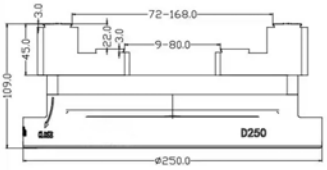

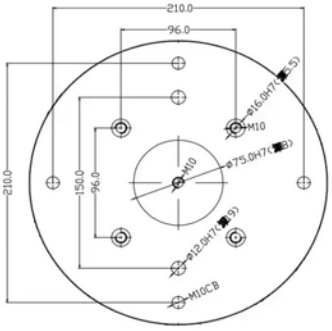

D250

Bottom diameter: 170mm
Width of the jaw: 104mm
Weight: 9KG

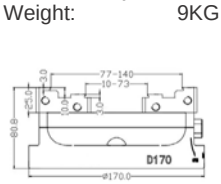

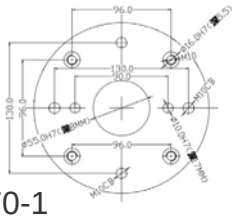

D170-1

Bottom diameter: 210mm
Width of the jaw: 130mm
Weight: 14KG

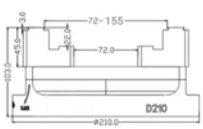

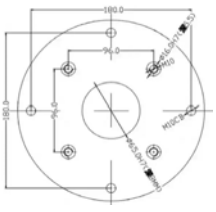

D210

Bottom diameter: 125mm
Width of the jaw: 76mm
Weight: 3KG

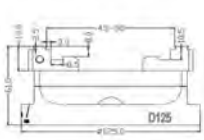

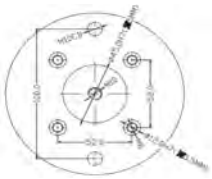

D125

Bottom diameter: 170mm
Width of the jaw: 104mm
Weight: 8.5KG

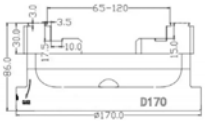

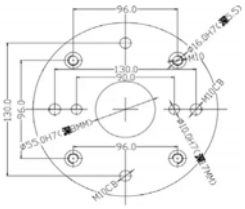

D170-2

Bottom diameter: 150mm
Width of the jaw: 90mm
Weight: 5.6KG

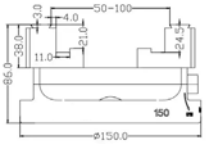

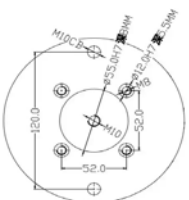

D150

Bottom diameter: 170mm
Width of the jaw: 104mm
Weight: 9KG

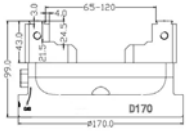

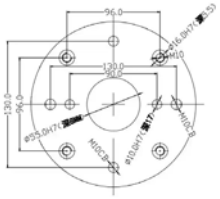

D170-3

拉钉 Petention knob

LD1216



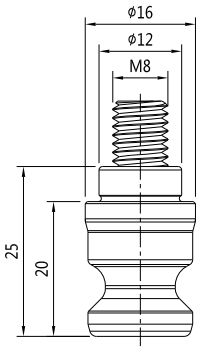

描述 Describe
尺寸: Φ16×34mm
材质: 硬化工具钢
重量: 0.03Kg

Size:
Φ16×34mm
Material:
Hardened tool steel
Weight:0.03Kg

LD1620



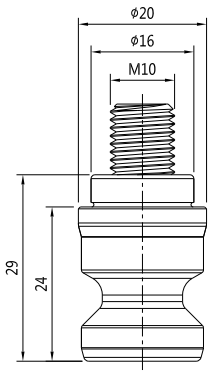

描述 Describe
尺寸: Φ20×40mm
材质: 硬化工具钢
重量: 0.05Kg

Size:
Φ20×40mm
Material:
Hardened tool steel
Weight:0.05Kg

安装方式

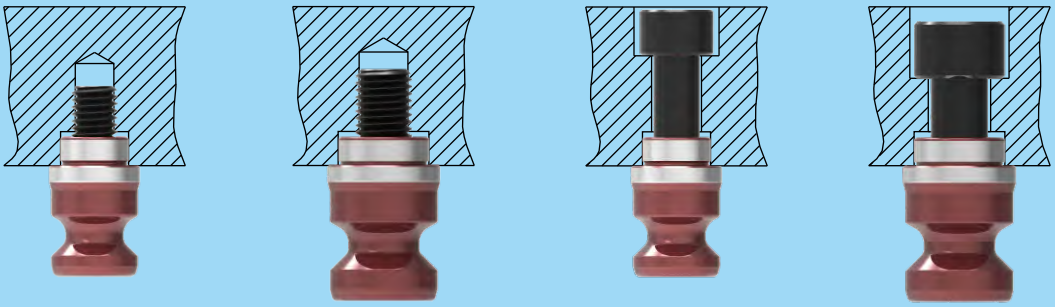

52 96 52 96

L板 L board

SL170



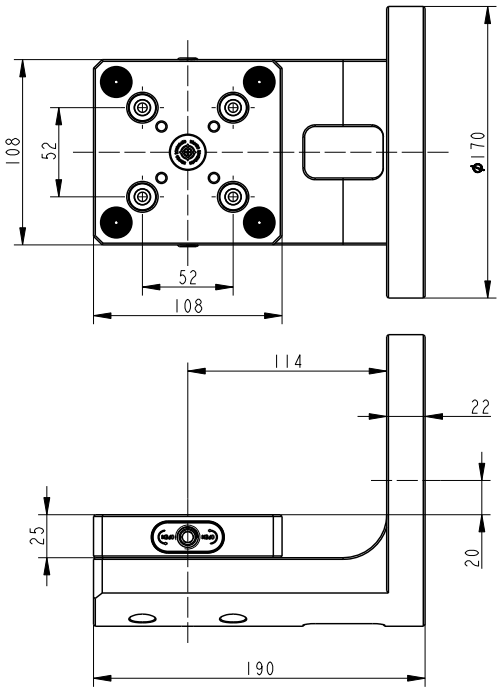

描述 Describe

尺寸: Φ170×190mm

材质: 硬化钢+表面防锈

重量: 7.7Kg

Size:
Φ170×190mm
Material: hardened steel + surface rust resistant
Weight: 7.7Kg

SL200



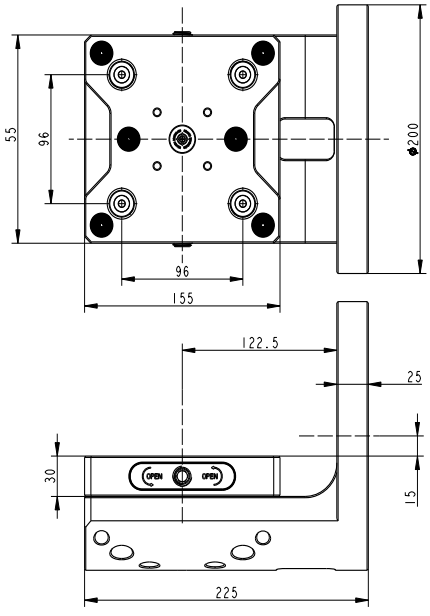

描述 Describe

尺寸: Φ200×225mm

材质: 硬化钢+表面防锈

重量: 14.6Kg

Size:
Φ200×225mm
Material: hardened steel + surface rust resistant
Weight: 14.6Kg

附件 Appendix

限位器

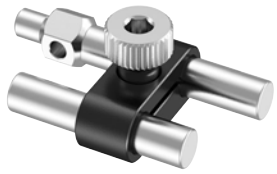

描述 Describe

简单/可调节的工件限位组件
提供快速准确的工件重新定位
适用于所有自定心和双工位虎钳

Simple/adjustable workpiece stop assembly
Provides fast and accurate workpiece repositioning
Suitable for all self-centering and duplex vises

中心定位销



描述 Describe

我们的定位套件安装简单
套件包括螺钉,T型块,定位套

为确保安装正确
订货时请提供机床品牌型号

Our positioning kits are easy to install
Kit includes screws, T-block, positioning sleeve
To ensure correct installation
Please provide machine tool brand model when ordering

* 客户可自制

螺纹定位销



描述 Describe

虎钳 快换板 定位销：
LP6 - 6mm
LP8 - 8mm
LP10 - 10mm

Vise Quick change plate Positioning pin:
LP6-6mm
LP8-8mm
LP10-10mm


NBD
铣削刀具
Milling tools

BAP 直角方肩面铣刀盘
BAP right angle shoulder face mill

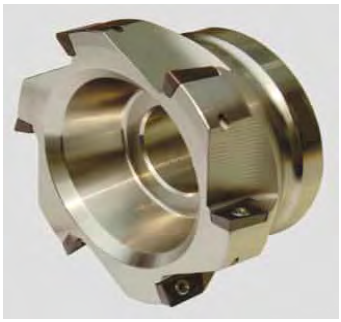

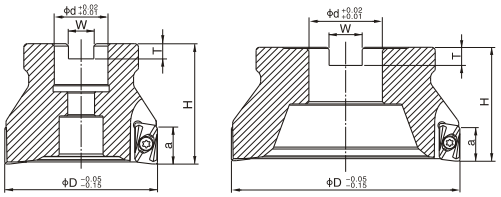

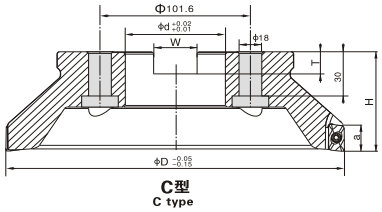

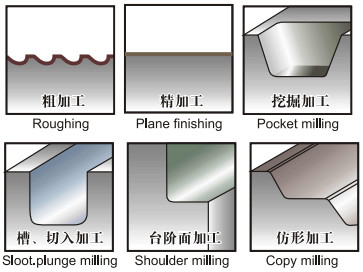

型号 Cat. No	刃数 No.of flutes	样式 Manner	尺寸 Size(mm) D	d	H	W	T	a	圆垫片 Circular cushin	适用刀片 Applicable inserts	螺钉 Screw	扳手 Wrench
BAP400R–50–22–4T	4	A	50	22	50	10.4	6.3	14	—	APMT 1604 PDER	M4×10	T15F T15
BAP400R–63–22–4T	4	A	63	22	50	10.4	6.3	14	—			
BAP400R–63–22–5T	5	A	63	22	50	10.4	6.3	14	—			
BAP400R–80–27–6T	6	A	80	27	50	12.4	7	14	—			
BAP400R–100–32–6T	6	B	100	32	50	14.4	8	14	FMB–32–SHIM			
BAP400R–125–40–6T	6	B	125	40	63	14.4	8	14	FMB–40–SHIM			
BAP400R–160–40–9T	9	B	160	40	63	14.4	8	14	FMB–40–SHIM			
BAP400R–200–60–9T	9	C	200	60	63	25.7	14	14	—			
BAP400R–200–60–12T	12	C	200	60	63	25.7	14	14	—			
BAP400R–50–25.4–4T	4	A	50	25.4	50	10	6	14	—			
BAP400R–63–25.4–4T	4	A	63	25.4	50	10	6	14	—			
BAP400R–63–25.4–5T	5	A	63	25.4	50	10	6	14	—			

EMR 圆角面铣刀盘
EMR round dowel face mill



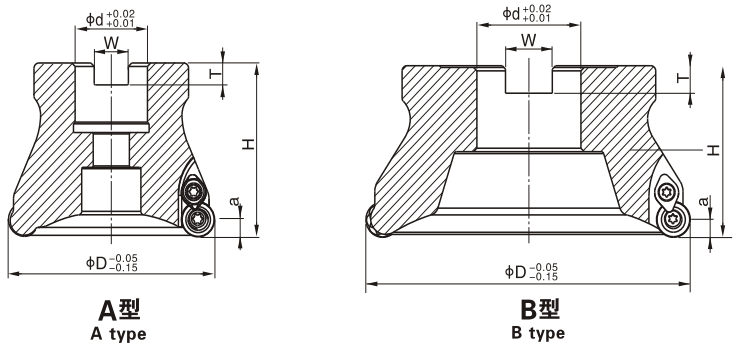

型号 Cat. No	刃数 No.of flutes	样式 Manner	尺寸 Size(mm) D	d	H	W	T	a	圆垫片 Circular cushin	适用刀片 Applicable inserts	压板 Clamp	螺钉 Screw	扳手 Wrench
EMR–5R–50–22–4T	4	A	50	22	50	10.4	6.3	5	—	RPMW 1003 MO RPMW 10T3 MOE	A–5R	M4×10 /M3.5×10	T15F T15
EMR–5R–63–22–4T	4	A	63	22	50	10.4	6.3	5	—				
EMR–5R–63–22–5T	5	A	63	22	50	10.4	6.3	5	—				
EMR–5R–80–27–6T	6	A	80	27	50	12.4	7	5	—				
EMR–5R–100–32–6T	6	B	100	32	50	14.4	8	5	FMB–32–SHIM				
EMR–5R–50–25.4–4T	4	A	50	25.4	50	10	6	5	—				
EMR–5R–63–25.4–4T	4	A	63	25.4	50	10	6	5	—				
EMR–5R–63–25.4–5T	5	A	63	25.4	50	10	6	5	—				

EMRW 圆角面铣刀盘
EMRW round dowel face mill



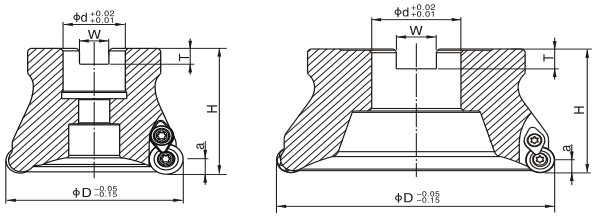

A型 A type　　B型 B type

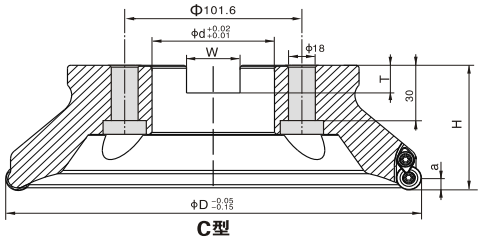

C型 C type

型号 Cat. No	刃数 No.of flutes	样式 Manner	尺寸 Size(mm) D	d	H	W	T	a	垫片 Circular cushin	适用刀片 Applicable inserts	压板 Clamp	螺钉 Screw	扳手 Wrench
EMRW–6R–50–22–4T	4	A	50	22	50	10.4	6.3	6	—	RPMW \ T 1204 MO	A–6R	M4×10	T15F T15
EMRW–6R–63–22–4T	4	A	63	22	50	10.4	6.3	6	—				
EMRW–6R–63–22–5T	5	A	63	22	50	10.4	6.3	6	—				
EMRW–6R–80–27–6T	6	A	80	27	50	12.4	7	6	—				
EMRW–6R–100–32–6T	6	B	100	32	50	14.4	8	6	FMB–32–SHIM				
EMRW–6R–125–40–6T	6	B	125	40	63	16.4	9	6	FMB–40–SHIM				
EMRW–6R–160–40–9T	9	B	160	40	63	16.4	9	6	FMB–40–SHIM				
EMRW–6R–200–60–9T	9	C	200	60	63	25.7	14	6	—				
EMRW–6R–50–25.4–4T	4	A	50	25.4	50	10	6	6	—				
EMRW–6R–63–25.4–4T	4	A	63	25.4	50	10	6	6	—				
EMRW–6R–63–25.4–5T	5	A	63	25.4	50	10	6	6	—				
EMRW–6R–80–25.4–6T	6	A	80	25.4	50	10	6	6	—				

KM–45° 面铣刀盘
KM–45° face mill

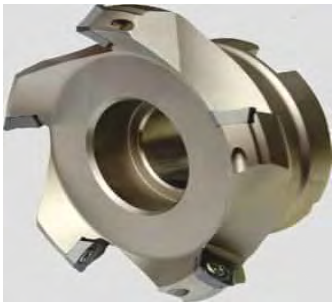

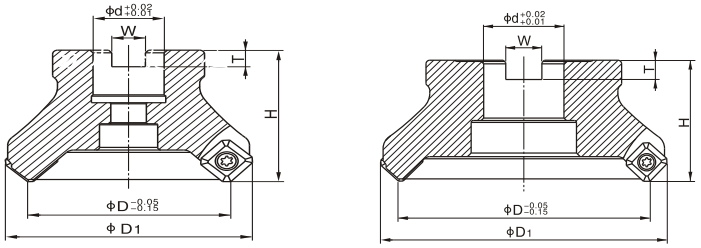

A型 A type　　B型 B type

型号 Cat. No	刃数 No.of flutes	样式 Manner	尺寸 Size(mm) D	D1	d	H	W	T	垫片 Circular cushin	适用刀片 Applicable inserts	螺钉 Screw	扳手 Wrench
KM12–50–22–4T	4	A	50	64	22	50	10.4	6.3	—	SEKT 1204□□ SKET 1204□□ SEKW 1204□□	M5×11	T20F T20
KM12–63–22–4T	4	A	63	77	22	50	10.4	6.3	—			
KM12–80–27–5T	5	A	80	94	27	50	12.4	7	—			
KM12–100–32–5T	5	B	100	114	32	50	14.4	8	FMB–32–SHIM			
KM12–125–40–6T	6	B	125	139	40	63	16.4	9	FMB–40–SHIM			
KM12–160–40–9T	9	B	160	174	40	63	16.4	9	FMB–40–SHIM			
KM12–200–60–9T	9	B	200	174	60	63	25.7	14	—			
KM12–50–25.4–4T	4	A	50	64	25.4	50	10	6	—			
KM12–63–25.4–4T	4	A	63	77	25.4	50	10	6	—			
KM12–80–25.4–5T	5	A	80	94	25.4	50	10	6	—			
KM12–100–31.75–5T	5	B	100	114	31.75	50	13	8	FMB–31.75–SHIM			
KM12–125–38.1–6T	6	B	125	139	38.1	63	16.2	10	FMB–38.1–SHIM			
KM12–160–38.1–6T	6	B	160	174	38.1	63	16.2	10	FMB–38.1–SHIM			

MFWN90 直角面铣刀盘
MFWN90 shoulder face mill



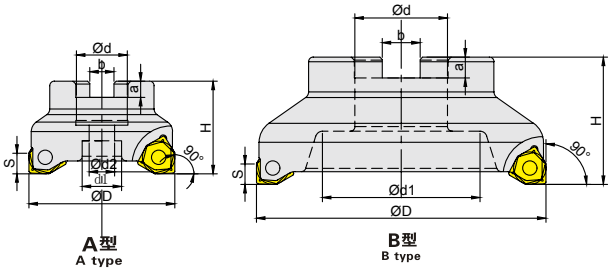



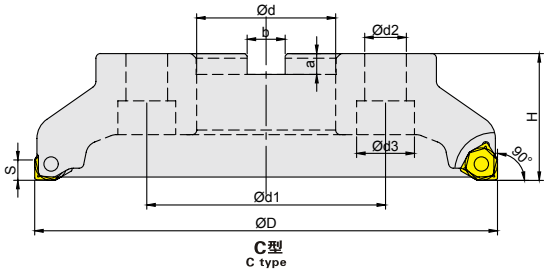

型号 Cat. No	适用刀片 Applicable inserts	刃数 No.of flutes	尺寸Size(mm) ϕD	ϕd	ϕd1	ϕd2	ϕd3	H	S	b	a	样式 Manner	螺钉 Screw	扳手 Wrench
MFWN90050R-08-4T-M	WN0806京瓷	4	50	22	16.6	11	-	40	8	10.4	7	A	5X12	T-15
MFWN90063R-08-5T-M		5	63	22	17	11	-	40	8	10.4	7	A		
MFWN90080R-08-6T-M		6	80	27	34	13	-	50	8	12.4	7	A		
MFWN900100R-08-7T-M		7	100	32	42	17	-	50	8	14.4	9	A		
MFWN900125R-08-8T-M		8	125	40	-	-	-	55	8	16.4	9	B		
MFWN900160R-08-10T-M		10	160	40	-	-	-	55	8	16.4	9	B		
MFWN900200R-08-12T-M		12	200	60	101.6	18	26	55	8	25.4	9	C		
MFWN900250R-08-14T-M		14	250	60	101.6	18	26	55	8	25.4	9	C		

MFPN66° 面铣刀盘
MFPN66° face mill



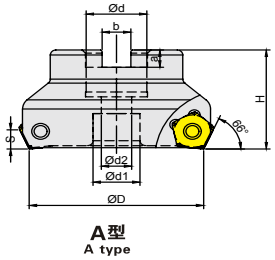

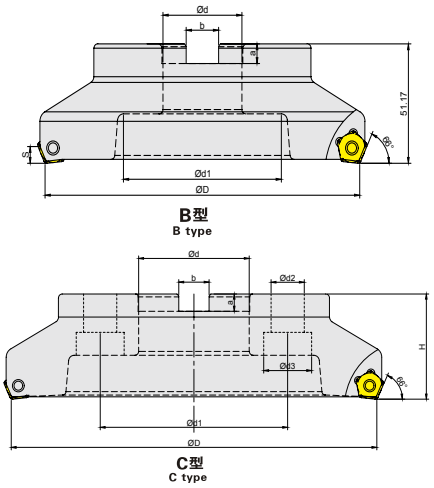

型号 Cat. No	适用刀片 Applicable inserts	刃数 No.of flutes	尺寸Size(mm) ϕD	ϕd	ϕd1	ϕd2	ϕd3	H	S	b	a	样式 Manner	螺钉 Screw	扳手 Wrench
MFPN 66 050R-4T-M	PNMU 0905 京瓷	4	50	22	17	11	-	40	7	10.4	7	A	4X10	T-15
MFPN 66 063R-5T-M		5	63	22	17	11	-	40	7	10.4	7	A		
MFPN 66 080R-6T-M		6	80	27	34	13	-	50	7	12.4	7	A		
MFPN 66 100R-7T-M		7	100	32	42	17	-	50	7	14.4	9	A		
MFPN 66 125R-8T-M		8	125	40	50	-	-	55	7	16.4	9	B		
MFPN 66 160R-10T-M		10	160	40	80	-	-	55	7	16.4	9	B		
MFPN 66 200R-12T-M		12	200	60	101.6	18	26	55	7	25.4	9	C		
MFPN 66 250R-14T-M		14	250	60	101.6	18	26	55	7	25.4	9	C		

TXN 高进给刀杆刀盘系列
TXN high feed rod and disc series



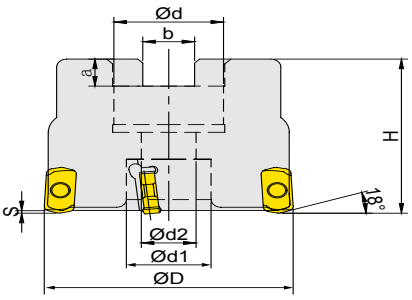

型号 Cat. No	适用刀片 Applicable inserts	刃数 No.of flutes	尺寸Size(mm) ϕD	ϕd	ϕd1	ϕd2	H	S	b	a	螺钉 Screw	扳手 Wrench
TXN03R032M160E06	LNMU03	6	32	16	14	9	40	0.5	8.4	6	2.5X7	T-8
TXN03R032M160E06-A		6	32	16	14	9	40	0.5	8.4	6		
TXN03R035M160E06		6	35	16	14	9	40	0.5	8.4	6		
TXN03R035M160E06-A		6	35	16	14	9	40	0.5	8.4	6		
TXN03R040M160E06		6	40	16	14	9	40	0.5	8.4	6		
TXN03R040M160E06-A		6	40	16	14	9	40	0.5	8.4	6		
TXN03R045M160E06		6	45	16	14	9	40	0.5	8.4	6		
TXN03R045M160E06-A		6	45	16	14	9	40	0.5	10.4	7		
TXN03R050M220E08		8	50	22	17	11	40	0.5	10.4	7		
TXN03R050M220E08-A		8	50	22	17	11	40	0.5	10.4	7		
TXN03R055M220E08		8	55	22	17	11	40	0.5	10.4	7		
TXN03R055M220E08-A		8	55	22	17	11	40	0.5	10.4	7		
TXN03R063M220E08		8	63	22	17	11	40	0.5	10.4	7		
TXN03R063M220E08-A		8	63	22	17	11	40	0.5	10.4	7		
TXN03R070M220E10		10	70	22	17	11	40	0.5	10.4	7		
TXN03R070M220E10-A		10	70	22	17	11	40	0.5	10.4	7		
TXN03R080M270E10		10	80	27	34	13	50	0.5	12.4	9		
TXN03R080M270E10-A		10	80	27	34	13	50	0.5	12.4	9		
TXN06R050M220E05	LNMU06	5	50	22	17	11	40	0.5	10.4	7	5X12	T-20
TXN06R063M220E06		6	63	22	17	11	40	0.5	10.4	7		
TXN06R080M270E08		8	80	27	34	13	50	0.5	12.4	9		

SDMT1205/1505 高进给刀盘系列
SDMT1205/1505 high intake cutter head series



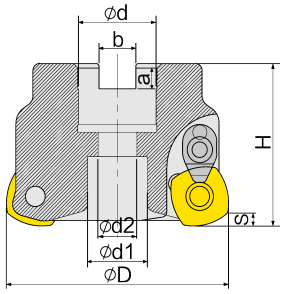

A型
A type

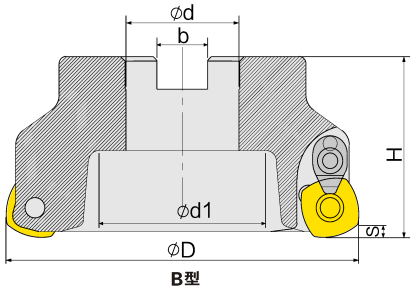

B型
B type

型号 Cat. No	适用刀片 Applicable inserts	刃数 No.of flutes	尺寸Size(mm) ϕD	ϕd	ϕd1	ϕd2	H	S	b	a	样式 Manner	螺钉 Screw	压板 Press plate	扳手 Wrench
ASRF 12 050 4T 22	SDMT120512	4	50	22	17	11	45	2	10.4	7	A	4X10	CYB1610-4	T-15
ASRF 12 063 4T 22		4	63	22	17	11	45	2	10.4	7	A			
ASRF 12 080 5T 27		5	80	27	30	13	50	2	12.4	7	A			
ASRF 12 100 6T 32		6	100	32	47	-	50	2	14.4	9	B			
ASRF 12 125 7T 40		7	125	40	55.5	-	55	2	16.4	9	B			
ASRF 12 160 8T 40		8	160	40	90.5	-	55	2	16.4	9	B			
ASRF 15 050 4T 22	SDMT150512	4	50	22	17	11	45	3	10.4	7	A	5X12	CYB1610-5	T-20
ASRF 15 063 4T 22		4	63	22	17	11	45	3	10.4	7	A			
ASRF 15 080 5T 27		5	80	27	30	13	50	3	12.4	7	A			
ASRF 15 100 6T 32		6	100	32	47	-	50	3	14.4	9	B			
ASRF 15 125 7T 40		7	125	40	55.5	-	55	3	16.4	9	B			
ASRF 15 160 8T 40		8	160	40	90.5	-	55	3	16.4	9	B			

EXN02 03 立铣刀杆
EXN02 03 End mill



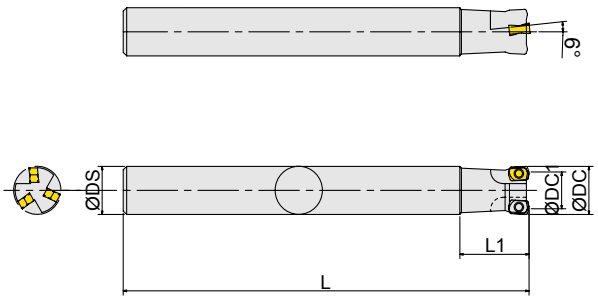

型号 Cat. No	适用刀片 Applicable inserts	刃数 No.of flutes	尺寸Size(mm) ϕdc	ϕdc1	ϕds	L	L1	螺钉 Screw	扳手 Wrench
EXN02R08M10.0-100-01	LNMU02	1	8	3.61	10	100	17	1.8x3.7	T-6
EXN02R09M10.0-100-01		1	9	4.74	10	100	19		
EXN02R010M10.0-100-02		2	10	5.85	10	100	22		
EXN02R011M10.0-100-02		2	11	6.76	10	100	11		
EXN02R012M12.0-80-03		3	12	7.68	12	80	26		
EXN02R012M12.0-120-03		3	12	7.68	12	120	26		
EXN02R013M12.0-80-03		3	13	8.68	12	80	13		
EXN02R013M12.0-120-03		3	13	8.68	12	120	13		
EXN02R014M14.0-120-03		3	14	9.51	14	120	30		
EXN02R014M14.0-150-03		3	14	9.51	14	150	30		
EXN02R015M14.0-120-03		3	15	10.43	14	120	15		
EXN02R015M14.0-160-03		3	15	10.43	14	160	15		
EXN02R016M16.0-120-04		4	16	11.35	16	120	35		
EXN02R016M16.0-160-04		4	16	11.35	16	160	35		
EXN02R017M16.0-120-04		4	17	12.27	16	120	17		
EXN02R017M16.0-160-04		4	17	12.27	16	160	17		
EXN03R016M16.0-100-02	LNMU03	2	16	10.18	16	100	30	2.5x7	T-8
EXN03R016M16.0-120-02		2	16	10.18	16	120	30		
EXN03R016M16.0-150-02		2	16	10.18	16	150	30		
EXN03R017M16.0-100-02		2	17	11.18	16	100	20		
EXN03R017M16.0-120-02		2	17	11.18	16	120	20		
EXN03R017M16.0-150-02		2	17	11.18	16	150	20		
EXN03R020M20.0-100-03		3	20	14.18	20	100	30		
EXN03R020M20.0-130-03		3	20	14.18	20	130	50		
EXN03R020M20.0-160-03		3	20	14.18	20	160	50		
EXN03R021M20.0-130-03		3	21	15.18	20	130	35		
EXN03R021M20.0-160-03		3	21	15.18	20	160	35		
EXN03R025M25.0-100-04		4	25	19.18	25	100	37		
EXN03R025M25.0-140-04		4	25	19.18	25	140	60		
EXN03R025M25.0-200-04		4	25	19.18	25	200	60		
EXN03R026M25.0-140-04		4	26	20.18	25	140	30		
EXN03R026M25.0-200-04		4	26	20.18	25	200	30		
EXN03R030M25.0-150-04		4	30	24.18	25	150	30		
EXN03R032M32.0-150-05		5	32	26.18	32	150	70		
EXN03R032M32.0-200-05		5	32	26.18	32	200	70		
EXN03R033M32.0-150-05		5	33	27.18	32	150	30		
EXN03R033M32.0-200-05		5	33	27.18	32	200	30		
EXN03R035M32.0-160-06		6	35	29.18	32	160	40		
EXN03R035M32.0-200-06		6	35	29.18	32	200	40		

BAP 直角立铣刀杆
BAP right angle shoulder end mill

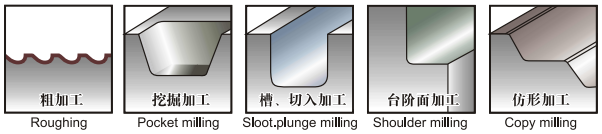

Roughing Pocket milling Sloot,plunge milling Shoulder milling Copy milling



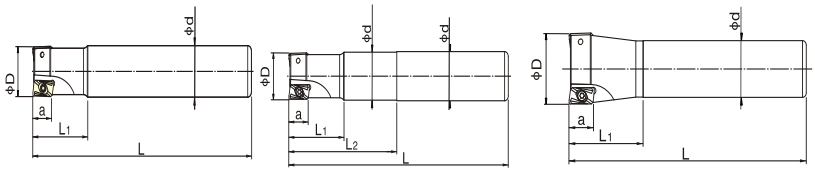

A型 A type　B型 B type　C型 Ctype

型号 Cat. No	刃数 No.of flutes	样式 Manner	尺寸 Size(mm) D	d	L	L1	L2	a	适用刀片 Applicable inserts	螺钉 Screw	扳手 Wrench
BAP300R–12×100	1	A	12	12	100	30	—	9	APMT 1135 PDER	M2.5×5	T8F T8
BAP300R–12×130	1	A	12	12	130	36	—	9			
BAP300R–12×150	1	A	12	12	150	36	—	9			
BAP300R–13×120–C12	1	A	13	12	120	30	—	9			
BAP300R–16×160	2	A	16	16	160	40	—	9	APMT 1135 PDER	M2.5×6.5	
BAP300R–16×200	2	B	16	16	200	40	100	9			
BAP300R–17×160–C16	2	A	17	16	160	40	—	9			
BAP300R–17×200–C16	2	A	17	16	200	40	—	9			
BAP300R–20×160	2/3	A	20	20	160	50	—	9			
BAP300R–20×180	2/3	B	20	20	180	50	90	9			
BAP300R–20×200	2/3	B	20	20	200	50	100	9			
BAP300R–21×160–C20	2/3	A	21	20	160	40	—	9			
BAP300R–21×200–C20	2/3	A	21	20	200	50	—	9			
BAP300R–25×160	3	A	25	25	160	50	—	9			
BAP300R–25×200	3	A	25	25	200	75	—	9			
BAP300R–30×160–C25	3	C	30	25	160	50	—	9			
BAP400R–25×160	2	A	25	25	160	50	—	14	APMT 1604 PDER	M4×9	T15F T15
BAP400R–25×160–C24	2	A	25	24	160	50	—	14			
BAP400R–25×200	2	A	25	25	200	75	—	14			
BAP400R–25×200–C24	2	A	25	24	200	50	—	14			
BAP400R–25×250	2	B	25	25	250	50	115	14			
BAP400R–25×250–C24	2	A	25	24	250	50	—	14			
BAP400R–26×160–C25	2	A	26	25	160	50	—	14			
BAP400R–26×200–C25	2	A	26	25	200	50	—	14			
BAP400R–32×160–C25	2/3	C	32	25	160	50	—	14			
BAP400R–32×200–C25	2/3	C	32	25	200	50	—	14			
BAP400R–32×200	2/3	A	32	32	200	80	—	14			
BAP400R–35×160–C32	3	C	35	32	160	50	—	14			
BAP400R–35×200–C32	3	C	35	32	200	50	—	14			
BAP400R–35×250–C32	3	C	35	32	250	60	—	14			
BAP400R–35×300–C32	3	C	35	32	300	60	—	14			
BAP400R–35×350–C32	3	C	35	32	350	60	—	14			
BAP400R–40×160–C32	3	C	40	32	160	50	—	14			
BAP400R–40×200–C32	3	C	40	32	200	50	—	14			
BAP400R–40×250–C32	3	C	40	32	250	60	—	14			

EMR 圆鼻立铣刀杆
EMR round dowel end mill

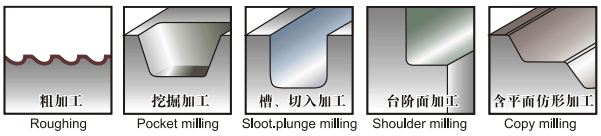



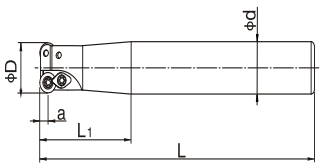

A型
A type

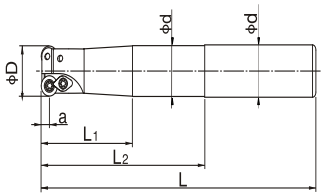

B型
B type

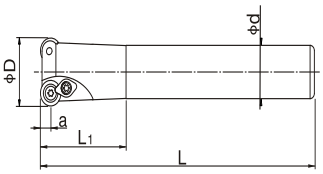

C型
C type

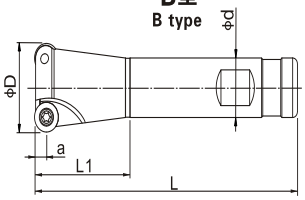

D型
D type

型号 Cat. No	刃数 No.of flutes	样式 Manner	尺寸 Size(mm) D	d	L	L1	L2	a	适用刀片 Applicable inserts	压板 Clamp	螺钉 Screw	扳手 Wrench
EMR–4R×12×120	1	A	12	12	120	40	—	4	RPMW 0802 MO	—	M3×7	T10F T10
EMR–4R×13×120–C12	1	A	13	12	120	40	—	4				
EMR–4R×16×120	2	A	16	16	120	40	—	4	RPMW 0802 MO	A–4R		
EMR–4R×16×160	2	A	16	16	160	40	—	4				
EMR–4R×16×200	2	B	16	16	200	40	100	4				
EMR–4R×17×160–C16	2	A	17	16	160	40	—	4				
EMR–4R×17×200–C16	2	A	17	16	200	40	—	4				
EMR–4R×20×160	2	A	20	20	160	50	—	4				
EMR–4R×20×200	2	B	20	20	200	50	100	4				
EMR–4R×21×160–C20	2	A	21	20	160	50	—	4				
EMR–4R×21×200–C20	2	A	21	20	200	50	—	4				
EMR–5R×20×160	2	A	20	20	160	50	—	5	RPMW 1003 MO RPMT 10T3 MOE	A–5R	M4×9 M3.5×10	T15F T15
EMR–5R×20×200	2	B	20	20	200	50	100	5				
EMR–5R×21×160–C20	2	A	21	20	160	50	—	5				
EMR–5R×25×160	2	A	25	25	160	50	—	5				
EMR–5R×25×160–C20	2	C	25	20	160	50	—	5				
EMR–5R×25×160–C24	2	A	25	24	160	50	—	5				
EMR–5R×25×200	2	A	25	25	200	75	—	5				
EMR–5R×25×250	2	B	25	25	250	60	115	5				
EMR–5R×25×200–C20	2	C	25	20	200	50	—	5				
EMR–5R×25×200–C24	2	A	25	24	200	50	—	5				
EMR–5R×30×110–C20	2	D	30	20	110	40	—	5		—		
EMR–5R×30×110–C19.05	2	D	30	19.05	110	40	—	5				
EMR–5R×30×160–C25	2	C	30	25	160	50	—	5		A–5R		
EMR–5R×30×200–C25	2	C	30	25	200	60	—	5				
EMR–5R×30×250–C25	2	C	30	25	250	60	—	5				
EMR–5R×35×160–C32	2/3	C	35	32	160	50	—	5				
EMR–5R×35×200–C32	2/3	C	35	32	200	50	—	5				
EMR–5R×35×250–C32	2/3	C	35	32	250	60	—	5				
EMR–5R×35×300–C32	3	C	35	32	300	60	—	5				
EMR–5R×35×350–C32	3	C	35	32	350	60	—	5				
EMR–5R×40×160–C32	3/4	C	40	32	160	50	—	5				
EMR–5R×40×200–C32	4	C	40	32	200	50	—	5				

EMRW 圆鼻立铣刀杆
EMRW round dowel end mill

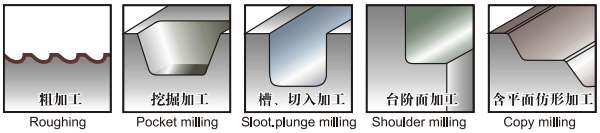

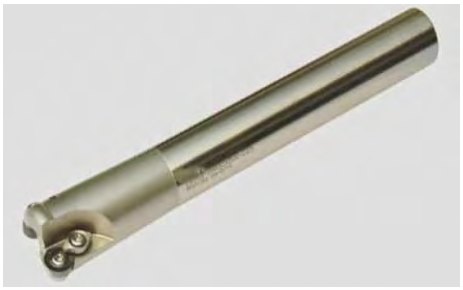

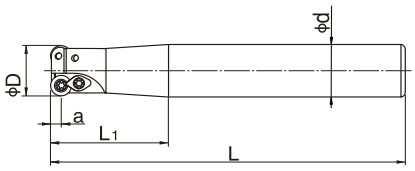

A型
A type

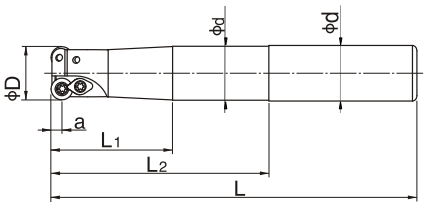

B型
B type

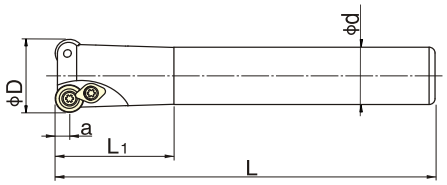

C型
C type

型号 Cat. No	刃数 No.of flutes	样式 Manner	尺寸 Size(mm) D	d	L	L1	L2	a	适用刀片 Applicable inserts	压板 Clamp	螺钉 Screw	扳手 Wrench
EMRW–4R×12×120	1	A	12	12	120	40	—	4	RPMT 08T2 MOE	—		
EMRW–4R×13×120–C12	1	A	13	12	120	40	—	4				
EMRW–4R×16×120	2	A	16	16	120	40	—	4	RPMT 08T2 MOE	A–4R	M3×7	T8F T8
EMRW–4R×16×160	2	A	16	16	160	40	—	4				
EMRW–4R×16×160–C15	2	A	16	15	160	40	—	4				
EMRW–4R×16×200	2	B	16	16	200	40	100	4				
EMRW–4R×17×160–C16	2	A	17	16	160	40	—	4				
EMRW–4R×20×160	2	A	20	20	160	50	—	4				
EMRW–4R×20×200	2	B	20	20	200	50	100	4				
EMRW–4R×21×160–C20	2	A	21	20	160	50	—	4				
EMRW–6R×32×160–C25	2	C	32	25	160	50	—	6	RPMW\T 1204 MO	A–6R	M4×10	T15F T15
EMRW–6R×32×160	2	A	32	32	160	50	—	6				
EMRW–6R×32×200–C25	2	C	32	25	200	60	—	6				
EMRW–6R×32×200	2	A	32	32	200	80	—	6				
EMRW–6R×35×160–C32	3	C	35	32	160	50	—	6				
EMRW–6R×35×200–C32	3	C	35	32	200	60	—	6				
EMRW–6R×35×250–C32	3	C	35	32	250	60	—	6				
EMRW–6R×35×300–C32	3	C	35	32	300	60	—	6				
EMRW–6R×35×350–C32	3	C	35	32	350	60	—	6				
EMRW–6R×40×160–C32	3	C	40	32	160	50	—	6				
EMRW–6R×40×200–C32	3	C	40	32	200	50	—	6				
EMRW–6R×40×250–C32	3	C	40	32	250	60	—	6				
EMRW–6R×50×200–C32	4	C	50	32	200	60	—	6				

TRS 圆鼻立铣刀杆
TRS round dowel end mill



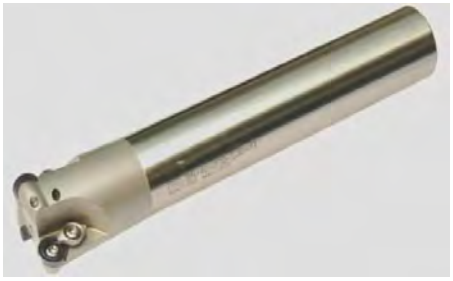

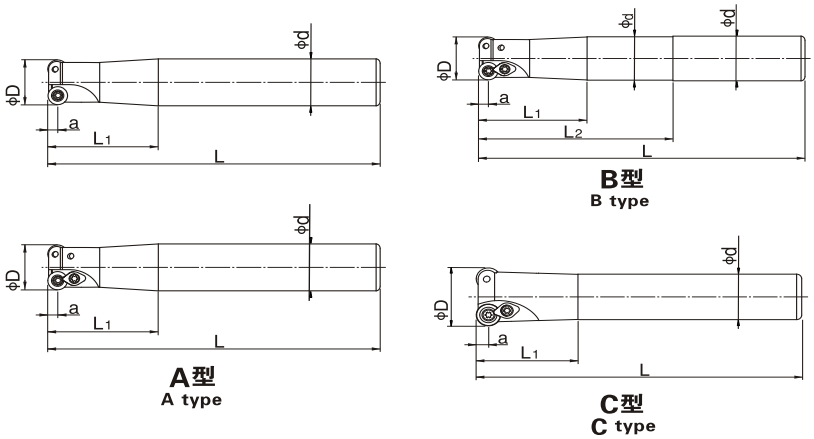

型号 Cat. No	刃数 No.of flutes	样式 Manner	尺寸 Size(mm) D	d	L	L1	L2	a	适用刀片 Applicable inserts	压板 Clamp	螺钉 Screw	扳手 Wrench
TRS–2.5R×8×80	1	A	8	8	80	30	—	2.5	RDMW 0501 MO	—	A18040 M1.8×4	T6F T6
TRS–2.5R×10×120	2	A	10	10	120	30	—	2.5				
TRS–2.5R×12×120	2	A	12	12	120	30	—	2.5				
TRS–3.5R×10×120	1	A	10	10	120	40	—	3.5	RDMW 0702 MO	—	A25060G M2.5×6	T8F T8
TRS–3.5R×12×120	1	A	12	12	120	40	—	3.5				
TRS–4R×12×120	1	A	12	12	120	40	—	4	RDMT 0802 MO	—	A30070E M3×7	
TRS–4R×16×120	2	A	16	16	120	40	—	4				
TRS–4R×16×160	2	A	16	16	160	40	—	4				
TRS–4R×20×160	2	A	20	20	160	50	—	4				
TRS–4R×20×200	2	B	20	20	200	50	100	4				
TRS–5R×20×160	2	A	20	20	160	50	—	5	RDMT 10T3 MO	A–5R	A40090F M4×9 A35100F M3.5×10	T15F T15
TRS–5R×25×160	2	A	25	25	160	50	—	5				
TRS–5R×25×160–C20	2	C	25	20	160	50	—	5				
TRS–5R×25×160–C24	2	A	25	24	160	50	—	5				
TRS–5R×25×200	2	A	25	25	200	75	—	5				
TRS–5R×25×200–C24	2	A	25	24	200	50	—	5				
TRS–5R×25×250	2	B	25	25	250	60	115	5				
TRS–5R×30×160–C25	2	C	30	25	160	50	—	5				
TRS–5R×30×200–C25	2	C	30	25	200	60	—	5				
TRS–5R×30×250–C25	2	C	30	25	250	60	—	5				
TRS–5R×35×160–C32	3	C	35	32	160	50	—	5				
TRS–5R×35×200–C32	3	C	35	32	200	50	—	5				
TRS–5R×35×250–C32	3	C	35	32	250	60	—	5				
TRS–6R×40×200–C32	3	C	40	32	200	60	—	6	RDMT 1204 MO	A–6R	A40100J M4×10	T15F T15
TRS–6R×40×250–C32	3	C	40	32	250	60	—	6				

TJU 钻铣刀杆
TJU borer mill

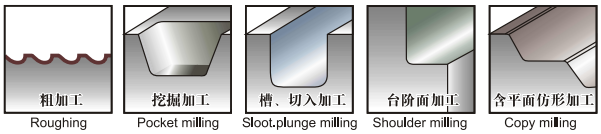

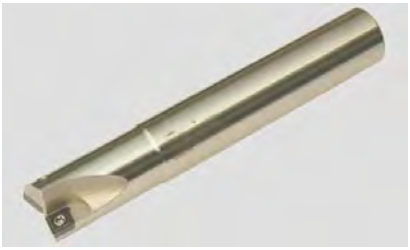

刀片配置表 Inserts assign

刀杆刃徑 Flute diameter	子刃 Slave insert	親刃 Saster insert
Φ10	———	CCMT060204
Φ12–13	———	CPMT080204Z
Φ16–17	CCMT060204	CPMT080204Z
Φ20–21	CCMT060204	CPMT090204Z
Φ25–26	CPMT090308	CPMT120308Z
Φ32–33	CPMT120408	CPMT160408Z
Φ40	CPMT160408	CPMT190408Z

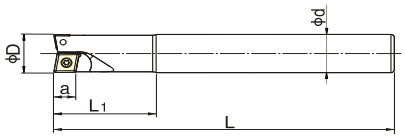

A型
A type

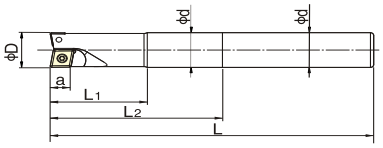

B型
B type

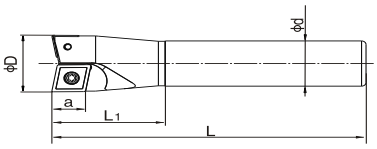

C型
C type

配大小刀片 底刃過中心 鑽銑共用 with big, small inserts blade bottom across center drilling and milling use

型号 Cat. No	刃数 No.of flutes	样式 Manner	尺寸 Size(mm) D	d	L	L1	L2	a	适用刀片 Applicable inserts		螺钉 Screw	扳手 Wrench
TJU–10×120	1	A	10	10	120	30	—	6	CCMT 060204	—	A25060G M2.5×6	T8F T8
TJU–12×120	1	A	12	12	120	40	—	6	—	CPMT 080204Z		
TJU–13×120–C12	1	A	13	12	120	40	—	6				
TJU–16×120	1	A	16	16	120	40	—	6	CCMT 060204	CPMT 080204Z	A25060G M2.5×6	
TJU–16×160	2	A	16	16	160	40	—	6				
TJU–16×180	2	B	16	16	180	40	90	6				
TJU–16×200	2	B	16	16	200	40	100	6				
TJU–17×160–C16	2	A	17	16	160	40	—	6				
TJU–17×200–C16	2	A	17	16	200	40	—	6				
TJU–20×120	2	A	20	20	120	40	—	6	CCMT 060204	CPMT 090204Z	A25060G/A35080F M2.5×6/M3.5×8	T8F/T15F T8/T15
TJU–20×160	2	A	20	20	160	50	—	6				
TJU–20×200	2	B	20	20	200	50	100	6				
TJU–21×160–C20	2	A	21	20	160	40	—	6				
TJU–21×200–C20	2	A	21	20	200	50	—	6				
TJU–25×160	2	A	25	25	160	50	—	9	CPMT 090308	CPMT 120308Z	A40090F M4×9	T15F T15
TJU–25×200	2	A	25	25	200	75	—	9				
TJU–25×250	2	B	25	25	250	115	115	9				
TJU–26×160–C25	2	A	26	25	160	60	—	9				
TJU–26×200–C25	2	A	26	25	200	50	—	9				
TJU–26×250–C25	2	A	26	25	250	60	—	9				
TJU–32×160	2	A	32	32	160	60	—	12	CPMT 120408	CPMT 160408Z	A50120J M5×12	T20F T20
TJU–32×200	2	A	32	32	200	60	—	12				
TJU–32×250	2	A	32	32	250	80	—	12				
TJU–32×300	2	B	32	32	300	60	165	12				
TJU–33×160–C32	2	A	33	32	160	50	—	12				
TJU–33×200–C32	2	A	33	32	200	60	—	12				
TJU–33×250–C32	2	A	33	32	250	80	—	12				
TJU–33×300–C32	2	A	33	32	300	80	—	12				
TJU–33×350–C32	2	A	33	32	350	80	—	12				
TJU–40×200–C32	2	C	40	32	200	60	—	12	CPMT 160408	CPMT 190408Z	A60210J/M6×21 A50120/M5×12	T20F/T30F T20/T30
TJU–40×250–C32	2	C	40	32	250	80	—	12				

T2139 球形精铣刀杆
T2139 copy end fine mill



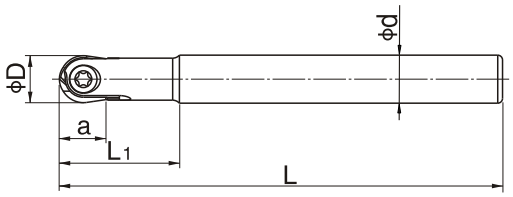

A型
A type

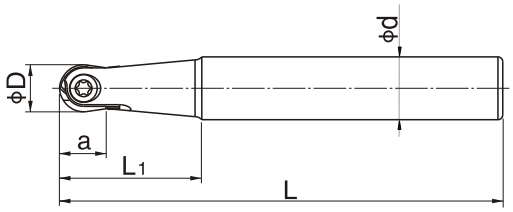

B型
B type

型号 Cat. No	样式 Manner	尺寸 Size(mm) D	d	L	L1	a	适用刀片 Applicable inserts	螺钉 Screw	扳手 Wrench
T2139–4R×110–C10	B	8	10	110	36	5	P 320□–D 08	A30070J–4R	T8F T8
T2139–4R×140–C12	B	8	12	140	45	5			
T2139–5R×130–C10	A	10	10	130	40	7	P 320□–D 10	A40090J–5R	T15F T15
T2139–5R×130–C12	A	10	12	130	50	7			
T2139–5R×160–C10	A	10	10	160	40	7			
T2139–5R×160–C12	B	10	12	160	50	7			
T2139–6R×130–C12	A	12	12	130	40	8	P 320□–D 12	A50090J–6R	T20F T20
T2139–6R×160–C12	A	12	12	160	45	8			
T2139–6R×160–C16	B	12	16	160	60	8			
T2139–8R×160–C16	A	16	16	160	60	10	P 320□–D 16	A50130J–8R	
T2139–8R×200–C16	A	16	16	200	80	10			
T2139–8R×200–C20	B	16	20	200	80	10			
T2139–10R×160–C20	A	20	20	160	60	12.5	P 320□–D 20	A50165J–10R	
T2139–10R×200–C20	A	20	20	200	80	12.5			
T2139–10R×250–C25	B	20	25	250	100	12.5			
T2139–12.5R×200–C25	A	25	25	200	65	15	P 320□–D 25	A60210J–12.5R	T30D/T30

NBD®

PRECISION TOOL

铣削夹持刀具

Milling clamping tools

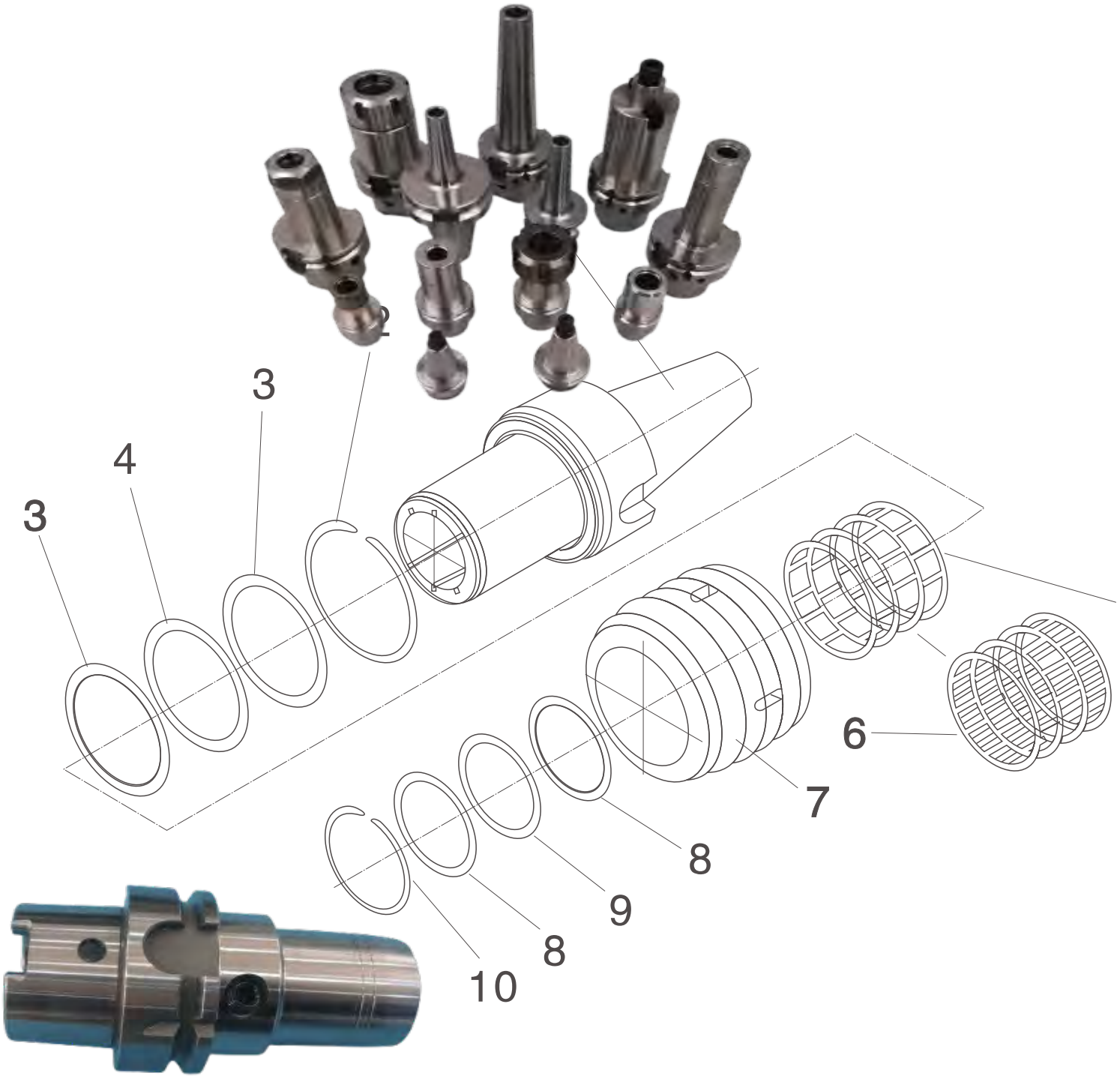

BBT 双接触刀柄

BBT DualDrive (Double Contact) Tool Holders

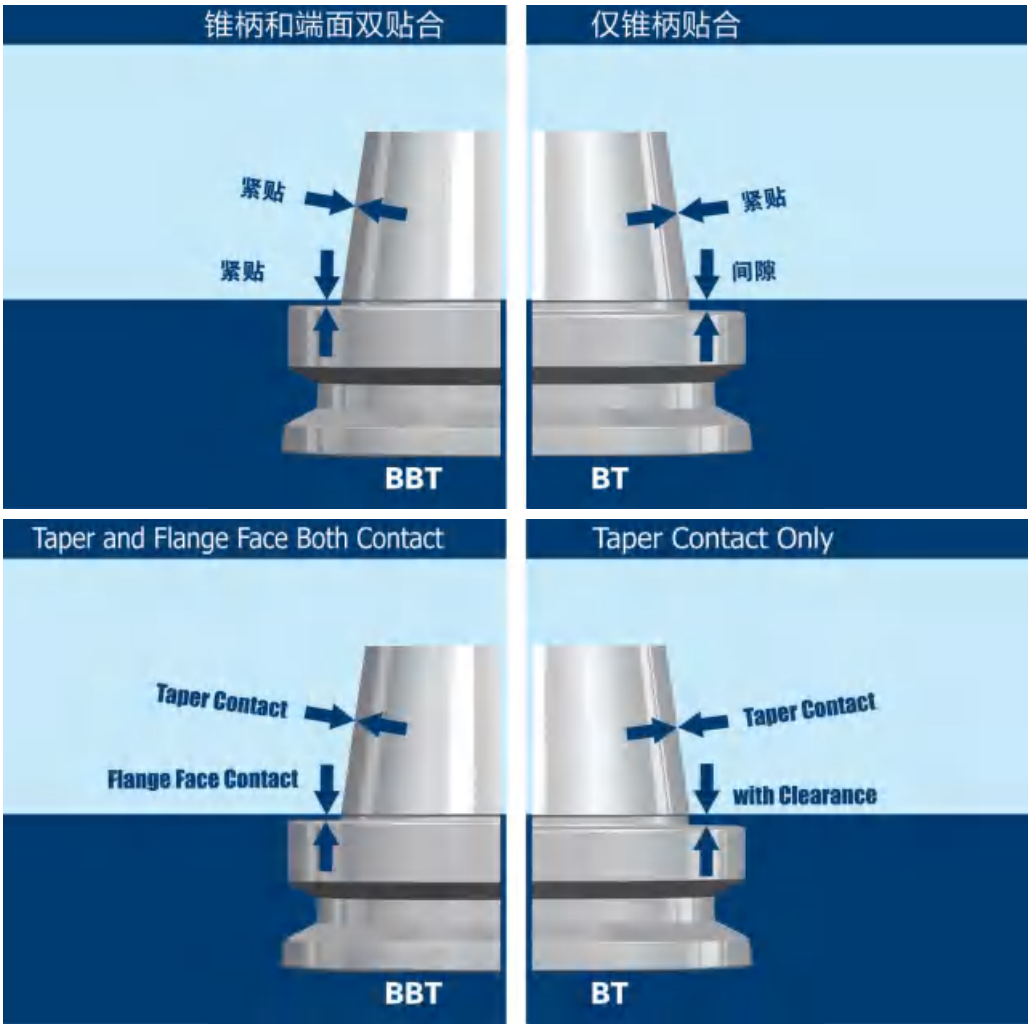

使用 BBT 双接触刀柄优势：

* 高速加工时提高刀柄稳定性；
* 提高工件表面光洁度；
* 提高加工精度；
* 提高 ATC 的重复精度；
* 提高镗孔加工圆度；
* 增加刀具使用寿命 .

BBT Advantages:

* Improve tool holder stability when high speed working.
* Improve workpiece surface finish.
* Improve working dimension accuracy.
* Improve ATC repeatability.
* Improve the roundness when boring operation.
* Extend cutting tool life.

订购说明：
请把 BT 刀柄型号里的 BT 改为 BBT 即可；
为了更好的使用效果，请订购带 BBT 主轴的加工中心。

ORDER SPECIFICATION:
PLEASE CHANGE BT SIZES TO BBT ACCORDINGLY.
PLEASE ORDER BBT SPINDLE FOR BETTER PERFORMANCE.

BBT/BT-ERA UM铣刀柄
BBT/BT-ERA UM Mill chuck



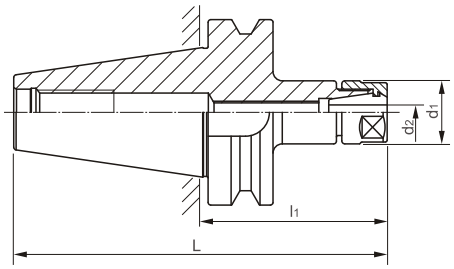

型号 Cat. No	l1	L	d1	夹持范围d2 Clamping range	螺帽 Applied nut	
BT30–ER11A–70	70	118.4	19	0.5–7.0	ER11A	
BT30–ER11A–100	100	148.4				
BT30–ER11A–150	150	198.4				
BT30–ER16A–70	70	118.4	28	0.5–10	ER16A	
BT30–ER16A–100	100	148.4				
BT30–ER16A–150	150	198.4				
BT30–ER20A–70	70	118.4	34	0.5–13	ER20A	
BT30–ER20A–100	100	148.4				
BT30–ER20A–150	150	198.4				
BT40–ER11A–70	70	135.4	19	0.5–7.0	ER11A	
BT40–ER11A–100	100	165.4				
BT40–ER11A–150	150	215.4				
BT40–ER16A–70	70	135.4	28	0.5–10	ER16A	
BT40–ER16A–100	100	165.4				
BT40–ER16A–150	150	215.4				
BT40–ER20A–70	70	135.4	34	0.5–13	ER20A	
BT40–ER20A–100	100	165.4				
BT40–ER20A–150	150	215.4				
BT50–ER16A–70	70	171.8	28	0.5–10	ER16A	
BT50–ER16A–100	100	201.8				
BT50–ER16A–150	150	251.8				
BT50–ER20A–70	70	171.8	34	0.5–13	ER20A	
BT50–ER20A–100	100	201.8				
BT50–ER20A–150	150	251.8				

扳手須另行購置 **The spanner must purchase alone**

BBT/BT-ER UM铣刀柄
BBT/BT-ER UM Mill chuck



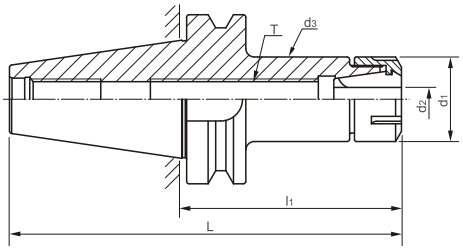

型号 Cat. No	l1	L	d1	夹持范围d2 Clamping range	螺帽 Applied nut		
BT30–ER11M–70	70	118.4	16	0.5–7.0	ER11M		
BT30–ER11M–100	100	148.4					
BT30–ER11M–150	150	198.4					
BT30–ER16M–70	70	118.4	22	0.5–10	ER16M		
BT30–ER16M–100	100	148.4					
BT30–ER16M–150	150	198.4					
BT30–ER20M–70	70	118.4	28	0.5–13	ER20M		
BT30–ER20M–100	100	148.4					
BT30–ER20M–150	150	198.4					
BT30–ER25UM–70	70	118.4	42	0.5–16	ER25UM		
BT30–ER25UM–100	100	148.4					
BT30–ER25UM–150	150	198.4					
BT30–ER32UM–70	70	118.4	50	0.5–20	ER32UM		
BT30–ER32UM–100	100	148.4					
BT30–ER32UM–150	150	198.4					
BT40–ER11M–70	70	135.4	16	0.5–7	ER11M		
BT40–ER11M–100	100	165.4					
BT40–ER11M–150	150	215.4					
BT40–ER16M–70	70	135.4	22	0.5–10	ER16M		
BT40–ER16M–100	100	165.4					
BT40–ER16M–150	150	215.4					
BT40–ER20M–70	70	135.4	28	0.5–13	ER20M		
BT40–ER20M–100	100	165.4					
BT40–ER20M–150	150	215.4					

扳手須另行購置 **The spanner must purchase alone**

BBT/BT-ER UM铣刀柄
BBT/BT-ER UM Mill chuck

型号 Cat. No	l1	L	d1	夹持范围d2 Clamping range	螺帽 Applied nut	
BT40–ER25UM–70	70	135.4	42	0.5–16	ER25UM	
BT40–ER25UM–100	100	165.4				
BT40–ER25UM–150	150	215.4				
BT40–ER32UM–70	70	135.4	50	2.0–20	ER32UM	
BT40–ER32UM–100	100	165.4				
BT40–ER32UM–150	150	215.4				
BT40–ER40UM–70	70	135.4	63	5.0–26	ER40UM	
BT40–ER40UM–100	100	165.4				
BT40–ER40UM–150	150	215.4				
BT50–ER16M–70	70	171.8	22	0.5–10	ER16M	
BT50–ER16M–100	100	201.8				
BT50–ER16M–150	150	251.8				
BT50–ER20M–70	70	171.8	28	0.5–13	ER20M	
BT50–ER20M–100	100	201.8				
BT50–ER20M–150	150	251.8				
BT50–ER25UM–70	70	171.8	42	0.5–16	ER25UM	
BT50–ER25UM–100	100	201.8				
BT50–ER25UM–150	150	251.8				
BT50–ER32UM–70	70	171.8	50	2.0–20	ER32UM	
BT50–ER32UM–100	100	201.8				
BT50–ER32UM–150	150	251.8				
BT50–ER32UM–200	200	301.8				
BT50–ER32UM–250	250	351.8				
BT50–ER40UM–70	70	171.8	63	5.0–26	ER40UM	
BT50–ER40UM–100	100	201.8				
BT50–ER40UM–150	150	251.8				
BT50–ER40UM–200	200	301.8				

扳手須另行購置 **The spanner must purchase alone**

BBT/BT-LBK 镗刀 刀柄

BBT/BT-LBK Boring chuck



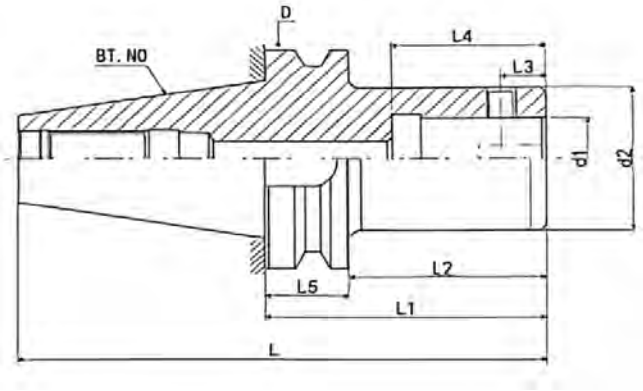

型号 Cat. No	L	L1	L2	L3	L4	L5	d1	d2
BBT30-LBK1-105L	154.3	105	84	5.05	30	21	19	46
BBT30-LBK2-75L	124.3	75	54	6.62	31	21	24	46
BBT30-LBK2-120L	169.3	120	99	6.62	31	21	24	46
BBT30-LBK3-80L	129.3	80	59	8	35	21	31	46
BBT30-LBK3-120L	169.3	120	99	8	35	21	31	48
BBT30-LBK4-85L	134.3	85	64	10	39	21	39	46
BBT30-LBK4-120L	169.3	120	99	10	39	21	39	46
BBT30-LBK5-85L	134.3	85	64	13	45	21	50	46
BBT30-LBK5-120L	169.3	120	99	13	45	21	50	46
BBT30-LBK6-85L	134.3	85	64	16	55	21	63	46
BBT30-LBK6-135L	184.3	135	114	16	55	21	63	46
BBT40-LBK1-105L	171.4	105	79	5.05	30	26	19	63
BBT40-LBK2-80L	146.4	80	54	6.62	31	26	24	63
BBT40-LBK2-120L	186.4	120	94	6.62	31	26	24	63
BBT40-LBK3-85L	151.4	85	59	8	35	26	31	63
BBT40-LBK3-135L	201.4	135	109	8	35	26	31	63
BBT40-LBK3-165L	231.4	165	139	8	35	26	31	63
BBT40-LBK4-90L	156.4	90	64	10	39	26	39	63
BBT40-LBK4-135L	201.4	135	109	10	39	26	39	63
BBT40-LBK4-165L	231.4	165	139	10	39	26	39	63
BBT40-LBK4-195L	261.4	195	169	10	39	26	39	63
BBT40-LBK5-65L	106.4	65	39	13	45	26	50	63
BBT40-LBK5-105L	171.4	105	79	13	45	26	50	63
BBT40-LBK5-135L	201,4	135	100	13	45	26	50	63
BBT40-LBK5-165L	231.4	165	139	13	45	26	50	53
BBT40-LBK5-195L	261.4	195	169	13	45	26	50	63
BBT40-LBK6-65L	131.4	65	39	16	55	26	63	63
BBT40-LBK6-105L	171.4	105	79	16	55	26	63	63
BBT40-LBK6-135L	201.4	135	109	16	55	26	63	53
BBT40-LBK6-165L	231.4	165	139	16	55	26	63	63
BBT40-LBK6-195L	261.4	195	169	16	55	26	63	63
BBT40-LBK6-245L	311.4	245	219	16	55	26	63	63

BBT/BT-GSK 高速铣刀柄

BBT/BT-GSK High speed milling chuck



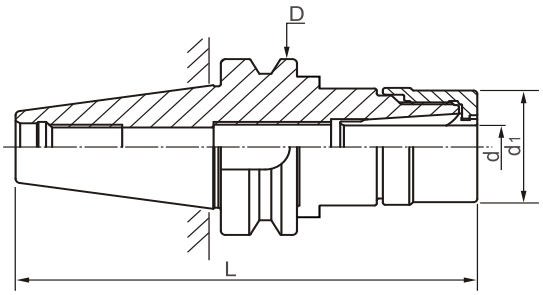

型号 Cat. No	L	D	螺帽 Applied nut	夹持范围d2 Clamping range	d1	
BT30–GSK6–60	108.4	46	GSK6	0.7–6.0	19.5	
BT30–GSK6–90	138.4					
BT30–GSK10–60	108.4		GSK10	1.75–10.0	27.5	
BT30–GSK10–90	138.4					
BT30–GSK16–90	138.4		GSK16	2.75–16.0	40	
BT30–GSK16–120	168.4					
BT30–GSK16–150	198.4					
BT30–GSK25–90	138.4		GSK25	16.0–25.4	55	
BT40–GSK6–60	125.4	63	GSK6	0.7–6.0	19.5	
BT40–GSK6–90	155.4					
BT40–GSK6–120	185.4					
BT40–GSK10–60	125.4		GSK10	1.75–10.0	27.5	
BT40–GSK10–90	155.4					
BT40–GSK10–120	185.4					
BT40–GSK10–150	215.4					
BT40–GSK16–60	130.4		GSK16	2.75–16.0	40	
BT40–GSK16–90	155.4					
BT40–GSK16–120	185.4					
BT40–GSK16–150	215.4					
BT40–GSK25–90	155.4		GSK25	16.0–25.4	55	
BT40–GSK25–120	185.4					
BT50–GSK10–105	206.8	100	GSK10	1.75–10.0	27.5	
BT50–GSK10–135	236.8					
BT50–GSK10–165	266.8					
BT50–GSK16–105	206.8		GSK16	2.75–16.0	40	
BT50–GSK16–135	236.8					
BT50–GSK16–165	266.8					
BT50–GSK16–195	296.8					
BT50–GSK25–105	206.8		GSK25	16.0–25.4	55	
BT50–GSK25–135	236.8					
BT50–GSK25–165	266.8					
BT50–GSK25–195	296.8					

扳手须另行購置 **The spanner must purchase alone**

BBT/BT-C 强力刀柄

BBT/BT-C Multi lock milling chuck



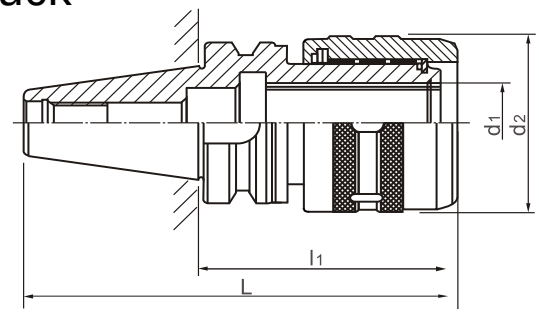

型号 Cat. No	L	L1	d1	d2
BT30-C20-90	138.4	90	20	55
BT30-C25-90	138.4	90	25	58
BT30-C32-105	153.8	105	32	68
BT40-C20-90	155.4	90	20	55
BT40-C22-90	155.4	90	22	58
BT40-C25-90	155.4	90	25	58
BT40-C32-95	170.4	95	32	68
BT40-C32-110	175.4	110	32	68
BT40-C32-135	200.4	135	32	68
BT40-C32-150	215.4	150	32	68
BT40-C32-200	265.4	200	32	68
BT40-C32-300	401.8	300	32	68
BT50-C20-90	155.4	90	20	55
BT50-C22-90	155.4	90	22	58
BT50-C25-90	155.41	90	25	58
BT50-C25-135	200.4	135	25	58
BT50-C32-105	206.4	105	32	68
BT50-C32-135	236.8	135	32	68
BT50-C32-165	266.8	165	32	68
BT50-C32-200	301.8	200	32	68
BT50-C32-300	401.8	300	32	68
BT50-C32-500	601.8	500	32	68
BT50-C42-120	221.8	120	42	84
BT50-C42-135	236.8	135	42	84
BT50-C42-165	266.8	165	42	84
BT50-C42-200	301.8	200	42	84
BT50-C42-300	401.8	300	42	84

BBT/BT-APU 钻夹头刀柄

BBT/BT-APU Drill chuck



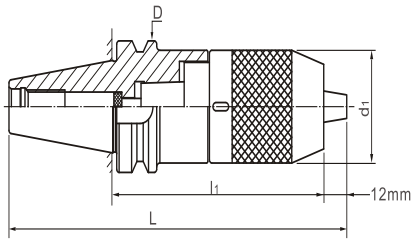

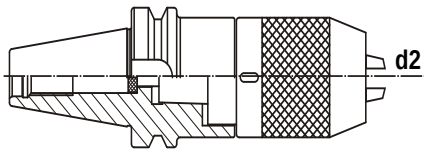

型号 Cat. No	L	L1		D	d1	d2	夹持范围 Clamping range
BT30–APU8–80	140.4	80		46	37	8	0.5–8
BT30–APU13–110	170.4	110			50	13	1–13
BT30–APU16–115	175.4	115			57	16	1–16
BT40–APU8–85	162.4	85		63	37	8	0.5–8
BT40–APU13–110	187.4	110			50	13	1–13
BT40–APU13–150	227.4	150					
BT40–APU16–110	187.4	110			57	16	1–16
BT40–APU16–150	227.4	150					
BT50–APU8–90	203.8	90		100	37	8	0.5–8
BT50–APU13–105	218.8	105			50	13	1–13
BT50–APU13–130	243.8	130					
BT50–APU13–180	293.8	180					
BT50–APU16–105	218.8	105			57	16	1–16
BT50–APU16–130	243.8	130					
BT50–APU16–190	303.8	190					

BBT/BT-FMB 平面铣刀柄(英制)

BBT/BT-FMB Face mill arbor (English)

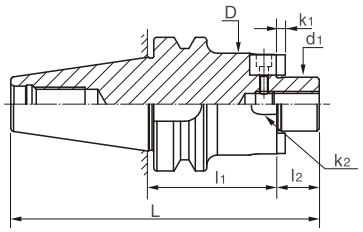

Fig Ⅰ



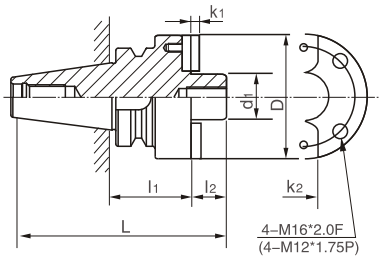

Fig Ⅱ

型号 Cat. No	Fig	L	l1	L2	D	d1	K1	K2
BT30–FMA25.4–45	Ⅰ	113.4	45	20	48	25.4	4.52	9.525
BT30–FMA25.4–60	Ⅰ	128.4	60					
BT30–FMA31.75–45	Ⅰ	115.4	45	22	78	31.75	6.7	12.70
BT40–FMA25.4–45	Ⅰ	130.4	45	20	48	25.4	4.52	9.525
BT40–FMA25.4–60	Ⅰ	145.4	60					
BT40–FMA25.4–100	Ⅰ	185.4	100					
BT40–FMA25.4–150	Ⅰ	235.4	150					
BT40–FMA25.4–200	Ⅰ	285.4	200					
BT40–FMA31.75–45	Ⅰ	132.4	45	22	78	31.75	6.7	12.70
BT40–FMA31.75–60	Ⅰ	147.4	60					
BT40–FMA31.75–100	Ⅰ	187.4	100					
BT40–FMA38.1–45	Ⅰ	135.4	45	25	89	38.1	8.87	15.875
BT40–FMA38.1–60	Ⅰ	150.4	60					
BT40–FMA50.8–45	Ⅰ	146.4	45	36	98	50.8	9.75	19.05
BT40–FMA50.8–60	Ⅰ	161.4	60					
BT50–FMA25.4–45	Ⅰ	166.8	45	20	48	25.4	4.52	9.525
BT50–FMA25.4–60	Ⅰ	181.8	60					
BT50–FMA25.4–100	Ⅰ	221.8	100					
BT50–FMA25.4–150	Ⅰ	271.8	150					
BT50–FMA25.4–200	Ⅰ	321.8	200					
BT50–FMA31.75–45	Ⅰ	168.8	45	22	78	31.75	6.7	12.70
BT50–FMA31.75–60	Ⅰ	183.8	60					
BT50–FMA31.75–100	Ⅰ	223.8	100					
BT50–FMA38.1–45	Ⅰ	171.8	45	25	89	38.1	8.87	15.875
BT50–FMA38.1–60	Ⅰ	186.8	60					
BT50–FMA50.8–45	Ⅰ	182.8	45	36	98	50.8	9.75	19.05
BT50–FMA50.8–60	Ⅰ	197.8	60					
BT50–FMA47.625–75	Ⅱ	212.8	75	32	98	47.625	9.75	19.05

BBT/BT-FMB 平面铣刀柄(公制)

BBT/BT-FMB Face mill arbor （Metric)



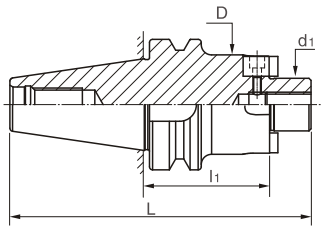

Fig Ⅰ

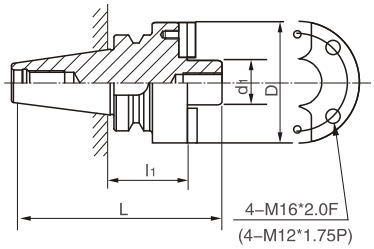

Fig Ⅱ

型号 Cat. No	Fig	L	l1		D	d1	
BT30–FMB22–45	Ⅰ	111.4	45		48	22	
BT30–FMB22–60	Ⅰ	126.4	60				
BT30–FMB27–45	Ⅰ	113.4	45		60	27	
BT30–FMB27–60	Ⅰ	128.4	60				
BT30–FMB32–45	Ⅰ	115.4	45		78	32	
BT30–FMB32–60	Ⅰ	130.4	60				
BT40–FMB22–45	Ⅰ	128.4	45		48	22	
BT40–FMB22–60	Ⅰ	143.4	60				
BT40–FMB22–100	Ⅰ	183.4	100				
BT40–FMB22–150	Ⅰ	233.4	150				
BT40–FMB22–200	Ⅰ	283.4	200				
BT40–FMB22–250	Ⅰ	333.4	250				
BT40–FMB27–45	Ⅰ	130.4	45		60	27	
BT40–FMB27–60	Ⅰ	145.4	60				
BT40–FMB27–100	Ⅰ	185.4	100				
BT40–FMB32–45	Ⅰ	132.4	45		78	32	
BT40–FMB32–60	Ⅰ	147.4	60				
BT40–FMB40–60	Ⅰ	150.4	60		89	40	
BT50–FMB22–45	Ⅰ	164.8	45		48	22	
BT50–FMB22–60	Ⅰ	179.8	60				
BT50–FMB22–100	Ⅰ	219.8	100				
BT50–FMB22–150	Ⅰ	269.8	150				
BT50–FMB22–200	Ⅰ	319.8	200				
BT50–FMB22–250	Ⅰ	369.8	250				
BT50–FMB22–300	Ⅰ	419.8	300				
BT50–FMB22–350	Ⅰ	469.8	350				
BT50–FMB22–400	Ⅰ	519.8	400				
BT50–FMB22–500	Ⅰ	619.8	500				
BT50–FMB27–45	Ⅰ	166.8	45		60	27	
BT50–FMB27–60	Ⅰ	181.8	60				
BT50–FMB27–100	Ⅰ	221.8	100				
BT50–FMB27–150	Ⅰ	271.8	150				
BT50–FMB32–45	Ⅰ	168.8	45		78	32	
BT50–FMB32–60	Ⅰ	183.8	60				
BT50–FMB32–100	Ⅰ	223.8	100				
BT50–FMB32–150	Ⅰ	273.8	150				
BT50–FMB40–60	Ⅰ	186.8	60		89	40	
BT50–FMB40–100	Ⅰ	226.8	100				
BT50–FMB40–150	Ⅰ	276.8	150				
BT50–FMB60–75	Ⅱ	201.8	75		140	60	

BBT/BT-SLN 侧固式刀柄

BBT/BT-SLN Side lock holder



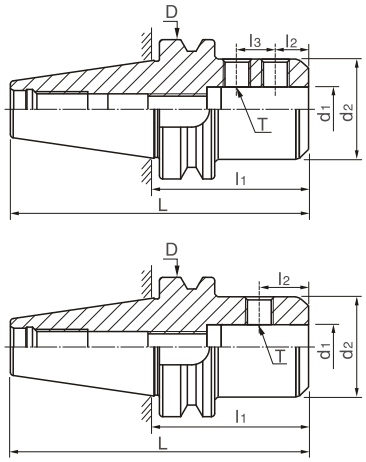

型号 Cat. No	d1	d2	l1	L	L2	l3	D	T
BT30–SLN6–60	6	25	60	108.4	18	—	46	M6×1.0P
BT30–SLN8–60	8	28	60	108.4	18	—		M8×1.25P
BT30–SLN10–60	10	35	60	108.4	20	—		M10×1.5P
BT30–SLN12–60	12	42	60	108.4	22.5	—		M12×1.75P
BT30–SLN16–75	16	48	75	123.4	24	—		M14×2.0P
BT30–SLN20–75	20	52	75	123.4	25	—		M16×2.0P
BT30–SLN25–90	25	65	90	138.4	24	25		M18×2.0P
BT30–SLN32–100	32	72	100	148.4	24	28		M20×2.0P
BT40–SLN6–60	6	25	60	125.4	18	—	63	M6×1.0P
BT40–SLN8–60	8	28	60	125.4	18	—		M8×1.25P
BT40–SLN10–60	10	35	60	125.4	20	—		M10×1.5P
BT40–SLN12–60	12	42	60	125.4	22.5	—		M12×1.75P
BT40–SLN16–75	16	48	75	140.4	24	—		M14×2.0P
BT40–SLN20–75	20	52	75	140.4	25	—		M16×2.0P
BT40–SLN25–100	25	65	100	165.4	24	25		M18×2.0P
BT40–SLN32–100	32	72	100	165.4	24	28		M20×2.0P
BT40–SLN40–100	40	90	100	165.4	30	32		M20×2.0P
BT40–SLN42–100	42	90	100	165.4	30	32		M20×2.0P
BT50–SLN6–90	6	25	90	191.8	18	—	100	M6×1.0P
BT50–SLN8–90	8	28	90	191.8	18	—		M8×1.25P
BT50–SLN10–90	10	35	90	191.8	20	—		M10×1.5P
BT50–SLN12–90	12	42	90	191.8	22.5	—		M12×1.75P
BT50–SLN16–90	16	48	90	191.8	24	—		M14×2.0P
BT50–SLN20–105	20	52	105	206.8	25	—		M16×2.0P
BT50–SLN25–105	25	65	105	206.8	24	25		M18×2.0P
BT50–SLN32–105	32	72	105	206.8	24	28		M20×2.0P
BT50–SLN40–110	40	90	110	211.8	30	32		M20×2.0P
BT50–SLN42–120※	42	90	120	221.8	30	32		M20×2.0P
BT50–SLN50–120E※	50	98	120	221.8	35	35		M20×2.5P
BT50–SLN50.8–120※	50.8	98	120	221.8	35	35		M20×2.5P
BT50–SLN63–150E※	63	123	150	251.8	40	40		M20×2.5P

BT–MTA 莫氏钻套刀柄
BT–MTA Mose taper adapter A type



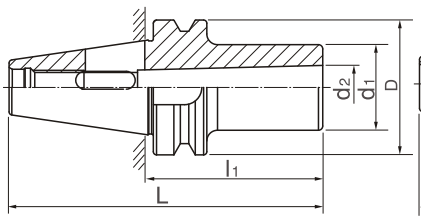

Fig Ⅰ

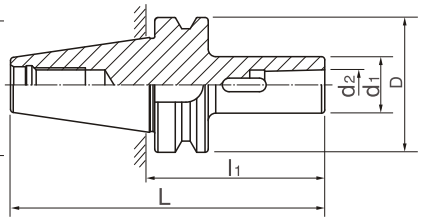

Fig Ⅱ

型号 Cat. No	Fig	使用鑽頭	L	l1	D	d1	d2
BT30–MTA1–45	Ⅰ	2.0–14.0	93.4	45	46	25	12.065
BT30–MTA1–105	Ⅱ	2.0–14.0	153.4	105			
BT30–MTA2–60	Ⅰ	14.1–23.0	108.4	60		32	17.780
BT30–MTA2–120	Ⅱ	14.1–23.0	168.4	120			
BT30–MTA3–80	Ⅰ	23.1–32.0	128.4	80		40	23.825
BT40–MTA1–45	Ⅰ	2.0–14.0	110.4	45	63	25	12.065
BT40–MTA1–120	Ⅱ	2.0–14.0	185.4	120			
BT40–MTA2–60	Ⅰ	14.1–23.0	125.4	60		32	17.780
BT40–MTA2–120	Ⅱ	14.1–23.0	185.4	120			
BT40–MTA3–75	Ⅰ	23.1–32.0	140.4	75		40	23.825
BT40–MTA3–135	Ⅱ	23.1–32.0	200.4	135			
BT40–MTA4–95	Ⅰ	32.0–50.0	160.4	95		50	31.267
BT40–MTA4–165	Ⅱ	32.0–50.0	230.4	165			
BT50–MTA1–45	Ⅰ	2.0–14.0	146.8	45	100	25	12.065
BT50–MTA1–120	Ⅱ	2.0–14.0	221.8	120			
BT50–MTA1–180	Ⅱ	2.0–14.0	281.8	180			
BT50–MTA2–60	Ⅰ	14.1–23.0	161.8	60		32	17.780
BT50–MTA2–135	Ⅱ	14.1–23.0	236.8	135			
BT50–MTA2–180	Ⅱ	14.1–23.0	281.8	180			
BT50–MTA3–65	Ⅰ	23.1–32.0	166.8	65		40	23.825
BT50–MTA3–150	Ⅱ	23.1–32.0	251.8	150			
BT50–MTA3–180	Ⅱ	23.1–32.0	281.8	180			
BT50–MTA4–95	Ⅰ	32.0–50.0	196.8	95		50	31.267
BT50–MTA4–180	Ⅱ	32.0–50.0	281.8	180			
BT50–MTA5–105	Ⅰ	50.0–75.0	206.8	105		65	44.399

BT–MTB 莫氏钻铣刀柄
BT–MTB Mose taper adapter B type



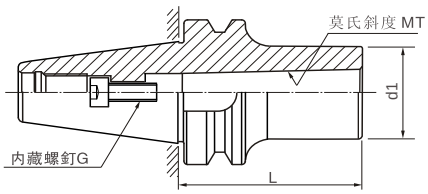

Fig Ⅰ

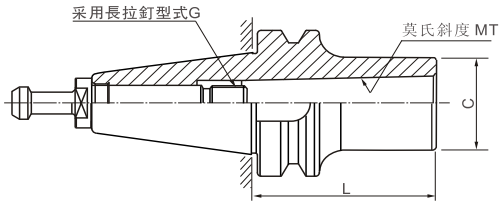

Fig Ⅱ

型号 Cat. No	Fig	莫氏斜度MT	L	d1	d2	G
BT30–MTB1–45	Ⅰ	MTB1	45	25	12.065	M6
BT30–MTB2–60	Ⅰ	MTB2	60	32	17.780	M10
BT40–MTB1–45	Ⅰ	MTB1	45	25	12.065	M6
BT40–MTB2–60	Ⅰ	MTB2	60	32	17.780	M10
BT40–MTB3–75	Ⅰ	MTB3	75	40	23.825	M12
BT40–MTB4–90	Ⅱ	MTB4	90	48	31.267	M16
BT50–MTB1–45	Ⅰ	MTB1	45	25	12.065	M6
BT50–MTB2–45	Ⅰ	MTB2	45	32	17.780	M10
BT50–MTB3–60	Ⅰ	MTB3	60	40	23.825	M12
BT50–MTB4–75	Ⅰ	MTB4	75	50	31.267	M16
BT50–MTB5–120	Ⅱ	MTB5	120	70	44.399	M20

BT40–MTB4/BT50–MTB5拉釘不屬標準配套件，須單獨購買
BT40–MTB4/BT50–MTB5 **the puller bolt is not standard fitting,must purchase alone**

NT–ER 铣刀柄
NT–ER Mill chuck



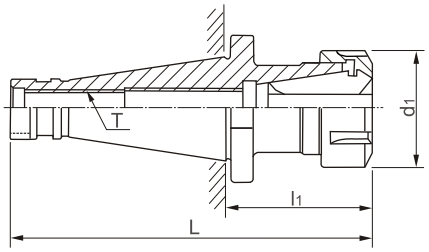

型号 Cat. No	L1	L	d1	DRAWBOLT	
				INCH	METRIC
NT30–ER16A–45	45	113.4	28	1/2"–12UNC	M12×1.75
NT30–ER20A–45	45	113.4	34		
NT30–ER25UM–55	55	123.4	42		
NT30–ER32UM–60	60	128.4	50		
NT30–ER40UM–70	70	138.4	63		
NT40–ER16A–45	45	138.4	28	5/8"–11UNC	M16×2.0
NT40–ER20A–45	45	138.4	34		
NT40–ER25UM–55	55	148.4	42		
NT40–ER32UM–60	60	153.4	50		
NT40–ER40UM–70	70	163.4	63		
NT50–ER32UM–75	75	201.8	50	1"–8UNC	M24×3.0
NT50–ER40UM–80	80	206.8	63		
NT50–ER50KM–80	80	206.8	78		

扳手须另行購置 The spanner must purchase alone

NT–OZ 铣刀柄
NT–OZ Mill chuck



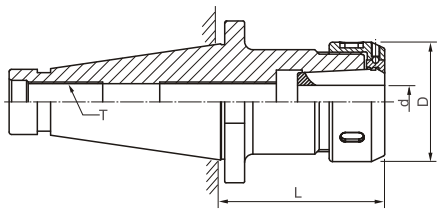

型号 Cat. No	D	d	L	适应筒夹	DRAWBOLT	
					INCH	METRIC
NT30–OZ25–70	62	3–25	70	OZ25	1/2"–12UNC	M12×1.75
NT30–OZ32–70	72	6–32	70	OZ32		
NT40–OZ25–70	62	3–25	70	OZ25	5/8"–11UNC	M16×2.0
NT40–OZ32–70	72	6–32	70	OZ32		
NT50–OZ25–80	62	3–25	80	OZ25	1"–8UNC	M24×3.0
NT50–OZ32–80	72	6–32	80	OZ32		

扳手须另行購置 The spanner must purchase alone

NT–C 强力型铣刀夹头
NT–C Multi lock milling chuck

DIN 2080



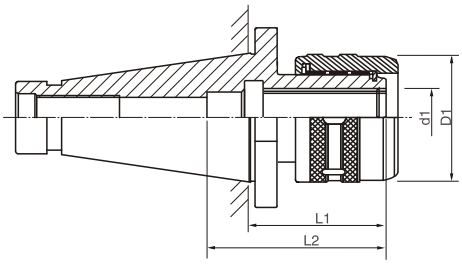

型号 Cat. No	d1	D1	L1	L2	DRAWBOLT	
					INCH	METRIC
NT30–C20–65	20	55	65	60	1/2"–12UNC	M12×1.75
NT40–C20–70	20	55	70	60	5/8"–11UNC	M16×2.0
NT40–C32–80	32	73	80	70		
NT50–C32–90	32	73	90	70	1"–8UNC	M24×3.0
NT50–C42–110	42	90	110	90		
NT60–C42–110	42	90	110	120	11/4"–7UNC	M30×3.5

扳手須另行購置 The spanner must purchase alone

NT–APU 直接式钻夹头
NT–APU Integrated keyless drill chuck

DIN 2080



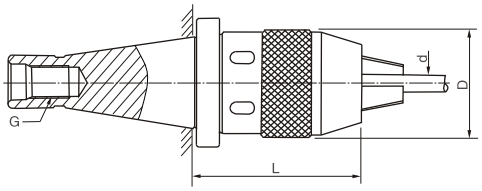

型号 Cat. No	L	D	夹持能力 Φd	G	DRAWBOLT	
					INCH	METRIC
NT30–APU08–80	80	36	0.5–8	1/2"–12UNC	1/2"–12UNC	M12×1.75
NT30–APU13–100	100	50	0.5–13			
NT40–APU08–85	85	36	0.5–8	5/8"–11UNC	5/8"–11UNC	M16×2.0
NT40–APU13–110	110	50	0.5–13			
NT40–APU16–110	110	57	3–16			
NT50–APU13–110	110	50	0.5–13	1"–8UNC	1"–8UNC	M24×3.0
NT50–APU16–100	110	57	3–16			

扳手須另行購置 The spanner must purchase alone

NT–FMB 平面铣刀柄（公制轴芯）
NT–FMB Face mill arbor(Metric)



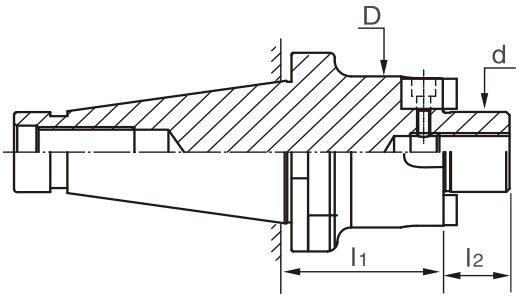

型号 Cat. No	轴径d	L1	L2	D	
NT30–FMB22–35	22	35	19	48	
NT30–FMB27–35	27	35	21	58	
NT30–FMB32–50	32	50	24	78	
NT30–FMB40–60	40	60	27	80	
NT40–FMB22–35	22	35	19	48	
NT40–FMB27–35	27	35	21	58	
NT40–FMB32–50	32	50	24	78	
NT40–FMB40–60	40	60	27	80	
NT50–FMB22–45/100	22	45/100	19	48	
NT50–FMB27–45/100	27	45/100	21	58	
NT50–FMB32–45/100	32	45/100	24	78	
NT50–FMB40–60	40	60	27	80	

NT–SLA 侧固式铣刀柄
NT–SLA Side lock holder



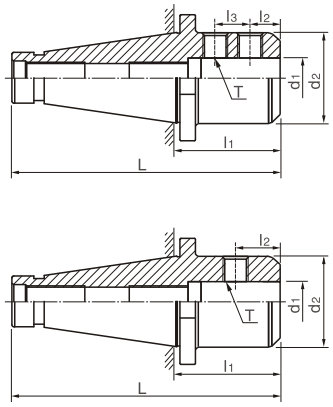

型号 Cat. No	d1	d2	l1	l2	l3	T	DRAWBOLT	
							INCH	METRIC
NT30–SLA12–55	12	40	55	22.5	—	M12×1.75	1/2"–12UNC	M12×1.75
NT30–SLA16–60	16	45	60	24	—	M14×2.0		
NT30–SLA20–65	20	50	65	25	—	M16×2.0		
NT30–SLA25–75	25	50	75	24	25	M18×2.0		
NT40–SLA12–55	12	40	55	22.5	—	M12×1.75	5/8"–11UNC	M16×2.0
NT40–SLA16–60	16	45	60	24	—	M14×2.0		
NT40–SLA20–65	20	50	65	25	—	M16×2.0		
NT40–SLA25–75	25	50	75	24	25	M18×2.0		
NT40–SLA32–90	32	60	90	24	28	M20×2.0		
NT40–SLA42–70	42	80	70	30	32	M20×2.0		
NT50–SLA12–63	12	40	63	22.5	—	M12×1.75	1"–8UNC	M24×3.0
NT50–SLA16–63	16	45	63	24	—	M14×2.0		
NT50–SLA20–63	20	50	63	24	25	M16×2.0		
NT50–SLA25–75	25	50	75	24	25	M18×2.0		
NT50–SLA32–80	32	60	80	24	28	M20×2.0		
NT50–SLA42–100	42	80	100	30	32	M20×2.0		

型号 Cat. No	d1	d2	l1	l2	l3	T	DRAWBOLT	
							INCH	METRIC
NT50–SLA16–63	16	45	150	24	25	M14×2.0	1"–8UNC	M24×3.0
NT50–SLA20–63	20	50	150	25	25	M16×2.0		
NT50–SLA25–75	25	50	150	24	28	M18×2.0		
NT50–SLA32–80	32	60	150	24	28	M20×2.0		
NT50–SLA42–100	42	80	150	30	32	M20×2.0		

NT–MTA
NT–MTA Mose taper adapter A type



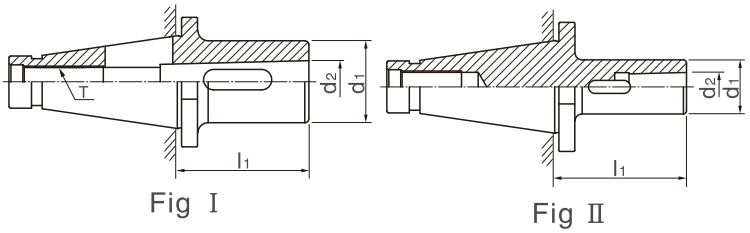

Fig Ⅰ Fig Ⅱ

Cat. No	Fig		d2	L1	d1	DRAWBOLT	
						INCH	METRIC
NT30–MTA1–40	Ⅰ	2.0–14.0	12.065	40	25	1/2"–12UNC	M12×1.75
NT30–MTA2–40	Ⅰ	14.1–23.0	17.780	40	32		
NT30–MTA3–70	Ⅰ	23.1–32.0	23.825	70	40		
NT40–MTA1–30	Ⅰ	2.0–14.0	12.065	30	25	5/8"–11UNC	M16×2.0
NT40–MTA2–30	Ⅰ	14.1–23.0	17.780	30	32		
NT40–MTA3–45	Ⅰ	23.1–32.0	23.825	45	40		
NT40–MTA4–90	Ⅰ	32.0–50.0	31.267	90	50		
NT50–MTA1–30	Ⅰ	2.0–14.0	12.065	30	25	1"–8UNC	M24×3.0
NT50–MTA2–45	Ⅰ	14.1–23.0	17.780	45	32		
NT50–MTA2–120	Ⅱ	14.1–23.0	17.780	120	32		
NT50–MTA3–45	Ⅰ	23.1–32.0	23.825	45	40		
NT50–MTA3–135	Ⅱ	23.1–32.0	23.825	135	40		
NT50–MTA4–75	Ⅰ	32.0–50.0	31.267	75	50		
NT50–MTA4–180	Ⅱ	32.0–50.0	31.267	180	50		
NT50–MTA5–83	Ⅰ	50.0–75.0	44.399	83	65		
NT50–MTA5–200	Ⅱ	50.0–75.0	44.399	200	65		

SK DAT(JT)–ERA
SK DAT(JT)–ERA Mill chuck

DIN 69871
DIN 6499



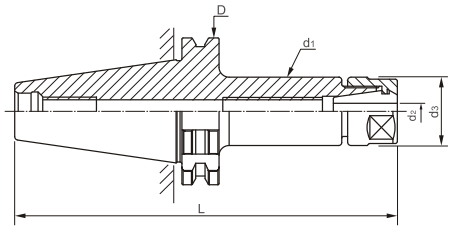

Cat. No	L	D	d1	Clamping range	d3	Applied nut	
SK30–ER11A–80	127.8	50	19	0.5–7.0	19	ER11A	
SK30–ER16A–63	110.8		28	0.5–10	28	ER16A	
SK30–ER16A–120	167.8						
SK30–ER20A–63	110.8		34	0.5–13	34	ER20A	
SK30–ER20A–120	167.8						
SK40–ER11A–80	148.4	63.55	19	0.5–7.0	19	ER11A	
SK40–ER11A–125	193.4						
SK40–ER16A–70	138.4		28	0.5–10	28	ER16A	
SK40–ER16A–100	168.4						
SK40–ER16A–150	218.4						
SK40–ER20A–70	138.4		34	0.5–13	34	ER20A	
SK40–ER20A–100	168.4						
SK40–ER20A–150	218.4						
SK50–ER16A–100	201.75	97.5	22	0.5–10	28	ER16A	
SK50–EA16A–135	236.75						
SK50–ER16A–160	261.75						
SK50–ER16A–180	281.75						
SK50–ER20A–100	201.75		26.5	0.5–13	34	ER20A	
SK50–ER20A–150	251.75						

SK DAT(JT)–C
SK DAT(JT)–C Multi lock milling chuck

DIN 69871



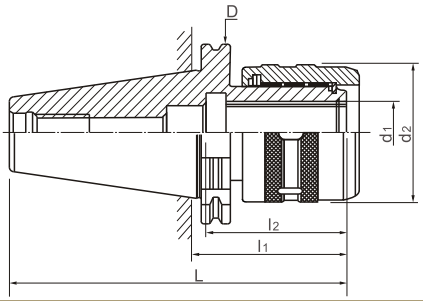

Cat. No	L	L1	L2	D	d1	d2
SK30–C20–80	127.8	80	70	50	C20	55
SK40–C20–80	148.4	80	70	63.55	C20	55
SK40–C20–105	173.4	105				
SK40–C20–135	203.4	135				
SK40–C32–105	173.4	105	75		C32	73
SK40–C32–135	203.4	135				
SK50–C20–105	206.75	105	70	97.5	C20	55
SK50–C20–135	236.75	135				
SK50–C20–165	266.75	165				
SK50–C32–105	206.75	105	75		C32	73
SK50–C32–135	236.75	135				
SK50–C32–165	266.75	165				
SK50–C42–105	206.75	105	90		C42	90
SK50–C42–135	236.75	135				
SK50–C42–165	266.75	165				

扳手須另行購置 **The spanner must purchase alone**

SK DAT(JT)–APU
SK DAT(JT)–APU Integrated keyless drill chuck

DIN 69871



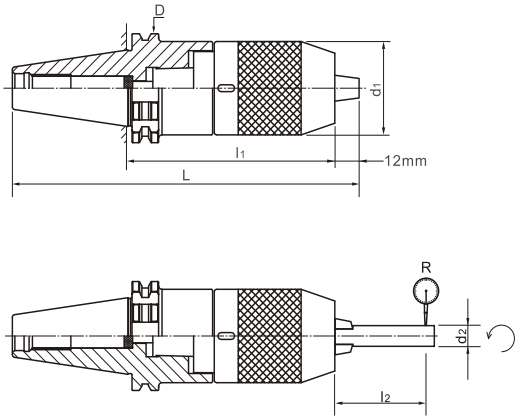

Cat No	L	L1	L2	D	d1	d2	Clamping range	R
SK30–APU8–80	136.8	80	55	50	37	8	0.5–8	0.04
SK30–APU13–120	179.8	120	75	50	50	13	1–13	
SK30–APU16–125	189.8	125	80	50	57	16	1–16	
SK40–APU8–75	152.4	75	55	63.55	37	8	0.5–8	
SK40–APU13–100	180.4	100	75	63.55	50	13	1–13	
SK40–APU16–115	190.4	105	80	63.55	57	16	1–16	
SK50–APU8–75	185.75	75	55	97.50	37	8	0.5–8	
SK50–APU13–100	213.75	100	75	97.50	50	13	1–13	
SK50–APU16–105	218.75	105	80	97.50	57	16	1–16	

扳手須另行購置 **The spanner must purchase alone**

SK DAT(JT)–FMA 平面铣刀柄（英制轴芯）
SK DAT(JT)–FMA Face mill arbor(English)

DIN 69871



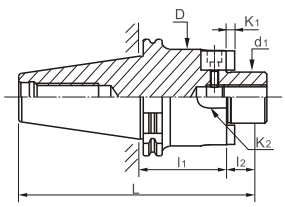

Fig Ⅰ

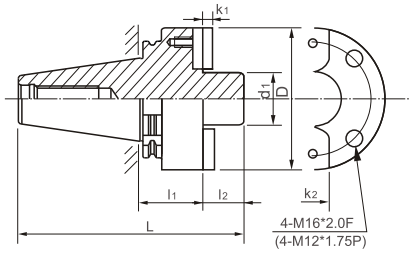

Fig Ⅱ

型号 Cat. No	Fig	L	l1	L2	D	d1	K1	K2
SK30–FMA25.4–45	Ⅰ	113.4	45	20	48	25.4	4.52	9.52
SK30–FMA25.4–60	Ⅰ	128.4	60					
SK30–FMA31.75–45	Ⅰ	115.4	45	22	60	31.75	6.7	12.70
SK40–FMA25.4–45	Ⅰ	130.4	45	20	48	25.4	4.52	9.52
SK40–FMA25.4–60	Ⅰ	145.4	60					
SK40–FMA25.4–100	Ⅰ	185.4	100					
SK40–FMA25.4–150	Ⅰ	235.4	150					
SK40–FMA25.4–200	Ⅰ	285.4	200					
SK40–FMA31.75–45	Ⅰ	132.4	45	22	78	31.75	6.7	12.70
SK40–FMA31.75–60	Ⅰ	147.4	60					
SK40–FMA31.75–100	Ⅰ	187.4	100					
SK40–FMA38.1–45	Ⅰ	135.4	45	25	89	38.1	8.87	15.87
SK40–FMA38.1–60	Ⅰ	150.4	60					
SK40–FMA50.8–45	Ⅰ	146.4	45	36	98	50.8	9.75	19.05
SK40–FMA50.8–60	Ⅰ	161.4	60					
SK50–FMA25.4–45	Ⅰ	166.8	45	20	48	25.4	4.52	9.52
SK50–FMA25.4–60	Ⅰ	181.8	60					
SK50–FMA25.4–100	Ⅰ	221.8	100					
SK50–FMA25.4–150	Ⅰ	271.8	150					
SK50–FMA25.4–200	Ⅰ	321.8	200					
SK50–FMA31.75–45	Ⅰ	168.8	45	22	78	31.75	6.7	12.70
SK50–FMA31.75–60	Ⅰ	183.8	60					
SK50–FMA31.75–100	Ⅰ	223.8	100					
SK50–FMA38.1–45	Ⅰ	171.8	45	25	89	38.1	8.87	15.87
SK50–FMA38.1–60	Ⅰ	186.8	60					
SK50–FMA50.8–45	Ⅰ	182.8	45	36	98	50.8	9.75	19.05
SK50–FMA50.8–60	Ⅰ	197.8	60					
SK50–FMA47.625–75	Ⅱ	212.8	75	32	98	47.625	9.75	19.05

SK DAT(JT)–FMB 平面铣刀柄（公制轴芯）
SK DAT(JT)–FMB Face mill arbor(Metric)

DIN 69871



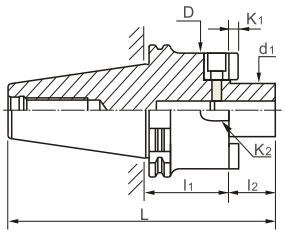

Fig Ⅰ

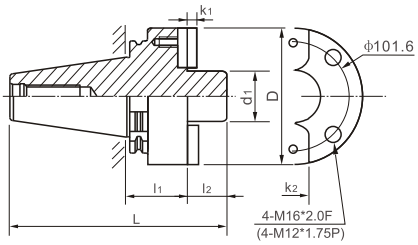

Fig Ⅱ

型号 Cat. No	Fig	L	l1	l2	D	d1	K1	K2
SK30–FMB22–35	Ⅰ	100.8	35	18	48	22	4.8	10
SK30–FMB27–35	Ⅰ	102.8	35	20	60	27	5.8	12
SK40–FMB22–35	Ⅰ	121.4	35	18	48	22	4.8	10
SK40–FMB27–60	Ⅰ	148.4	60	20	60	27	5.8	12
SK40–FMB32–60	Ⅰ	150.4	60	22	78	32	6.8	14
SK40–FMB40–60	Ⅰ	153.4	60	25	89	40	8.3	16
SK50–FMB22–35	Ⅰ	154.75	35	18	48	22	4.8	10
SK50–FMB27–35	Ⅰ	156.75	35	20	60	27	5.8	12
SK50–FMB32–35	Ⅰ	158.75	35	22	78	32	6.8	14
SK50–FMB40–50	Ⅰ	176.75	50	25	89	40	8.3	16
SK50–FMB60–75	Ⅱ	201.75	75	25	140	60	12.5	25.4

SK DAT(JT)–MTA 莫氏钻套柄
SK DAT(JT)–MTA Mose taper adapter A type

DIN 69871
DIN 1835–B



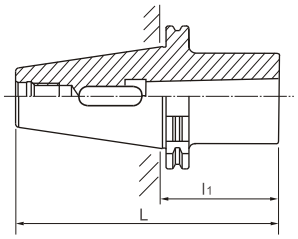

Fig Ⅰ

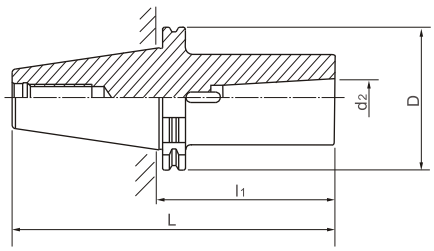

Fig Ⅱ

型号 Cat. No	Fig	钻头直径	L	l1	D		d2
SK30–MTA1–50	Ⅰ	2.0–14.0	97.8	50	50		12.065
SK30–MTA2–60	Ⅰ	14.1–23.0	107.8	60	50		17.780
SK30–MTA3–75	Ⅰ	23.1–32.0	122.8	75	50		23.825
SK40–MTA1–50	Ⅰ	2.0–14.0	118.4	50	63.55		12.065
SK40–MTA2–50	Ⅰ	14.1–23.0	118.4	50	63.55		17.780
SK40–MTA3–70	Ⅰ	23.1–32.0	138.4	70	63.55		23.825
SK40–MTA4–95	Ⅰ	32.0–50.0	153.4	95	63.55		31.267
SK50–MTA1–45	Ⅰ	2.0–14.0	146.75	45	97.50		12.065
SK50–MTA2–60	Ⅰ	14.1–23.0	161.75	60	97.50		17.780
SK50–MTA3–65	Ⅰ	23.1–32.0	166.75	65	97.50		23.825
SK50–MTA4–95	Ⅰ	32.0–50.0	196.75	95	97.50		31.267
SK50–MTA5–105	Ⅰ	50.0–75.0	206.75	105	97.50		44.399

SK DAT(JT)–SLA 侧固式铣刀柄
SK DAT(JT)–SLA Side lock holder

DIN 69871
DIN 1835–B



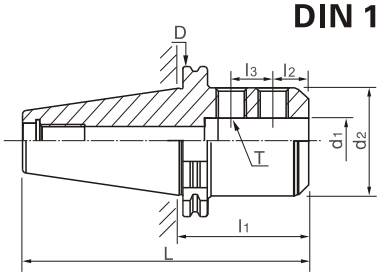

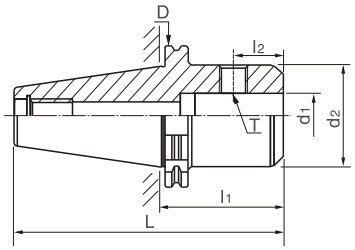

型号 Cat. No	d1	d2	L	l1	l2	l3	D	T
SK30–SLA6–50	6	25	97.8	50	18	—	50	M6×1.0P
SK30–SLA8–50	8	28	97.8	50	18	—		M8×1.25P
SK30–SLA10–50	10	35	97.8	50	20	—		M10×1.5P
SK30–SLA12–50	12	42	97.8	50	22.5	—		M12×1.75P
SK30–SLA16–63	16	48	110.8	63	24	—		M14×2.0P
SK40–SLA6–50	6	25	118.4	50	18	—	63.55	M6×1.0P
SK40–SLA8–50	8	28	118.4	50	18	—		M8×1.25P
SK40–SLA10–50	10	35	118.4	50	20	—		M10×1.5P
SK40–SLA12–50	12	42	118.4	50	22.5	—		M12×1.75P
SK40–SLA16–63	16	48	131.4	63	24	—		M14×2.0P
SK40–SLA20–63	20	52	131.4	63	25	—		M16×2.0P
SK40–SLA25–100	25	65	168.4	100	24	25		M18×2.0P
SK40–SLA32–100	32	72	168.4	100	24	28		M20×2.0P
SK50–SLA6–63	6	25	164.75	63	18	—	97.5	M6×1.0P
SK50–SLA8–63	8	28	164.75	63	18	—		M8×1.25P
SK50–SLA10–63	10	35	164.75	63	20	—		M10×1.5P
SK50–SLA12–63	12	42	164.75	63	22.5	—		M12×1.75P
SK50–SLA16–63	16	48	164.75	63	24	—		M14×2.0P
SK50–SLA20–63	20	52	164.75	63	25	—		M16×2.0P
SK50–SLA25–80	25	65	181.75	80	24	25		M18×2.0P
SK50–SLA32–100	32	72	201.75	100	24	28		M20×2.0P
SK50–SLA40–100	40	90	201.75	100	30	32		M20×2.0P
SK50–SLA42–100	42	90	201.75	100	30	32		M20×2.0P
SK50–SLA50–125	50	100	226.75	125	35	35		M20×2.0P
SK50–SLA63–150	63	125	251.75	150	40	40		M20×2.0P
SK50–SLA63–150	63	125	251.75	150	40	24		M16×2.0P

HSK-MC强力型铣刀夹头
HSK-MC Multi lock milling chuck



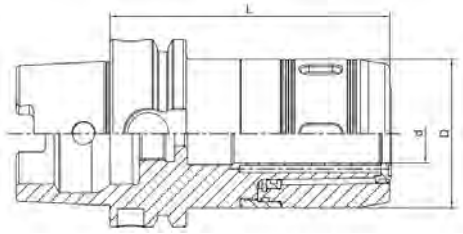

型号 Cat. No	d	D	L	夹持范围 Clamping range
HSK50A-MC20-100	20	55	100	3-16;20
HSK50A-MC25-100	25	59	100	3-20;25
HSK50A-MC32-110	32	68	110	3-25;32
HSK63A-MC16-100	16	45	100	3-12;16
HSK63A-MC20-100	20	55	100	3-16;20
HSK63A-MC25-100	25	59	100	3-20;25
HSK63A-MC32-120	32	68	120	3-25;32
HSK63A-MC32-150	32	68	150	3-25;32
HSK63A-MC32-200	32	68	200	3-25;32
HSK100A-MC20-105	20	55	105	3-16;20
HSK100A-MC25-105	25	59	105	3-20;25
HSK100A-MC32-120	32	73	120	3-25;32
HSK100A-MC42-120	42	88	120	3-32;42
HSK100A-MC20-150	20	55	150	3-16;20
HSK100A-MC25-150	25	59	150	3-20;25
HSK100A-MC32-150	32	73	150	3-25;32
HSK100A-MC42-150	42	88	150	3-32;42
HSK100A-MC20-200	20	55	200	3-16;20
HSK100A-MC25-200	25	59	200	3-20;25
HSK100A-MC32-200	32	73	200	3-25;32
HSK100A-MC42-200	42	88	200	3-32;42

HSK-OZ 铣刀柄
HSK-OZ Mill Chuck


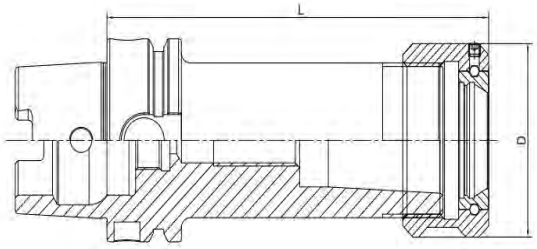

型号 Cat.No	D	L	夹持范围Clamping range
HSK50A-OZ16-90	43	90	2-16
HSK50A-OZ25-110	60	110	2-25
HSK63A-OZ16-100	43	100	2-16
HSK63A-OZ25-100	60	100	2-25
HSK63A-OZ32-120	72	120	3-32
HSK100A-OZ16-110	43	110	2-16
HSK100A-OZ25-120	60	120	2-25
HSK100A-OZ32-130	72	130	3-32

HSK-SK 高速筒夹铣刀柄
HSK-SK High Speed Mill Chuck



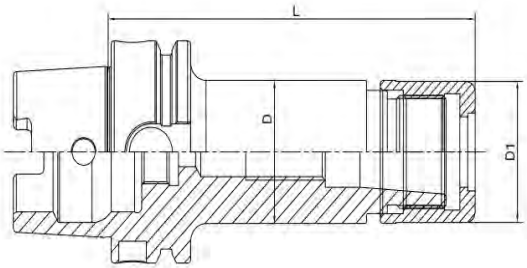

型号 Cat.No	D	D1	L	夹持范围Clamping range	M
HSK63A-SK10-90	27.5	27	90	2-10	M21.5*1
HSK63A-SK16-90	40.6	40	90	3-16	M32*1.5
HSK63A-SK25-90	55.6	55	90	6-25	M45*1.5
HSK100A-SK10-90	27.5	27	90	2-10	M21.5*1
HSK100A-SK16-90	40.6	40	90	3-16	M32*1.5
HSK100A-SK16-90	55.6	55	90	6-25	M45*1.5
HSK63A-SK10-150	27.5	27	150	2-10	M21.5*1
HSK63A-SK16-150	40.6	40	150	3-16	M32*1.5
HSK63A-SK25-150	55.6	55	150	6-25	M45*1.5
HSK100A-SK10-150	27.5	27.1	150	2-10	M21.5*1
HSK100A-SK16-150	40.6	40	150	3-16	M32*1.5
HSK100A-SK25-150	55.6	55	150	6-25	M45*1.5

HSK-DC后拉铣刀柄
HSK-DC Precision Screw Mill Chuck



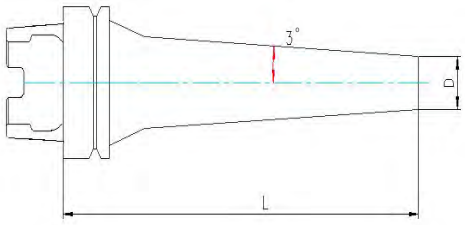

型号 Cat.No	D	L	夹持范围 Clamping range
HSK63A-DC06-90	14	90	1-6
HSK63A-DC06-120	14	120	1-6
HSK63A-DC06-150	14	150	1-6
HSK63A-DC08-90	22	90	1-10
HSK63A-DC08-120	22	120	1-10
HSK63A-DC08-150	22	150	1-10
HSK63A-DC08-200	22	200	1-10
HSK63A-DC12-90	34	90	1-12
HSK63A-DC12-120	34	120	1-12
HSK63A-DC12-150	34	150	1-12
HSK63A-DC12-200	34	200	1-12
HSK100A-DC06-110	14	110	1-6
HSK100A-DC06-150	14	150	1-6
HSK100A-DC08-110	22	110	1-10
HSK100A-DC08-150	22	150	1-10
HSK100A-DC08-200	22	200	1-10
HSK100A-DC12-120	34	120	1-12
HSK100A-DC12-150	34	150	1-12
HSK100A-DC12-200	34	200	1-12

HSK-ER刀柄
HSK-ER Mill Chuck

DIN 69893-A
DIN 6499



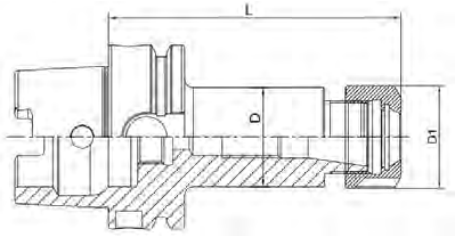

型号 Cat. No	D	D1	L	夹持范围 Clamping range
SK32A-ER16-60	28	28	60	1-10
HSK32A-ER20-60	35	34	60	1-13
HSK32A-ER25-70	42	42	70	2-16
HSK32A-ER32-80	50	50	80	3-20
HSK40A-ER16-70	28	28	70	1-10
HSK40A-ER20-70	35	34	70	1-13
HSK40A-ER25-80	42	42	80	2-16
HSK40A-ER32-80	50	50	80	3-20
HSK50A-ER16-80	28	28	80	1-10
HSK50A-ER20-80	35	34	80	1-13
HSK50A-ER25-80	42	42	80	2-16
HSK50A-ER32-100	50	50	100	3-20
HSK63A-ER16-80	32	32	80	1-10
HSK63A-ER20-80	35	34	80	1-13
HSK63A-ER25-80	42	42	80	2-16
HSK63A-ER32-80	50	50	80	3-20
HSK63A-ER40-80	63	63	90	4-26
HSK63A-ER16-100	32	32	100	1-10
HSK63A-ER20-100	35	34	100	1-13
HSK63A-ER25-100	42	42	100	2-16
HSK63A-ER32-100	50	50	100	3-20
HSK63A-ER40-100	63	63	100	4-26
HSK63A-ER16-160	32	32	160	1-10
HSK63A-ER20-160	35	35	160	1-13
HSK63A-ER25-160	42	42	160	2-16
HSK63A-ER32-160	50	50	160	3-20
HSK63A-ER40-160	63	63	160	4-26
HSK63A-ER16-200	32	32	200	1-10
HSK63A-ER20-200	35	35	200	1-13
HSK63A-ER25-200	42	42	200	2-16
HSK63A-ER32-200	50	50	200	3-20
HSK63A-ER40-200	63	63	200	4-26

扳手須另行購置 The spanner must purchase alone

HSK-ER刀柄
HSK-ER Mill Chuck



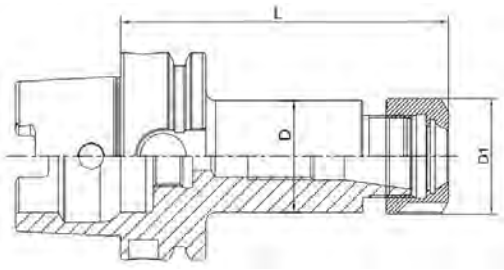

型号Cat.No	D	D1	L1	Clamping
HSK100A-ER16-100	32	32	100	1-10
HSK100A-ER20-100	35	35	100	1-13
HSK100A-ER25-100	42	42	100	2-16
HSK100A-ER32-100	50	50	100	3-20
HSK100A-ER40-120	63	63	120	4-26
HSK100A-ER16-160	32	32	160	1-10
HSK100A-ER20-160	35	35	160	1-13
HSK100A-ER25-160	42	42	160	2-16
HSK100A-ER32-160	50	50	160	3-20
HSK100A-ER40-160	63	63	160	4-26
HSK100A-ER16-200	32	32	200	1-10
HSK100A-ER20-200	35	35	200	1-13
HSK100A-ER25-200	42	42	200	2-16
HSK100A-ER32-200	50	50	200	3-20
HSK100A-ER40-200	63	63	200	4-26

HSK-APU钻头刀柄
HSK-APU Drill Chuck



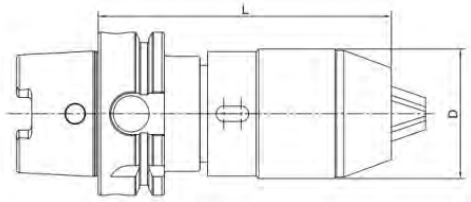

型号Cat.No	D	L		Capacity
HSK50A-APU08-120	38	120	130	1-8
HSK50A-APU13-135	48	135	140	1-13
HSK50A-APU16-140	53	140	145	3-16
HSK63A-APU08-120	38	120	130	1-8
HSK63A-APU13-150	48	150	160	1-13
HSK63A-APU16-155	53	155	165	3-16
HSK100A-APU13-155	48	155	165	1-13
HSK100A-APU16-160	53	160	170	3-16

BT30/BT40/BBT40 高精度液压刀柄
BT30/BT40/BBT40 High precision hydraulic mill chuck



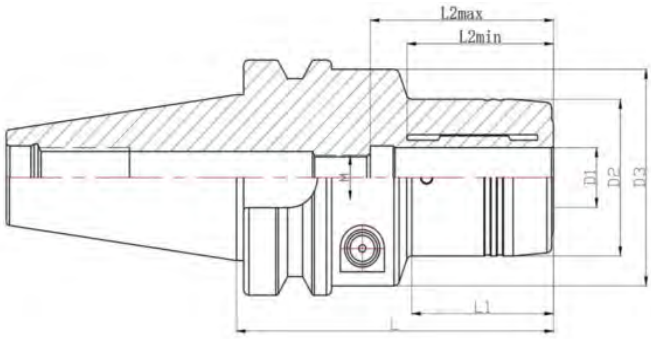

型号 Cat. No	D1	D2	D3	L	L1	L2min	L2max	M
BT30-HDC03-60L	3	21	45	60	29	23	84	-
BT30-HDC04-60L	4	21	45	60	29	23	84	-
BT30-HDC06-75L	6	30	46	75	24	28	50	M5-
BT30-HDC08-75L	8	32	46	75	24	28	50	M6-
BT30-HDC10-75L	10	34	46	75	24	34	50	M8-
BT30-HDC12-75L	12	36	46	75	25	36	50	M8-
BT30-HDC14-90L	14	38	46	90	40	41	52	M8-
BT30-HDC16-90L	16	40	46	90	33	41	52	M8-
BT30-HDC18-90L	18	42	46	90	41	41	52	M8-
BT30-HDC20-90L	20	46	46	90	--	41	52	M8-
BT40-HDC04-90L	4	28	46	90	38	24	42	-
BT40-HDC06-90L	6	30	46	90	38	28	44	M5-
BT40-HDC08-90L	8	32	48	90	38	28	44	M6-
BT40-HDC10-90L	10	36	52	90	40	37	51	M8-
BT40-HDC12-90L	12	38	54	90	40	37	51	M8-
BT40-HDC14-90L	14	40	56	90	40	41	52	M12-
BT40-HDC16-90L	16	42	58	90	40	41	52	M12-
BT40-HDC18-90L	18	43	59	90	40	41	52	M12-
BT40-HDC20-90L	20	46	60	90	40	41	53	M12-
BT40-HDC25-105L	25	52	62	105	55	49	65	M12-
BT40-HDC32-105L	32	63	--	105	--	52	65	M12-
BBT40-HDC04-90L	4	28	46	90	38	24	42	-
BBT40-HDC06-90L	6	30	46	90	38	28	44	M5-
BBT40-HDC08-90L	8	32	48	90	38	28	44	M6-
BBT40-HDC10-90L	10	36	52	90	40	37	51	M8-
BBT40-HDC12-90L	12	38	54	90	40	37	51	M8-
BBT40-HDC14-90L	14	40	56	90	40	41	52	M12-
BBT40-HDC16-90L	16	42	58	90	40	41	52	M12-
BBT40-HDC18-90L	18	43	59	90	40	41	52	M12-
BBT40-HDC20-90L	20	46	60	90	40	41	53	M12-
BBT40-HDC25-90L	25	52	62	105	55	49	65	M12-
BBT40-HDC32-105L	32	63	--	105	--	52	65	M12-

BT40 细长型高精度液压刀柄
BT40 Slender High precision hydraulic mill chuck

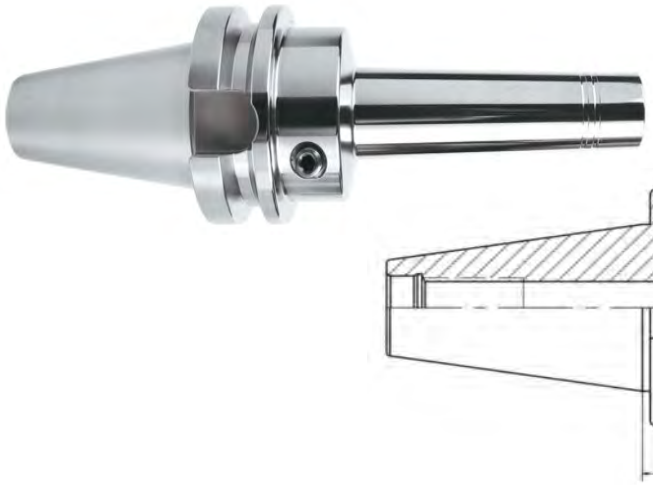

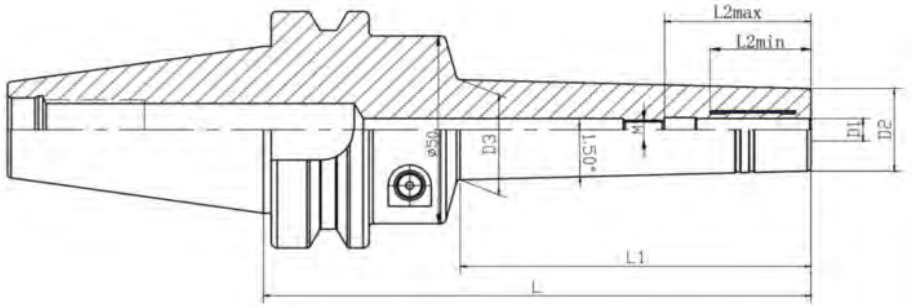

型号 Cat. No	D1	D2	D3	L	L1	L2min	L2max	M
BT40-HDC06-140S	6	22	26.5	140	90	25	37	M5-
BT40-HDC08-140S	8	24	28.7	140	90	25	37	M6-
BT40-HDC10-140S	10	25	29.7	140	90	31	42.5	M8-
BT40-HDC12-140S	12	28	32.7	140	90.5	34	47.5	M8-
BT40-HDC20-140S	20	40	44.7	140	91	39	53	M12

数控磨刀机专用夹具
CNC Grinding tool fixture



Use model

Anka: FX5 (with hydraulic cylinder) FX7 FG (with air cylinder) GX7 MX7 MX5 TX7+

Walter: POWER series BASICMINI POWER ESSENTIAL

Support most domestic five-axis tool sharpening fixtures

Features: Spacer design to avoid wear on the collet, extend the life of the collet, enhance the clamping force, and can be used to clamp bars with larger diameters without disassembling the claws

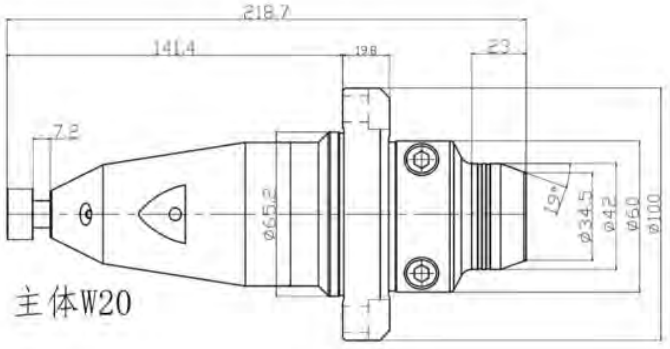

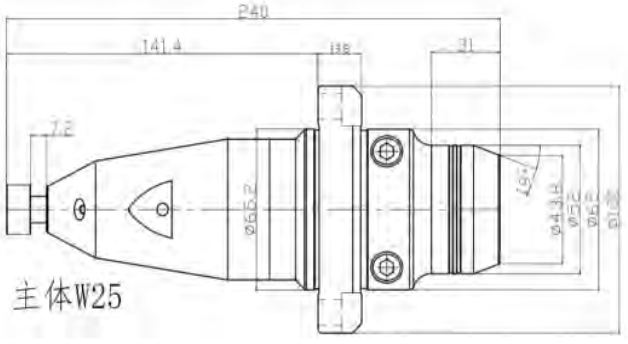

BT50/BBT50 高精度液压刀柄
BT50/BBT50 High precision hydraulic mill chuck



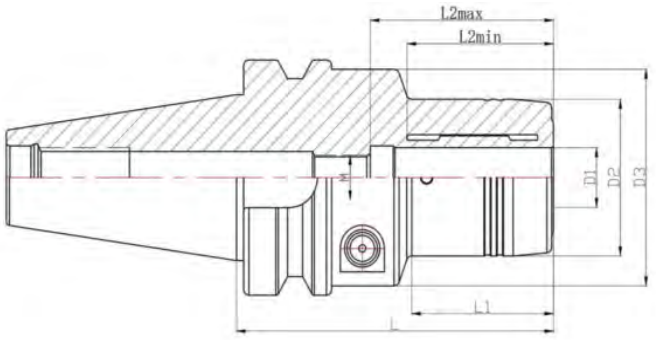

型号 Cat. No	D1	D2	D3	L	L1	L2min	L2max	M
BT50-HDC06-105L	6	30	46	105	38	28	44	M5-
BT50-HDC08-105L	8	32	48	105	38	28	44	M6-
BT50-HDC10-105L	10	36	52	105	40	37	51	M8-
BT50-HDC12-105L	12	38	54	105	40	37	51	M8-
BT50-HDC14-105L	14	40	56	105	40	41	52	M12-
BT50-HDC16-105L	16	42	58	105	40	41	52	M12-
BT50-HDC18-105L	18	43	59	105	39	40	51	M12-
BT50-HDC20-105L	20	46	60	105	40	41	53	M12-
BT50-HDC25-120L	25	52	62	120	55	49	65	M12-
BT50-HDC32-120L	32	63	72	120	56	52	65	M12-
BBT type								
BBT50-HDC06-105L	6	30	46	105	38	28	44	M5-
BBT50-HDC08-105L	8	32	48	105	38	28	44	M6-
BBT50-HDC10-105L	10	36	52	105	40	37	51	M8-
BBT50-HDC12-105L	12	38	54	105	40	37	51	M8-
BBT50-HDC14-105L	14	40	56	105	40	41	52	M12-
BBT50-HDC16-105L	16	42	58	105	40	41	52	M12-
BBT50-HDC18-105L	18	43	59	105	39	40	51	M12-
BBT50-HDC20-105L	20	46	60	105	40	41	53	M12-
BBT50-HDC25-120L	25	52	62	120	55	49	65	M12-
BBT50-HDC32-120L	32	63	72	120	56	52	65	M12-
Extended type								
BT50-HDC06-150L	6	30	46	150	38	28	44	M5-
BT50-HDC08-150L	8	32	48	150	38	28	44	M6-
BT50-HDC10-150L	10	36	52	150	40	37	51	M8-
BT50-HDC12-150L	12	38	54	150	40	37	51	M8-
BT50-HDC14-150L	14	40	56	150	40	41	52	M12-
BT50-HDC16-150L	16	42	58	150	40	41	52	M12-
BT50-HDC18-150L	18	43	59	150	39	40	51	M12-
BT50-HDC20-150L	20	46	60	150	40	41	53	M12-
BT50-HDC25-150L	25	52	62	150	55	49	65	M12-
BT50-HDC32-150L	32	63	72	150	56	52	65	M12-

HSK40E/HSK50E 高精度液压刀柄
HSK40E/HSK50E High precision hydraulic mill chuck



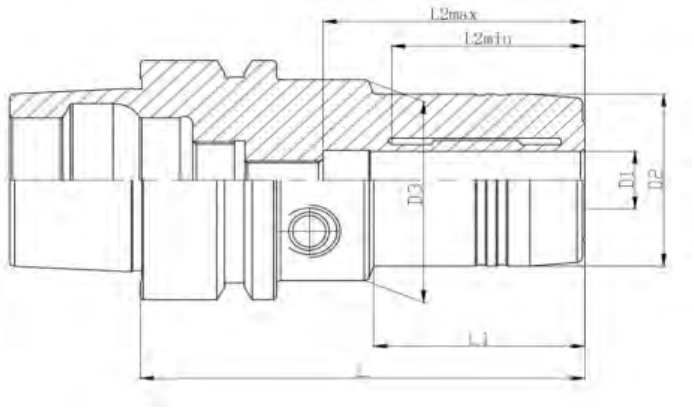

型号 Cat. No	D1	D2	D3	L	L1	L2min	L2max	M
HSK40E-HDC06-70L	6	30	42	70	25.5	26	38	M5-
HSK40E-HDC08-70L	8	32	42	70	26	28	38	M6-
HSK40E-HDC10-75L	10	34	42	75	32.6	34	45	M8-
HSK40E-HDC12-80L	12	36	42	80	40	36	50	M8-
HSK50E-HDC06-70L	6	30	42	70	25.5	26	38	M5-
HSK50E-HDC08-70L	8	32	42	70	26	28	38	M6-
HSK50E-HDC10-80L	10	34	42	80	32.6	34	45	M8-
HSK50E-HDC12-85L	12	36	42	85	40	36	50	M8-
HSK50E-HDC16-90L	16	40	42	90	43	41	52	M8-
HSK50E-HDC20-90L	20	42	42	90	64	41	52	M8-

HSK50A 高精度液压刀柄
HSK50A High precision hydraulic mill chuck



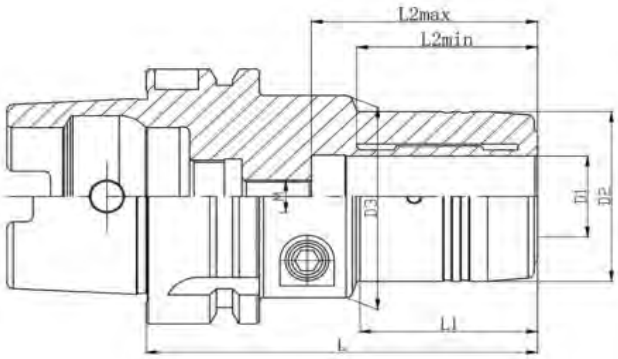

型号Cat No	D1	D2	D3	L	L1	L2min	L2max	M
HSK50A-HDC06-70L	6	30	42	70	25.5	26	38	M5-
HSK50A-HDC08-70L	8	32	42	70	26	28	38	M6-
HSK50A-HDC10-80L	10	34	42	80	32.6	34	45	M8-
HSK50A-HDC12-85L	12	36	42	85	40	36	50	M8-
HSK50A-HDC16-90L	16	40	42	90	43	41	52	M8-
HSK50A-HDC20-90L	20	42	42	90	64	41	52	M8-

HSK63A 高精度液压刀柄
HSK63A High precision hydraulic mill chuck



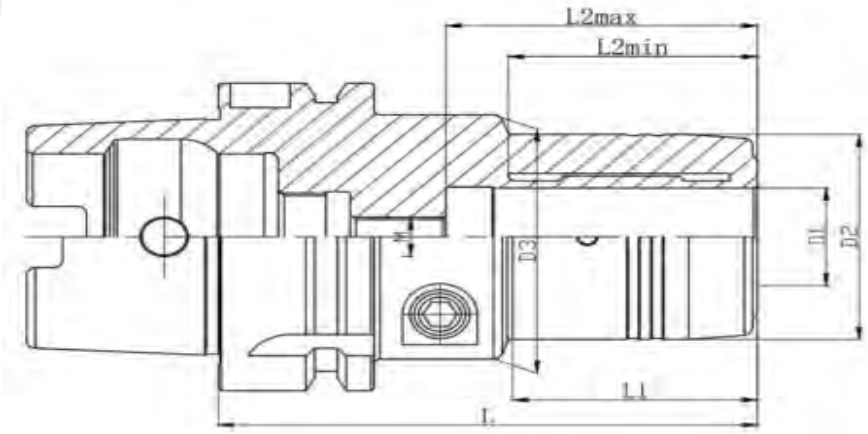

型号 Cat. No	D1	D2	D3	L	L1	L2min	L2max	M
HSK63A-HDC06-80L	6	32	48	80	32	29	46	M5-
HSK63A-HDC06-125L	6	32	48	125	38.5	28	44.5	M5-
HSK63A-HDC08-80L	8	34	50	80	32	29	46	M6-
HSK63A-HDC08-125L	8	32	48	125	38.5	28	44.5	M6-
HSK63A-HDC10-80L	10	36	50	80	32	31	50	M8-
HSK63A-HDC10-125L	10	36	50	125	40	37	51	M8-
HSK63A-HDC12-80L	12	38	50	80	32	32	50	M8-
HSK63A-HDC12-125L	12	38	50	125	41	37	51	M8-
HSK63A-HDC14-80L	14	40	50	80	40	38	50	M8-
HSK63A-HDC16-90L	16	42	50	90	41	40	51	M8-
HSK63A-HDC16-125L	16	42	50	125	43	40	52	M8-
HSK63A-HDC18-90L	18	42	50	90	41	40	51	M8-
HSK63A-HDC20-90L	20	42	50	90	41	40	52.5	M8-
HSK63A-HDC20-120L	20	44	50	125	41	40	52.5	M8-
HSK63A-HDC20-175L	20	42	50	175	41	40	52.5	M8-
HSK63A-HDC20-200L	20	42	50	200	45	40	52.5	M8-
HSK63A-HDC25-110L	25	53	63	110	55.5	45	61	M8-
HSK63A-HDC32-110L	32	63	63	110	--	55	65	M8-

HSK100A 高精度液压刀柄
HSK100A High precision hydraulic mill chuck



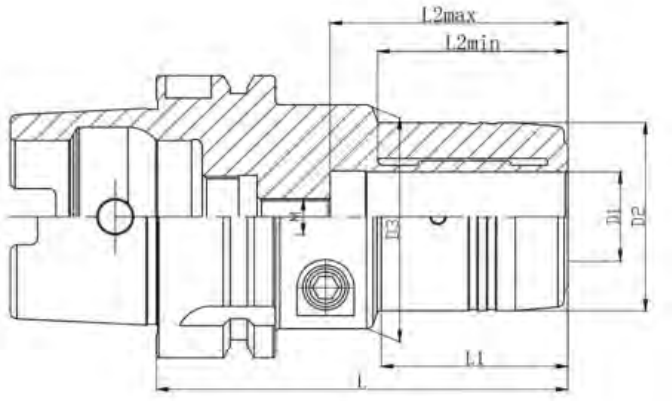

型号 Cat. No	D1	D2	D3	L	L1	L2min	L2max	M
HSK100A-HDC06-90L	6	30	48	90	31	28	44.5	M5-
HSK100A-HDC08-90L	8	32	48	90	31	28	44.5	M6-
HSK100A-HDC10-105L	10	36	50	105	38	37	51	M8-
HSK100A-HDC12-105L	12	38	52	105	40	37	51	M8-
HSK100A-HDC14-105L	14	38	52	105	41	41	51	M8-
HSK100A-HDC16-105L	16	41	54	105	42	41	52	M12-
HSK100A-HDC18-105L	18	42	50	105	41	41	52	M12-
HSK100A-HDC20-105L	20	43	54	105	41	41	53	M12-
HSK100A-HDC25-110L	25	52	62	110	55	49	65	M12-
HSK100A-HDC32-110L	32	63	72	110	57	52	65	M12-

SK50 高精度液压刀柄
SK50 High precision hydraulic mill chuck



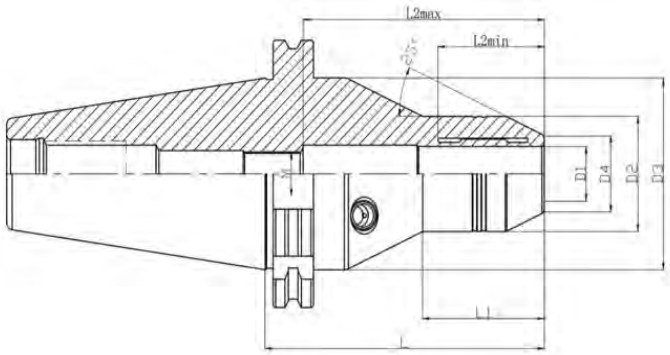

型号Cat No	D1	D2	D3	D4	L	L1	L2min	L2max	M
SK50-HDC12M-110L	12	36.5	60	21.5	110	55	34	50	M8
SK50-HDC14M-110L	14	38	60	23.5	110	60	34	50	M8
SK50-HDC16M-110L	16	39.5	60	25.5	110	60	38	53	M8
SK50-HDC18M-110L	18	41	60	27.5	110	60	38	53	M16
SK50-HDC20M-110L	20	42	70	28	110	47	41	95	M16

SK50 高精度液压刀柄
SK50 High precision hydraulic mill chuck



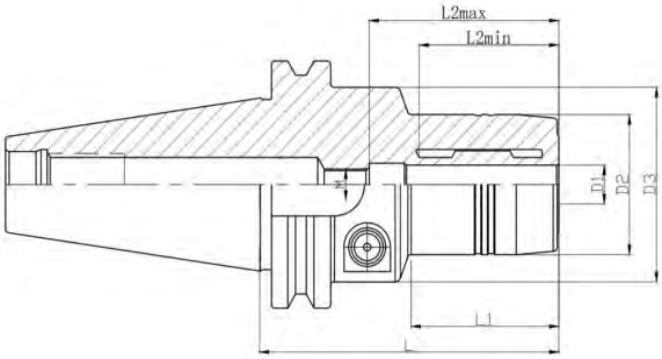

型号 Cat. No	D1	D2	D3	L	L1	L2min	L2max	M
SK50-HDC06-90L	6	30	50	90	38.5	28	44	M5-
SK50-HDC08-90L	8	32	50	90	38.5	28	44	M6-
SK50-HDC10-90L	10	36	50	90	40.5	37	51	M8-
SK50-HDC12-90L	12	38	50	90	40.5	37	51	M8-
SK50-HDC14-90L	14	40	50	90	40.5	41	52	M12-
SK50-HDC16-90L	16	42	50	90	40.5	41	52	M12-
SK50-HDC20-90L	20	4	50	90	40.8	41	53	M12-
SK50-HDC25-110L	25	52	57	110	60	49	65	M8-
SK50-HDC32-110L	32	63	63	110	91	52	65	M8-

SK40 高精度液压刀柄
SK40 High precision hydraulic mill chuck



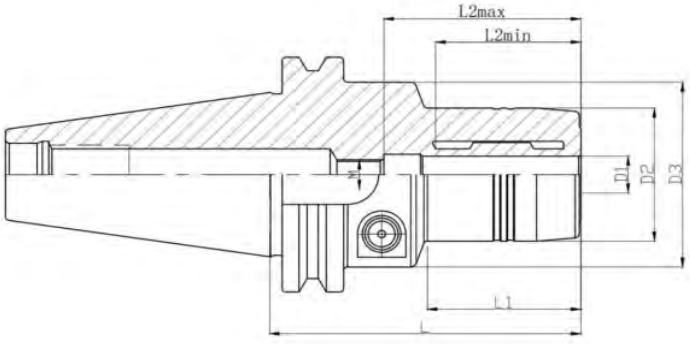

型号 Cat. No	D1	D2	D3	L	L1	L2min	L2max	M
SK40-HDC06-80.5L	6	30	50	80.5	38	28	44	M5-
SK40-HDC08-80.5L	8	32	50	80.5	38	28	44	M6-
SK40-HDC10-80.5L	10	36	50	80.5	40	37	51	M8-
SK40-HDC12-80.5L	12	38	50	80.5	40	37	51	M8-
SK40-HDC16-80.5L	16	42	50	80.5	41	41	52	M12-
SK40-HDC20-80.5L	20	42	50	80.5	41	41	53	M12-

BT热缩刀柄标准型
BT Shrink fit chuck 4.5°



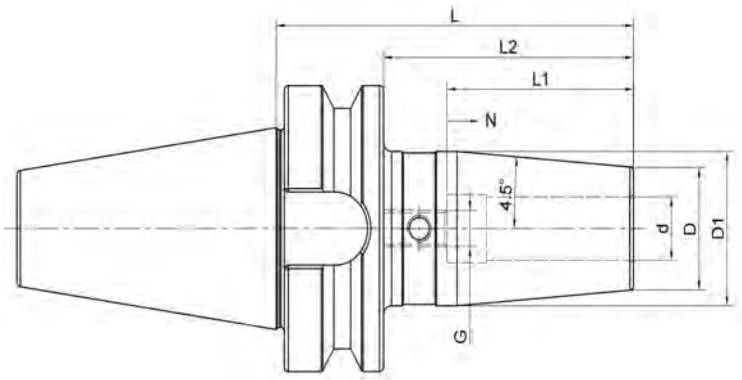

型号Cat No	d	D	D1	L	L2	L1	N	G
BT30-SF03-80	3	15	20	80	58	.	.	.
BT30-SF04-80	4	15	20	80	58	.	.	.
BT30-SF05-80	5	15	20	80	58	.	.	.
BT30-SF06-80	6	21	27	80	58	36	10	M5
BT30-SF08-80	8	21	27	80	58	36	10	M6
BT30-SF10-80	10	24	32	80	58	42	10	M8x1
BT30-SF12-80	12	24	32	80	58	47	10	M10x1
BT30-SF14-80	14	27	34	80	58	47	10	M10x1
BT30-SF16-80	16	27	34	80	58	50	10	M12x1
BT30-SF18-80	18	33	42	80	58	50	10	M12x1
BT30-SF20-80	20	33	42	80	58	52	10	M16x1
BT40-SF03-80	3	15	20	80	53	.	.	.
BT40-SF04-80	4	15	20	80	53	.	.	.
BT40-SF05-80	5	15	20	80	53	.	.	.
BT40-SF06-90	6	21	27	90	63	36	10	M5
BT40-SF08-90	8	21	27	90	63	36	10	M6
BT40-SF10-90	10	24	32	90	63	42	10	M8x1
BT40-SF12-90	12	24	32	90	63	47	10	M10x1
BT40-SF14-90	14	27	34	90	63	47	10	M10x1
BT40-SF16-90	16	27	34	90	63	50	10	M12x1
BT40-SF18-90	18	33	42	90	63	50	10	M12x1
BT40-SF20-90	20	33	42	90	63	52	10	M16x1
BT40-SF25-100	25	44	53	100	73	58	10	M16x1
BT40-SF32-100	32	44	53	100	73	62	10	M16x1

型号Cat No	d	D	D1	L	L2	L1	N	G
BT40-SF06-120	6	21	27	120	93	36	10	M5
BT40-SF08-120	8	21	27	120	93	36	10	M6
BT40-SF10-120	10	24	32	120	93	42	10	M8x1
BT40-SF12-120	12	24	32	120	93	47	10	M10x1
BT40-SF14-120	14	27	34	120	93	47	10	M10x1
BT40-SF16-120	16	27	34	120	93	50	10	M12x1
BT40-SF18-120	18	33	42	120	93	50	10	M12x1
BT40-SF20-120	20	33	42	120	93	52	10	M16x1
BT40-SF25-120	25	44	53	120	93	58	10	M16x1
BT40-SF32-120	32	44	53	120	93	62	10	M16x1
BT40-SF06-160	6	21	32	160	133	36	10	M5
BT40-SF08-160	8	21	32	160	133	36	10	M6
BT40-SF10-160	10	24	34	160	133	42	10	M8x1
BT40-SF12-160	12	24	34	160	133	47	10	M10x1
BT40-SF14-160	14	27	42	160	133	47	10	M10x1
BT40-SF16-160	16	27	42	160	133	50	10	M12x1
BT40-SF18-160	18	33	50	160	133	50	10	M12x1
BT40-SF20-160	20	33	50	160	133	52	10	M16x1
BT40-SF25-160	25	44	53	160	133	58	10	M16x1
BT40-SF32-160	32	44	53	160	133	62	10	M16x1
BT40-SF06-200	6	21	32	200	173	36	10	M5
BT40-SF08-200	8	21	32	200	173	36	10	M6
BT40-SF10-200	10	24	34	200	173	42	10	M8x1
BT40-SF12-200	12	24	34	200	173	47	10	M10x1
BT40-SF14-200	14	27	42	200	173	47	10	M10x1
BT40-SF16-200	16	27	42	200	173	50	10	M12x1
BT40-SF18-200	18	33	50	200	173	50	10	M12x1
BT40-SF20-200	20	33	50	200	173	52	10	M16x1
BT40-SF25-200	25	44	53	200	173	58	10	M16x1
BT40-SF32-200	32	44	53	200	173	62	10	M16x1

型号Cat No	d	D	D1	L	L2	L1	N	G
BT50-SF04-100	4	15	20	100	62	.	.	.
BT50-SF05-100	5	15	20	100	62	.	.	.
BT50-SF06-100	6	21	27	100	62	36	10	M5
BT50-SF08-100	8	21	27	100	62	36	10	M6
BT50-SF10-100	10	24	32	100	62	42	10	M8x1
BT50-SF12-100	12	24	32	100	62	47	10	M10x1
BT50-SF14-100	14	27	34	100	62	47	10	M10x1
BT50-SF16-100	16	27	34	100	62	50	10	M12x1
BT50-SF18-100	18	33	42	100	62	50	10	M12x1
BT50-SF20-100	20	33	42	100	62	52	10	M16x1
BT50-SF25-110	25	44	53	110	72	58	10	M16x1
BT50-SF32-110	32	44	53	110	72	62	10	M16x1
BT50-SF06-120	6	21	27	120	82	36	10	M5
BT50-SF08-120	8	21	27	120	82	36	10	M6
BT50-SF10-120	10	24	32	120	82	42	10	M8x1
BT50-SF12-120	12	24	32	120	82	47	10	M10x1
BT50-SF14-120	14	27	34	120	82	47	10	M10x1
BT50-SF16-120	16	27	34	120	82	50	10	M12x1
BT50-SF18-120	18	33	42	120	82	50	10	M12x1
BT50-SF20-120	20	33	42	120	82	52	10	M16x1
BT50-SF25-120	25	44	53	120	82	58	10	M16x1
BT50-SF32-120	32	44	53	120	82	62	10	M16x1
BT50-SF06-160	6	21	32	160	122	36	10	M5
BT50-SF08-160	8	21	32	160	122	36	10	M6
BT50-SF10-160	10	24	34	160	122	42	10	M8x1
BT50-SF12-160	12	24	34	160	122	47	10	M10x1
BT50-SF14-160	14	27	42	160	122	47	10	M10x1
BT50-SF16-160	16	27	42	160	122	50	10	M12x1
BT50-SF18-160	18	33	50	160	122	50	10	M12x1
BT50-SF20-160	20	33	50	160	122	52	10	M16x1
BT50-SF25-160	25	44	60	160	122	58	10	M16x1
BT50-SF32-160	32	44	60	160	122	62	10	M16x1
BT50-SF06-200	6	21	32	200	162	36	10	M5
BT50-SF08-200	8	21	32	200	162	36	10	M6
BT50-SF10-200	10	24	34	200	162	42	10	M8x1
BT50-SF12-200	12	24	34	200	162	47	10	M10x1
BT50-SF14-200	14	27	42	200	162	47	10	M10x1
BT50-SF16-200	16	27	42	200	162	50	10	M12x1
BT50-SF18-200	18	33	50	200	162	50	10	M12x1
BT50-SF20-200	20	33	50	200	162	52	10	M16x1
BT50-SF25-200	25	44	60	200	162	58	10	M16x1
SK30-SF03-80	3	15	20	80	60.9	.	.	.
SK30-SF04-80	4	15	20	80	60.9	.	.	.
SK30-SF05-80	5	15	20	80	60.9	.	.	.
SK30-SF06-80	6	21	27	80	60.9	36	10	M5
SK30-SF08-80	8	21	27	80	60.9	36	10	M6
SK30-SF10-80	10	24	32	80	60.9	42	10	M8x1
SK30-SF12-80	12	24	32	80	60.9	47	10	M10x1
SK30-SF14-80	14	27	34	80	60.9	47	10	M10x1
SK30-SF16-80	16	27	34	80	60.9	50	10	M12x1
SK30-SF18-80	18	33	42	80	60.9	50	10	M12x1
SK30-SF20-80	20	33	42	80	60.9	52	10	M16x1
SK30-SF04-120	4	15	20	120	100.9	.	.	.
SK30-SF05-120	5	15	20	120	100.9	.	.	.
SK30-SF06-120	6	21	27	120	100.9	36	10	M5
SK30-SF08-120	8	21	27	120	100.9	36	10	M6
SK30-SF10-120	10	24	32	120	100.9	42	10	M8x1
SK30-SF12-120	12	24	32	120	100.9	47	10	M10x1
SK30-SF16-120	16	27	34	120	100.9	50	10	M12x1
SK40-SF03-80	3	15	20	80	60.9	.	.	.
SK40-SF04-80	4	15	20	80	60.9	.	.	.
SK40-SF05-80	5	15	20	80	60.9	.	.	.
SK40-SF06-80	6	21	27	80	60.9	36	10	M5
SK40-SF08-80	8	21	27	80	60.9	36	10	M6
SK40-SF10-80	10	24	32	80	60.9	42	10	M8x1
SK40-SF12-80	12	24	32	80	60.9	47	10	M10x1
SK40-SF14-80	14	27	34	80	60.9	47	10	M10x1
SK40-SF16-80	16	27	34	80	60.9	50	10	M12x1
SK40-SF18-80	18	33	42	80	60.9	50	10	M12x1
SK40-SF20-80	20	33	42	80	60.9	52	10	M16x1
SK40-SF25-100	25	44	50	100	80.9	58	10	M16x1
SK40-SF32-100	32	44	50	100	80.9	62	10	M16x1

SK热缩刀柄标准型
SK Shrink fit chuck 4.5°



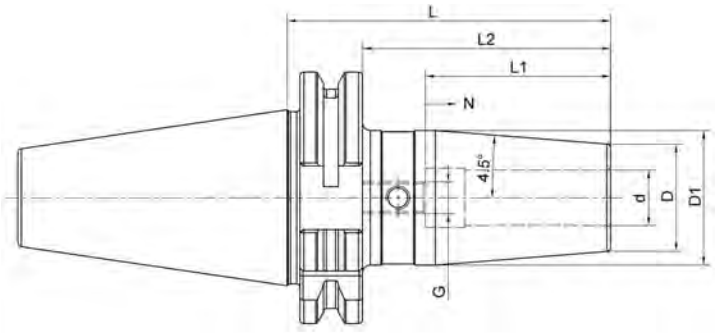

Cat No	d	D	D1	L	L2	L1	N	G
SK40-SF06-120	6	21	27	120	100.9	36	10	M5
SK40-SF08-120	8	21	27	120	100.9	36	10	M6
SK40-SF10-120	10	24	32	120	100.9	42	10	M8x1
SK40-SF12-120	12	24	32	120	100.9	47	10	M10x1
SK40-SF14-120	14	27	34	120	100.9	47	10	M10x1
SK40-SF16-120	16	27	34	120	100.9	50	10	M12x1
SK40-SF18-120	18	33	42	120	100.9	50	10	M12x1
SK40-SF20-120	20	33	42	120	100.9	52	10	M16x1
SK40-SF25-120	25	44	50	120	100.9	58	10	M16x1
SK40-SF06-160	6	21	32	160	140.9	36	10	M5
SK40-SF08-160	8	21	32	160	140.9	36	10	M6
SK40-SF10-160	10	24	34	160	140.9	42	10	M8x1
SK40-SF12-160	12	24	34	160	140.9	47	10	M10x1
SK40-SF14-160	14	27	42	160	140.9	47	10	M10x1
SK40-SF16-160	16	27	42	160	140.9	50	10	M12x1
SK40-SF18-160	18	33	50	160	140.9	50	10	M12x1
SK40-SF20-160	20	33	50	160	140.9	52	10	M16x1
SK40-SF25-160	25	44	50	160	140.9	58	10	M16x1
SK40-SF32-160	32	44	50	160	140.9	62	10	M16x1
SK40-SF06-200	6	21	32	200	180.9	36	10	M5
SK40-SF08-200	8	21	32	200	180.9	36	10	M6
SK40-SF10-200	10	24	34	200	180.9	42	10	M8x1
SK40-SF12-200	12	24	34	200	180.9	47	10	M10x1
SK40-SF14-200	14	27	42	200	180.9	47	10	M10x1
SK40-SF16-200	16	27	42	200	180.9	50	10	M12x1
SK40-SF18-200	18	33	50	200	180.9	50	10	M12x1
SK40-SF20-200	20	33	50	200	180.9	52	10	M16x1
SK40-SF25-200	25	44	50	200	180.9	58	10	M16x1
SK40-SF32-200	32	44	50	200	180.9	62	10	M16x1

Cat No	d	D	D1	L	L2	L1	N	G
SK50-SF06-80	6	21	27	80	60.9	36	10	M5
SK50-SF08-80	8	21	27	80	60.9	36	10	M6
SK50-SF10-80	10	24	32	80	60.9	42	10	M8x1
SK50-SF12-80	12	24	32	80	60.9	47	10	M10x1
SK50-SF14-80	14	27	34	80	60.9	47	10	M10x1
SK50-SF16-80	16	27	34	80	60.9	50	10	M12x1
SK50-SF18-80	18	33	42	80	60.9	50	10	M12x1
SK50-SF20-80	20	33	42	80	60.9	52	10	M16x1
SK50-SF25-100	25	44	53	100	80.9	58	10	M16x1
SK50-SF32-100	32	44	53	100	80.9	62	10	M16x1
SK50-SF06-120	6	21	27	120	100.9	36	10	M5
SK50-SF08-120	8	21	27	120	100.9	36	10	M6
SK50-SF10-120	10	24	32	120	100.9	42	10	M8x1
SK50-SF12-120	12	24	32	120	100.9	47	10	M10x1
SK50-SF14-120	14	27	34	120	100.9	47	10	M10x1
SK50-SF16-120	16	27	34	120	100.9	50	10	M12x1
SK50-SF18-120	18	33	42	120	100.9	50	10	M12x1
SK50-SF20-120	20	33	42	120	100.9	52	10	M16x1
SK50-SF25-120	25	44	53	120	100.9	58	10	M16x1
SK50-SF32-120	32	44	53	120	100.9	62	10	M16x1

Cat No	d	D	D1	L	L2	L1	N	G
SK50-SF06-160	6	21	32	160	140.9	36	10	M5
SK50-SF08-160	8	21	32	160	140.9	36	10	M6
SK50-SF10-160	10	24	34	160	140.9	42	10	M8x1
SK50-SF12-160	12	24	34	160	140.9	47	10	M10x1
SK50-SF14-160	14	27	42	160	140.9	47	10	M10x1
SK50-SF16-160	16	27	42	160	140.9	50	10	M12x1
SK50-SF18-160	18	33	50	160	140.9	50	10	M12x1
SK50-SF20-160	20	33	50	160	140.9	52	10	M16x1
SK50-SF25-160	25	44	60	160	140.9	58	10	M16x1
SK50-SF32-160	32	44	60	160	140.9	62	10	M16x1
SK50-SF06-200	6	21	32	200	180.9	36	10	M5
SK50-SF08-200	8	21	32	200	180.9	36	10	M6
SK50-SF10-200	10	24	34	200	180.9	42	10	M8x1
SK50-SF12-200	12	24	34	200	180.9	47	10	M10x1
SK50-SF14-200	14	27	42	200	180.9	47	10	M10x1
SK50-SF16-200	16	27	42	200	180.9	50	10	M12x1
SK50-SF18-200	18	33	50	200	180.9	50	10	M12x1
SK50-SF20-200	20	33	50	200	180.9	52	10	M16x1
SK50-SF25-200	25	44	60	200	180.9	58	10	M16x1
SK50-SF32-200	32	44	60	200	180.9	62	10	M16x1

CAT热缩刀柄标准型
CAT Shrink fit chuck 4.5°



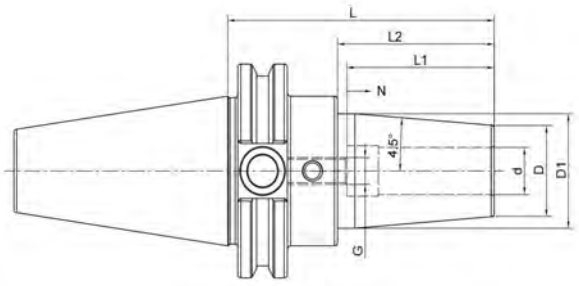

Cat No	d	D	D1	L	L2	L1	N	G
CAT40-SF04-80	4	15	20	80	60.9			
CAT40-SF05-80	5	15	20	80	60.9			
CAT40-SF06-80	6	21	27	80	60.9	36	10	M5
CAT40-SF08-80	8	21	27	80	60.9	36	10	M6
CAT40-SF10-80	10	24	32	80	60.9	42	10	M8x1
CAT40-SF12-80	12	24	32	80	60.9	47	10	M10x1
CAT40-SF14-80	14	27	34	80	60.9	47	10	M10x1
CAT40-SF16-80	16	27	34	80	60.9	50	10	M12x1
CAT40-SF18-80	18	33	42	80	60.9	50	10	M12x1
CAT40-SF20-80	20	33	42	80	60.9	52	10	M16x1
CAT40-SF25-100	25	44	50	100	80.9	58	10	M16x1
CAT40-SF32-100	32	44	50	100	80.9	62	10	M16x1
CAT40-SF06-120	6	21	27	120	100.9	36	10	M5
CAT40-SF08-120	8	21	27	120	100.9	36	10	M6
CAT40-SF10-120	10	24	32	120	100.9	42	10	M8x1
CAT40-SF12-120	12	24	32	120	100.9	47	10	M10x1
CAT40-SF14-120	14	27	34	120	100.9	47	10	M10x1
CAT40-SF16-120	16	27	34	120	100.9	50	10	M12x1
CAT40-SF18-120	18	33	42	120	100.9	50	10	M12x1
CAT40-SF20-120	20	33	42	120	100.9	52	10	M16x1
CAT40-SF25-120	25	44	50	120	100.9	58	10	M16x1
CAT40-SF06-160	6	21	32	160	140.9	36	10	M5
CAT40-SF08-160	8	21	32	160	140.9	36	10	M6
CAT40-SF10-160	10	24	34	160	140.9	42	10	M8x1
CAT40-SF12-160	12	24	34	160	140.9	47	10	M10x1
CAT40-SF14-160	14	27	42	160	140.9	47	10	M10x1
CAT40-SF16-160	16	27	42	160	140.9	50	10	M12x1
CAT40-SF18-160	18	33	50	160	140.9	50	10	M12x1
CAT40-SF20-160	20	33	50	160	140.9	52	10	M16x1
CAT40-SF25-160	25	44	50	160	140.9	58	10	M16x1
CAT40-SF32-160	32	44	50	160	140.9	62	10	M16x1

Cat No	d	D	D1	L	L2	L1	N	G
CAT40-SF06-200	6	21	32	200	180.9	36	10	M5
CAT40-SF08-200	8	21	32	200	180.9	36	10	M6
CAT40-SF10-200	10	24	34	200	180.9	42	10	M8x1
CAT40-SF12-200	12	24	34	200	180.9	47	10	M10x1
CAT40-SF14-200	14	27	42	200	180.9	47	10	M10x1
CAT40-SF16-200	16	27	42	200	180.9	50	10	M12x1
CAT40-SF18-200	18	33	50	200	180.9	50	10	M12x1
CAT40-SF20-200	20	33	50	200	180.9	52	10	M16x1
CAT40-SF25-200	25	44	50	200	180.9	58	10	M16x1
CAT40-SF32-200	32	44	50	200	180.9	62	10	M16x1
CAT50-SF06-80	6	21	27	80	60.9	36	10	M5
CAT50-SF08-80	8	21	27	80	60.9	36	10	M6
CAT50-SF10-80	10	24	32	80	60.9	42	10	M8x1
CAT50-SF12-80	12	24	32	80	60.9	47	10	M10x1
CAT50-SF14-80	14	27	34	80	60.9	47	10	M10x1
CAT50-SF16-80	16	27	34	80	60.9	50	10	M12x1
CAT50-SF18-80	18	33	42	80	60.9	50	10	M12x1
CAT50-SF20-80	20	33	42	80	60.9	52	10	M16x1
CAT50-SF25-100	25	44	53	100	80.9	58	10	M16x1
CAT50-SF32-100	32	44	53	100	80.9	62	10	M16x1
CAT50-SF06-120	6	21	27	120	100.9	36	10	M5
CAT50-SF08-120	8	21	27	120	100.9	36	10	M6
CAT50-SF10-120	10	24	32	120	100.9	42	10	M8x1
CAT50-SF12-120	12	24	32	120	100.9	47	10	M10x1
CAT50-SF14-120	14	27	34	120	100.9	47	10	M10x1
CAT50-SF16-120	16	27	34	120	100.9	50	10	M12x1
CAT50-SF18-120	18	33	42	120	100.9	50	10	M12x1
CAT50-SF20-120	20	33	42	120	100.9	52	10	M16x1
CAT50-SF25-120	25	44	53	120	100.9	58	10	M16x1
CAT50-SF32-120	32	44	53	120	100.9	62	10	M16x1

Cat No	d	D	D1	L	L2	L1	N	G
CAT50-SF06-160	6	21	32	160	140.9	36	10	M5
CAT50-SF08-160	8	21	32	160	140.9	36	10	M6
CAT50-SF10-160	10	24	34	160	140.9	42	10	M8x1
CAT50-SF12-160	12	24	34	160	140.9	47	10	M10x1
CAT50-SF14-160	14	27	42	160	140.9	47	10	M10x1
CAT50-SF16-160	16	27	42	160	140.9	50	10	M12x1
CAT50-SF18-160	18	33	50	160	140.9	50	10	M12x1
CAT50-SF20-160	20	33	50	160	140.9	52	10	M16x1
CAT50-SF25-160	25	44	60	160	140.9	58	10	M16x1
CAT50-SF32-160	32	44	60	160	140.9	62	10	M16x1
CAT50-SF06-200	6	21	32	200	180.9	36	10	M5
CAT50-SF08-200	8	21	32	200	180.9	36	10	M6
CAT50-SF10-200	10	24	34	200	180.9	42	10	M8x1
CAT50-SF12-200	12	24	34	200	180.9	47	10	M10x1
CAT50-SF14-200	14	27	42	200	180.9	47	10	M10x1
CAT50-SF16-200	16	27	42	200	180.9	50	10	M12x1
CAT50-SF18-200	18	33	50	200	180.9	50	10	M12x1
CAT50-SF20-200	20	33	50	200	180.9	52	10	M16x1
CAT50-SF25-200	25	44	60	200	180.9	58	10	M16x1
CAT50-SF32-200	32	44	60	200	180.9	62	10	M16x1

HSK-A热缩刀柄标准型
HSK-A Shrink fit chuck 4.5°



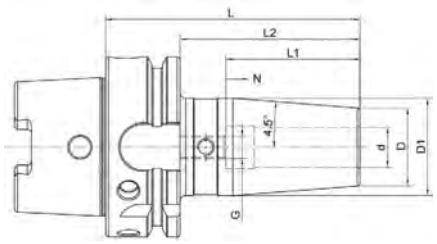

Cat No	d	D	D1	L	L2	L1	N	G
HSK32A-SF03-65	3	15	20	65	45	-	-	-
HSK32A-SF04-65	4	15	20	65	45	-	-	-
HSK32A-SF05-65	5	15	20	65	45	-	-	-
HSK32A-SF06-75	6	21	26	75	55	36	10	M5
HSK32A-SF08-75	8	21	26	75	55	36	10	M6
HSK32A-SF10-75	10	24	29	75	55	42	10	M8x1
HSK32A-SF12-80	12	24	29	80	60	47	5	M10x1
HSK40A-SF03-60	3	15	20	60	40	-	-	-
HSK40A-SF04-60	4	15	20	60	40	-	-	-
HSK40A-SF05-60	5	15	20	60	40	-	-	-
HSK40A-SF06-80	6	21	27	80	60	36	10	M5
HSK40A-SF08-80	8	21	27	80	60	36	10	M6
HSK40A-SF10-80	10	24	32	80	60	42	10	M8x1
HSK40A-SF12-90	12	24	32	90	70	47	10	M10x1
HSK40A-SF14-90	14	27	34	90	70	47	10	M10x1
HSK40A-SF16-90	16	27	34	90	70	50	10	M12x1
HSK50A-SF03-80	3	15	20	80	54	-	-	-
HSK50A-SF04-80	4	15	20	80	54	-	-	-
HSK50A-SF05-80	5	15	20	80	54	-	-	-
HSK50A-SF06-80	6	21	27	80	54	36	10	M5
HSK50A-SF08-80	8	21	27	80	54	36	10	M6
HSK50A-SF10-85	10	24	32	85	59	42	10	M8x1
HSK50A-SF12-90	12	24	32	90	64	47	10	M10x1
HSK50A-SF14-90	14	27	34	90	64	47	10	M10x1
HSK50A-SF16-95	16	27	34	95	69	50	10	M12x1
HSK50A-SF18-95	18	33	42	95	69	50	10	M12x1
HSK50A-SF20-100	20	33	42	100	74	52	10	M16x1

Cat No	d	D	D1	L	L2	L1	N	G
HSK63A-SF03-80	3	15	20	80	54	-	-	-
HSK63A-SF04-80	4	15	20	80	54	-	-	-
HSK63A-SF05-80	5	15	20	80	54	-	-	-
HSK63A-SF06-80	6	21	27	80	54	36	10	M5
HSK63A-SF08-80	8	21	27	80	54	36	10	M6
HSK63A-SF10-85	10	24	32	85	59	42	10	M8x1
HSK63A-SF12-90	12	24	32	90	64	47	10	M10x1
HSK63A-SF14-90	14	27	34	90	64	47	10	M10x1
HSK63A-SF16-95	16	27	34	95	69	50	10	M12x1
HSK63A-SF18-95	18	33	42	95	69	50	10	M12x1
HSK63A-SF20-100	20	33	42	100	74	52	10	M16x1
HSK63A-SF25-115	25	44	52.5	115	89	58	10	M16x1
HSK63A-SF32-120	32	44	52.5	120	94	62	10	M16x1
HSK63A-SF04-120	4	15	20	120	94	-	-	-
HSK63A-SF06-120	6	21	27	120	94	36	10	M5
HSK63A-SF08-120	8	21	27	120	94	36	10	M6
HSK63A-SF10-120	10	24	32	120	94	42	10	M8x1
HSK63A-SF12-120	12	24	32	120	94	47	10	M10x1
HSK63A-SF14-120	14	27	34	120	94	47	10	M10x1
HSK63A-SF16-120	16	27	34	120	94	50	10	M12x1
HSK63A-SF18-120	18	33	42	120	94	50	10	M12x1
HSK63A-SF20-120	20	33	42	120	94	52	10	M16x1
HSK63A-SF25-120	25	44	52.5	120	94	58	10	M16x1
HSK63A-SF32-120	32	44	52.5	120	94	62	10	M16x1

Cat No	d	D	D1	L	L2	L1	N	G
HSK63A-SF04-160	4	15	25	160	134	-	-	-
HSK63A-SF06-160	6	21	32	160	134	36	10	M5
HSK63A-SF08-160	8	21	32	160	134	36	10	M6
HSK63A-SF10-160	10	24	34	160	134	42	10	M8x1
HSK63A-SF12-160	12	24	34	160	134	47	10	M10x1
HSK63A-SF14-160	14	27	42	160	134	47	10	M10x1
HSK63A-SF16-160	16	27	42	160	134	50	10	M12x1
HSK63A-SF18-160	18	33	50	160	134	50	10	M12x1
HSK63A-SF20-160	20	33	50	160	134	52	10	M16x1
HSK63A-SF25-160	25	44	52.5	160	134	58	10	M16x1
HSK63A-SF32-160	32	44	52.5	160	134	62	10	M16x1
HSK63A-SF06-200	6	21	32	200	174	36	10	M5
HSK63A-SF08-200	8	21	32	200	174	36	10	M6
HSK63A-SF10-200	10	24	34	200	174	42	10	M8x1
HSK63A-SF12-200	12	24	34	200	174	47	10	M10x1
HSK63A-SF14-200	14	27	42	200	174	47	10	M10x1
HSK63A-SF16-200	16	27	42	200	174	50	10	M12x1
HSK63A-SF18-200	18	33	50	200	174	50	10	M12x1
HSK63A-SF20-200	20	33	50	200	174	52	10	M16x1
HSK63A-SF25-200	25	44	52.5	200	174	58	10	M16x1
HSK63A-SF32-200	32	44	52.5	200	174	62	10	M16x1

Cat No	d	D	D1	L	L2	L1	N	G
HSK100A-SF06-85	6	21	27	85	56	36	10	M5
HSK100A-SF08-85	8	21	27	85	56	36	10	M6
HSK100A-SF10-90	10	24	32	90	61	42	10	M8x1
HSK100A-SF12-95	12	24	32	95	66	47	10	M10x1
HSK100A-SF14-95	14	27	34	95	66	47	10	M10x1
HSK100A-SF16-100	16	27	34	100	71	50	10	M12x1
HSK100A-SF18-100	18	33	42	100	71	50	10	M12x1
HSK100A-SF20-105	20	33	42	105	76	52	10	M16x1
HSK100A-SF25-115	25	44	53	115	86	58	10	M16x1
HSK100A-SF32-120	32	44	53	120	91	62	10	M16x1
HSK100A-SF06-120	6	21	27	120	91	36	10	M5
HSK100A-SF08-120	8	21	27	120	91	36	10	M6
HSK100A-SF10-120	10	24	32	120	91	42	10	M8x1
HSK100A-SF12-120	12	24	32	120	91	47	10	M10x1
HSK100A-SF14-120	14	27	34	120	91	47	10	M10x1
HSK100A-SF16-120	16	27	34	120	91	50	10	M12x1
HSK100A-SF18-120	18	33	42	120	91	50	10	M12x1
HSK100A-SF20-120	20	33	42	120	91	52	10	M16x1
HSK100A-SF25-120	25	44	53	120	91	58	10	M16x1
HSK100A-SF32-120	32	44	53	120	91	62	10	M16x1

Cat No	d	D	D1	L	L2	L1	N	G
HSK100A-SF06-160	6	21	32	160	131	36	10	M5
HSK100A-SF08-160	8	21	32	160	131	36	10	M6
HSK100A-SF10-160	10	24	34	160	131	42	10	M8x1
HSK100A-SF12-160	12	24	34	160	131	47	10	M10x1
HSK100A-SF14-160	14	27	42	160	131	47	10	M10x1
HSK100A-SF16-160	16	27	42	160	131	50	10	M12x1
HSK100A-SF18-160	18	33	50	160	131	50	10	M12x1
HSK100A-SF20-160	20	33	50	160	131	52	10	M16x1
HSK100A-SF25-160	25	44	60	160	131	58	10	M16x1
HSK100A-SF32-160	32	44	60	160	131	62	10	M16x1
HSK100A-SF06-200	6	21	32	200	171	36	10	M5
HSK100A-SF08-200	8	21	32	200	171	36	10	M6
HSK100A-SF10-200	10	24	34	200	171	42	10	M8x1
HSK100A-SF12-200	12	24	34	200	171	47	10	M10x1
HSK100A-SF14-200	14	27	42	200	171	47	10	M10x1
HSK100A-SF16-200	16	27	42	200	171	50	10	M12x1
HSK100A-SF18-200	18	33	50	200	171	50	10	M12x1
HSK100A-SF20-200	20	33	50	200	171	52	10	M16x1
HSK100A-SF25-200	25	44	60	200	171	58	10	M16x1
HSK100A-SF32-200	32	44	60	200	171	62	10	M16x1

HSK-E热缩刀柄标准型
HSK-E Shrink fit chuck 4.5°



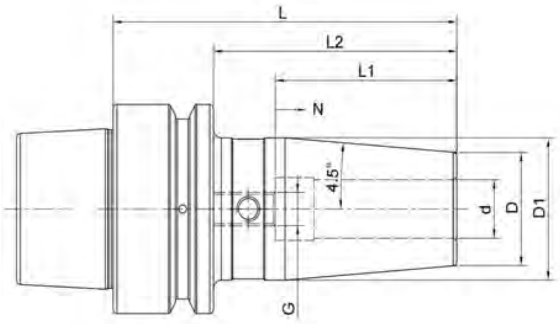

Cat No	d	D	D1	L	L2	L1	N	G
HSK32E-SF03-60	3	15	20	60	40	-	-	-
HSK32E-SF04-60	4	15	20	60	40	-	-	-
HSK32E-SF05-60	5	15	20	60	40	-	-	-
HSK32E-SF06-70	6	20	26	70	50	36	10	M5
HSK32E-SF08-70	8	20	26	70	50	36	10	M6
HSK32E-SF10-70	10	24	29	70	50	42	10	M8x1
HSK32E-SF12-70	12	24	29	70	50	47	10	M10x1
HSK40E-SF03-60	3	15	20	60	40	-	-	-
HSK40E-SF04-60	4	15	20	60	40	-	-	-
HSK40E-SF05-60	5	15	20	60	40	-	-	-
HSK40E-SF06-65	6	21	27	65	45	36	-	-
HSK40E-SF08-65	8	21	27	65	45	36	-	-
HSK40E-SF10-65	10	24	30	65	45	42	-	-
HSK40E-SF12-65	12	24	30	65	45	47	-	-
HSK40E-SF03-80	3	15	20	80	60	-	-	-
HSK40E-SF04-80	4	15	20	80	60	-	-	-
HSK40E-SF05-80	5	15	20	80	60	-	-	-
HSK40E-SF06-80	6	21	27	80	60	36	10	M5
HSK40E-SF08-80	8	21	27	80	60	36	10	M6
HSK40E-SF10-80	10	24	32	80	60	42	10	M8x1
HSK40E-SF12-90	12	24	32	90	70	47	10	M10x1
HSK40E-SF16-90	16	27	34	90	70	50	10	M12x1
HSK40E-SF03-120	3	15	20	120	100	-	-	-
HSK40E-SF04-120	4	15	20	120	100	-	-	-
HSK40E-SF05-120	5	15	20	120	100	-	-	-
HSK40E-SF06-120	6	21	27	120	100	36	10	M5
HSK40E-SF08-120	8	21	27	120	100	36	10	M6
HSK40E-SF10-120	10	24	32	120	100	42	10	M8x1
HSK40E-SF12-120	12	24	32	120	100	47	10	M10x1

Cat No	d	D	D1	L	L2	L1	N	G
HSK50E-SF03-80	3	15	20	80	54	-	-	-
HSK50E-SF04-80	4	15	20	80	54	-	-	-
HSK50E-SF05-80	5	15	20	80	54	-	-	-
HSK50E-SF06-80	6	21	27	80	54	36	10	M5
HSK50E-SF08-80	8	21	27	80	54	36	10	M6
HSK50E-SF10-85	10	24	32	85	59	42	10	M8x1
HSK50E-SF12-90	12	24	32	90	64	47	10	M10x1
HSK50E-SF14-90	14	27	34	90	64	47	10	M10x1
HSK50E-SF16-95	16	27	34	95	69	50	10	M12x1
HSK50E-SF18-95	18	33	42	95	69	50	10	M12x1
HSK50E-SF20-100	20	33	42	100	74	52	10	M16x1
HSK63E-SF06-90	6	21	27	90	64	36	10	M5
HSK63E-SF08-90	8	21	27	90	64	36	10	M6
HSK63E-SF10-90	10	24	32	90	64	42	10	M8x1
HSK63E-SF12-90	12	24	32	90	64	47	10	M10x1
HSK63E-SF14-90	14	27	34	90	64	47	10	M10x1
HSK63E-SF16-95	16	27	34	95	69	50	10	M12x1
HSK63E-SF18-95	18	33	42	95	69	50	10	M12x1
HSK63E-SF20-100	20	33	42	100	74	52	10	M16x1
HSK63E-SF25-120	25	44	53	120	89	58	10	M16x1

HSK-F热缩刀柄标准型
HSK-F Shrink fit chuck 4.5°



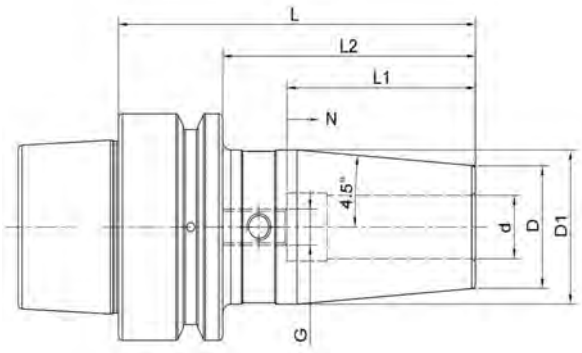

Cat No	d	D	D1	L	L2	L1	N	G
HSK40F-SF03-60	3	15	20	60	40	-	-	-
HSK40F-SF04-60	4	15	20	60	40	-	-	-
HSK40F-SF05-60	5	15	20	60	40	-	-	-
HSK40F-SF06-65	6	21	27	65	45	36	5	M5
HSK40F-SF08-65	8	21	27	65	45	36	5	M6
HSK40F-SF10-65	10	24	31	65	45	42	5	M8x1
HSK40F-SF12-65	12	24	31	65	45	42	5	M10x1
HSK40F-SF06-80	6	21	27	80	60	36	10	M5
HSK40F-SF08-80	8	21	27	80	60	36	10	M6
HSK40F-SF10-80	10	24	32	80	60	42	10	M8x1
HSK40F-SF12-90	12	24	32	90	70	47	10	M10x1
HSK40F-SF16-90	16	27	34	90	70	50	10	M12x1
HSK63F-SF03-90	3	15	20	90	64	-	-	-
HSK63F-SF04-90	4	15	20	90	64	-	-	-
HSK63F-SF05-90	5	15	20	90	64	-	-	-
HSK63F-SF06-90	6	21	27	90	64	36	10	M5
HSK63F-SF08-90	8	21	27	90	64	36	10	M6
HSK63F-SF10-90	10	24	32	90	64	42	10	M8x1
HSK63F-SF12-90	12	24	32	90	64	47	10	M10x1
HSK63F-SF14-95	14	27	34	95	69	47	10	M10x1
HSK63F-SF16-95	16	27	34	95	69	50	10	M12x1
HSK63F-SF18-95	18	33	42	95	69	50	10	M12x1
HSK63F-SF20-100	20	33	42	100	74	52	10	M16x1
HSK63F-SF25-115	25	36	42	115	89	58	10	M16x1

Cat No	d	D	D1	L	L2	L1	N	G
HSK63F-SF03-120	3	15	20	120	94	-	-	-
HSK63F-SF04-120	4	15	20	120	94	-	-	-
HSK63F-SF05-120	5	15	20	120	94	-	-	-
HSK63F-SF06-120	6	21	27	120	94	36	10	M5
HSK63F-SF08-120	8	21	27	120	94	36	10	M6
HSK63F-SF10-120	10	24	32	120	94	42	10	M8x1
HSK63F-SF12-120	12	24	32	120	94	47	10	M10x1
HSK63F-SF14-120	14	27	34	120	94	47	10	M10x1
HSK63F-SF16-120	16	27	34	120	94	50	10	M12x1
HSK63F-SF18-120	18	33	42	120	94	50	10	M12x1
HSK63F-SF20-120	20	33	42	120	94	52	10	M16x1
HSK63F-SF03-160	3	15	27	160	134	-	-	-
HSK63F-SF04-160	4	15	27	160	134	-	-	-
HSK63F-SF05-160	5	15	27	160	134	-	-	-
HSK63F-SF06-160	6	21	32	160	134	36	10	M5
HSK63F-SF08-160	8	21	32	160	134	36	10	M6
HSK63F-SF10-160	10	24	34	160	134	42	10	M8x1
HSK63F-SF12-160	12	24	34	160	134	47	10	M10x1
HSK63F-SF14-160	14	27	42	160	134	47	10	M10x1
HSK63F-SF16-160	16	27	42	160	134	50	10	M12x1
HSK63F-SF18-160	18	33	51	160	134	50	10	M12x1
HSK63F-SF20-160	20	33	51	160	134	52	10	M16x1

热缩刀柄套装
Shrink fit chuck SET





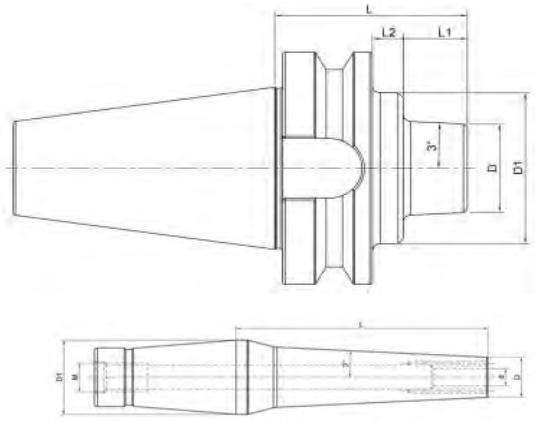

Cat No	ToolHolder Model	Extension Model	Extension Quantity
BT40-TSF12-45-6 pcs	BT40-TSF12-45	12-SF3/4/6/8/10/12-80	6
BT40-TSF12-75-6 pcs	BT40-TSF12-75	12-SF3/4/6/8/10/12-80	6
SK40-TSF12-45-6 pcs	SK40-TSF12-45	12-SF3/4/6/8/10/12-80	6
SK40-TSF12-75-6 pcs	SK40-TSF12-75	12-SF3/4/6/8/10/12-80	6
HSK63A-TSF12-75-6 pcs	HSK63A-TSF12-75	12-SF3/4/6/8/10/12-80	6
HSK63F-TSF12-75-6 pcs	HSK63F-TSF12-75	12-SF3/4/6/8/10/12-80	6

Cat No	ToolHolder Model	Extension Model	Extension Quantity
BT40-TSF12-45-6 pcs	BT40-TSF12-45	12-SF3/4/6/8/10/12-80S	6
BT40-TSF12-75-6 pcs	BT40-TSF12-75	12-SF3/4/6/8/10/12-80S	6
SK40-TSF12-45-6 pcs	SK40-TSF12-45	12-SF3/4/6/8/10/12-80S	6
SK40-TSF12-75-6 pcs	SK40-TSF12-75	12-SF3/4/6/8/10/12-80S	6
HSK63A-TSF12-75-6 pcs	HSK63A-TSF12-75	12-SF3/4/6/8/10/12-80S	6
HSK63F-TSF12-75-6 pcs	HSK63F-TSF12-75	12-SF3/4/6/8/10/12-80S	6

BT30 热缩刀柄3度，薄壁C型
BT30 Shrink chuck 3°slim form C



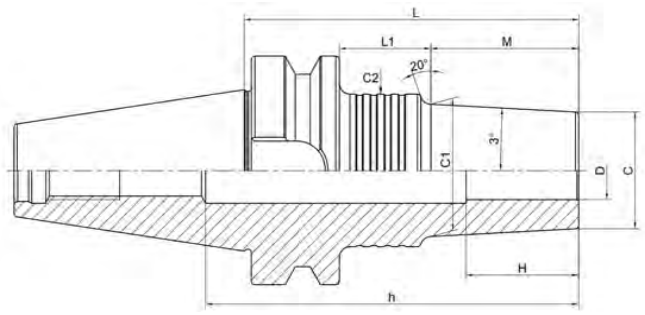

Cat No	D	C	L	M	L1	C1	C2	H	h
BT30-SFA3-60-M22	3	6	60	22	16	8.3	20	9	80
BT30-SFA3-75-M22	3	6	75	22	31	8.3	25	9	88
BT30-SFA3-80-M42	3	6	80	42	16	10.4	20	9	100
BT30-SFA3-95-M42	3	6	95	42	31	10.4	25	9	119
BT30-SFA3-120-M67	3	6	120	67	31	13	25	9	144
BT30-SFA4-60-M22	4	7	60	22	16	9.3	20	12	80
BT30-SFA4-75-M22	4	7	75	22	31	9.3	25	12	88
BT30-SFA4-95-M42	4	7	95	42	31	11.4	25	12	119
BT30-SFA4-120-M67	4	7	120	67	31	14	25	12	144
BT30-SFA6-60-M22	6	9	60	22	16	11.3	20	18	80
BT30-SFA6-75-M22	6	9	75	22	31	11.3	25	18	88
BT30-SFA6-95-M42	6	9	95	42	31	13.4	25	18	119
BT30-SFA6-120-M67	6	9	120	67	31	16	25	18	144

BT/SK热缩刀柄
BT/SK Shrink fit chuck 3°





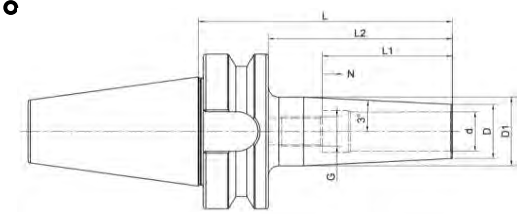

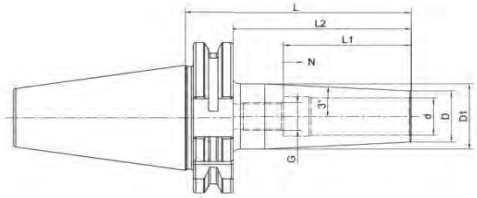

Cat No	d	D	D1	L	L2	L1	N	G
BT30-SFS03-80	3	9	13	80	58	-	-	-
BT30-SFS04-80	4	10	14	80	58	-	-	-
BT30-SFS06-80	6	12	-	80	58	36	5	M5
BT30-SFS08-80	8	14	-	80	58	36	5	M6
BT30-SFS10-80	10	16	-	80	58	42	5	M8x1
BT30-SFS12-80	12	18	-	80	58	47	5	M10x1
BT30-SFS16-80	16	22	-	80	58	50	5	M12x1
BT40-SFS03-90	3	9	13	90	63	-	-	-
BT40-SFS04-90	4	10	14	90	63	-	-	-
BT40-SFS06-90	6	12	18	90	63	36	5	M5
BT40-SFS08-90	8	14	20	90	63	36	5	M6
BT40-SFS10-90	10	16	22	90	63	42	5	M8x1
BT40-SFS12-90	12	18	24	90	63	47	5	M10x1
BT40-SFS16-90	16	22	28	90	63	50	5	M12x1
BT40-SFS03-120	3	9	16	120	93	-	-	-
BT40-SFS04-120	4	10	17	120	93	-	-	-
BT40-SFS06-120	6	12	21	120	93	36	5	M5
BT40-SFS08-120	8	14	23	120	93	36	5	M6
BT40-SFS10-120	10	16	25	120	93	42	5	M8x1
BT40-SFS12-120	12	18	27	120	93	47	5	M10x1
BT40-SFS16-120	16	22	31	120	93	50	5	M12x1
BT40-SFS03-160	3	9	19	160	133	-	-	-
BT40-SFS04-160	4	10	20	160	133	-	-	-
BT40-SFS06-160	6	12	24	160	133	36	5	M5
BT40-SFS08-160	8	14	26	160	133	36	5	M6
BT40-SFS10-160	10	16	28	160	133	42	5	M8x1
BT40-SFS12-160	12	18	30	160	133	47	5	M10x1
BT40-SFS16-160	16	22	34	160	133	50	5	M12x1

SK30-SFS03-80	3	9	13	80	60.9	-	-	-
SK30-SFS04-80	4	10	14	80	60.9	-	-	-
SK30-SFS06-80	6	12	18	80	60.9	36	5	M5
SK30-SFS08-80	8	14	20	80	60.9	36	5	M6
SK30-SFS10-80	10	16	22	80	60.9	42	5	M8x1
SK30-SFS12-80	12	18	24	80	60.9	47	5	M10x1
SK30-SFS16-80	16	22	28	80	60.9	50	5	M12x1
SK40-SFS03-90	3	9	13	90	70.9	-	-	-
SK40-SFS04-90	4	10	14	90	70.9	-	-	-
SK40-SFS06-90	6	12	18	90	70.9	36	5	M5
SK40-SFS08-90	8	14	20	90	70.9	36	5	M6
SK40-SFS10-90	10	16	22	90	70.9	42	5	M8x1
SK40-SFS12-90	12	18	24	90	70.9	47	5	M10x1
SK40-SFS16-90	16	22	28	90	70.9	50	5	M12x1
SK40-SFS03-120	3	9	16	120	100.9	-	-	-
SK40-SFS04-120	4	10	17	120	100.9	-	-	-
SK40-SFS06-120	6	12	21	120	100.9	36	5	M5
SK40-SFS08-120	8	14	23	120	100.9	36	5	M6
SK40-SFS10-120	10	16	25	120	100.9	42	5	M8x1
SK40-SFS12-120	12	18	27	120	100.9	47	5	M10x1
SK40-SFS16-120	16	22	31	120	100.9	50	5	M12x1
SK40-SFS03-160	3	9	19	160	140.9	-	-	-
SK40-SFS04-160	4	10	20	160	140.9	-	-	-
SK40-SFS06-160	6	12	24	160	140.9	36	5	M5
SK40-SFS08-160	8	14	26	160	140.9	36	5	M6
SK40-SFS10-160	10	16	28	160	140.9	42	5	M8x1
SK40-SFS12-160	12	18	30	160	140.9	47	5	M10x1
SK40-SFS16-160	16	22	34	160	140.9	50	5	M12x1

HSK-A热缩刀柄
HSK-A Shrink fit chuck 3°



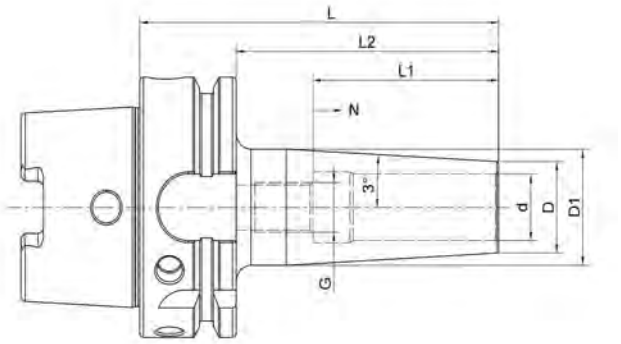

Cat No	d	D	D1	L	L2	L1	N	G
HSK50A-SFS03-90	3	9	13	90	64	-	-	-
HSK50A-SFS04-90	4	10	14	90	64	-	-	-
HSK50A-SFS06-90	6	12	18	90	64	36	5	M5
HSK50A-SFS08-90	8	14	20	90	64	36	5	M6
HSK50A-SFS10-90	10	16	22	90	64	42	5	M8x1
HSK50A-SFS12-90	12	18	24	90	64	47	5	M10x1
HSK50A-SFS16-90	16	22	28	90	64	50	5	M12x1
HSK50A-SFS03-120	3	9	16	120	94	-	-	-
HSK50A-SFS04-120	4	10	17	120	94	-	-	-
HSK50A-SFS06-120	6	12	21	120	94	36	5	M5
HSK50A-SFS08-120	8	14	23	120	94	36	5	M6
HSK50A-SFS10-120	10	16	25	120	94	42	5	M8x1
HSK50A-SFS12-120	12	18	27	120	94	47	5	M10x1
HSK50A-SFS16-120	16	22	31	120	94	50	5	M12x1
HSK50A-SFS04-160	4	10	20	160	134	-	-	-
HSK50A-SFS06-160	6	12	24	160	134	36	5	M5
HSK50A-SFS08-160	8	14	26	160	134	36	5	M6
HSK50A-SFS10-160	10	16	28	160	134	42	5	M8x1
HSK50A-SFS12-160	12	18	30	160	134	47	5	M10x1
HSK50A-SFS16-160	16	22	34	160	134	50	5	M12x1

Cat No	d	D	D1	L	L2	L1	N	G
HSK63A-SFS04-90	4	10	14	90	64	-	-	-
HSK63A-SFS06-90	6	12	18	90	64	36	5	M5
HSK63A-SFS08-90	8	14	20	90	64	36	5	M6
HSK63A-SFS10-90	10	16	22	90	64	42	5	M8x1
HSK63A-SFS12-90	12	18	24	90	64	47	5	M10x1
HSK63A-SFS16-90	16	22	28	90	64	50	5	M12x1
HSK63A-SFS04-120	4	10	17	120	94	-	-	-
HSK63A-SFS06-120	6	12	21	120	94	36	5	M5
HSK63A-SFS08-120	8	14	23	120	94	36	5	M6
HSK63A-SFS10-120	10	16	25	120	94	42	5	M8x1
HSK63A-SFS12-120	12	18	27	120	94	47	5	M10x1
HSK63A-SFS16-120	16	22	31	120	94	50	5	M12x1
HSK63A-SFS03-160	3	9	19	160	134	-	-	-
HSK63A-SFS04-160	4	10	20	160	134	-	-	-
HSK63A-SFS06-160	6	12	24	160	134	36	5	M5
HSK63A-SFS08-160	8	14	26	160	134	36	5	M6
HSK63A-SFS10-160	10	16	28	160	134	42	5	M8x1
HSK63A-SFS12-160	12	18	30	160	134	47	5	M10x1
HSK63A-SFS16-160	16	22	34	160	134	50	5	M12x1

HSK-E热缩刀柄
HSK-E Shrink fit chuck 3°



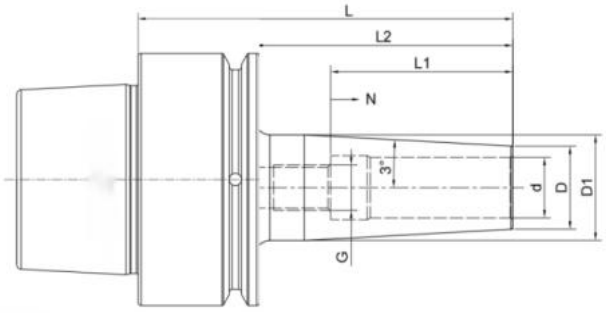

Cat No	d	D	D1	L	L2	L1	N	G
HSK32E-SFS3-64	3	9	13	64	40	20	5	M6
HSK32E-SFS4-64	4	10	14	64	40	20	5	M6
HSK32E-SFS6-74	6	12	17	74	50	36	5	M5
HSK32E-SFS8-74	8	14	19	74	50	36	5	M6
HSK32E-SFS10-78	10	16	21	78	55	42	5	M8x1
HSK40E-SFS3-50	3	9	12	50	24	20	5	M6
HSK40E-SFS4-50	4	10	12,5	50	24	20	5	M6
HSK40E-SFS6-50	6	12	15	50	24	34	-	-
HSK40E-SFS6-60	6	12	16	60	38	36	-	-
HSK40E-SFS8-60	8	14	18	60	38	36	-	-
HSK40E-SFS10-60	10	16	20	60	38	42	-	-
HSK40E-SFS12-60	12	18	22	60	38	42	-	-
HSK50E-SFS3-70	3	9	13	70	42	20	5	M6
HSK50E-SFS4-70	4	10	14	70	42	20	5	M6
HSK50E-SFS6-70	6	12	16	70	42	36	5	M5
HSK50E-SFS8-70	8	14	18	70	42	36	5	M6
HSK50E-SFS10-70	10	16	20	70	42	42	-	-
HSK50E-SFS12-70	12	18	22	70	42	47	-	-
HSK50E-SFS16-70	16	22	26	70	41	47	-	-
HSK50E-SFS6-90	6	12	18	90	60	36	5	M5
HSK50E-SFS8-90	8	14	20	90	60	36	5	M6
HSK50E-SFS10-90	10	16	22	90	60	42	5	M8x1
HSK50E-SFS12-90	12	18	24	90	60	47	5	M10x1
HSK50E-SFS16-90	16	22	28	90	60	50	5	M16x1

分体热缩延长杆
Shrink chuck extension slim



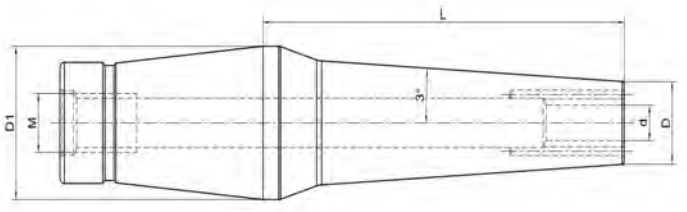

Cat No	d	D	D1	L	M	a
12-SF3-35	3	7.5	26	35	M10	3
12-SF3-55	3	7.5	26	55	M10	3
12-SF3-80	3	7.5	26	80	M10	3
12-SF4-35	4	10	26	35	M10	3
12-SF4-55	4	10	26	55	M10	3
12-SF4-80	4	10	26	80	M10	3
12-SF6-35	6	12	26	35	M10	3
12-SF6-55	6	12	26	55	M10	3
12-SF6-80	6	12	26	80	M10	3
12-SF8-35	8	14	26	35	M10	3
12-SF8-55	8	14	26	55	M10	3
12-SF8-80	8	14	26	80	M10	3
12-SF10-35	10	16	26	35	M10	3
12-SF10-55	10	16	26	55	M10	3
12-SF10-80	10	16	26	80	M10	3
12-SF12-35	12	20	26	35	M10	3
12-SF12-55	12	20	26	55	M10	3
12-SF12-80	12	20	26	80	M10	3

直柄热缩延长杆
Shrink fit extension



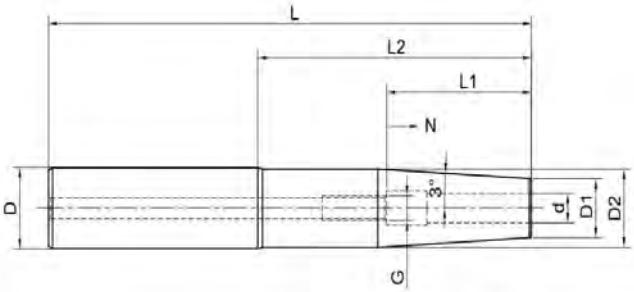

Cat No	d	D1	D2	D	L	L2	L1	N	G
C12-SFS03-120	3	9	11.8	12	120	-	73	-	-
C12-SFS04-120	4	10	11.8	12	120	-	73	-	-
C12-SFS05-120	5	11	11.8	12	120	-	73	-	-
C12-SFS06-120	6	12	17	12	120	36	73	10	M5
C12-SFS08-120	8	14	19	12	120	36	73	10	M6
C16-SFS03-120	3	9	13	16	120	-	70	-	-
C16-SFS04-120	4	10	14	16	120	-	70	-	-
C16-SFS05-120	5	11	15	16	120	-	70	-	-
C16-SFS06-120	6	12	15.8	16	120	36	70	10	M5
C16-SFS08-120	8	14	19	16	120	36	70	10	M6
C20-SFS03-120	3	9	13	20	120	-	68	-	-
C20-SFS04-120	4	10	14	20	120	-	68	-	-
C20-SFS05-120	5	11	15	20	120	-	68	-	-
C20-SFS06-120	6	12	16	20	120	36	68	10	M5
C20-SFS08-120	8	14	19	20	120	36	68	10	M6
C20-SFS10-120	10	16	19.8	20	120	42	68	10	M8x1
C20-SFS12-120	12	18	19.8	20	120	47	68	10	M10x1
C12-SFS03-160	3	9	11.8	12	160	-	113	-	-
C12-SFS04-160	4	10	11.8	12	160	-	113	-	-
C16-SFS03-160	3	9	13	16	160	-	110	-	-
C16-SFS04-160	4	10	14	16	160	-	110	-	-
C16-SFS05-160	5	11	15	16	160	-	110	-	-

Cat No	d	D1	D2	D	L	L2	L1	N	G
C20-SFS05-160	5	11	15	20	160	-	110	-	-
C20-SFS06-160	6	12	16	20	160	36	108	10	M5
C20-SFS08-160	8	14	19	20	160	36	108	10	M6
C25-SFS08-160	8	14	19	25	160	36	108	10	M6
C25-SFS10-160	10	16	21	25	160	42	108	10	M8x1
C25-SFS12-160	12	18	23	25	160	47	108	10	M10x1
C25-SFS14-160	14	20	24.8	25	160	47	108	10	M10x1
C25-SFS16-160	16	22	24.8	25	160	50	108	10	M12x1
C32-SFS10-160	10	16	21	32	160	42	98	10	M8x1
C32-SFS12-160	12	18	23	32	160	47	98	10	M10x1
C32-SFS14-160	14	20	25	32	160	47	98	10	M10x1
C32-SFS16-160	16	22	28	32	160	50	98	10	M12x1
C32-SFS18-160	18	25	30	32	160	50	98	10	M12x1
C32-SFS20-160	20	26	31.8	32	160	52	98	10	M16x1
C16-SFS03-200	3	9	13	16	200	-	150	-	-
C16-SFS04-200	4	10	14	16	200	-	150	-	-
C16-SFS05-200	5	11	15	16	200	-	150	-	-
C16-SFS06-200	6	12	15.8	16	200	36	150	10	M5
C16-SFS08-200	8	14	19	16	200	36	150	10	M6
C20-SFS06-250	6	12	16	20	250	36	198	10	M5
C20-SFS08-250	8	14	19	20	250	36	198	10	M6
C20-SFS10-250	10	16	19.8	20	250	42	198	10	M8x1
C25-SFS12-250	12	18	23	25	250	47	192	10	M10x1
C25-SFS16-250	16	22	24.8	25	250	50	192	10	M12x1
C20-SFS06-300	6	12	16	20	300	36	248	10	M5
C20-SFS08-300	8	14	19	20	300	36	248	10	M6
C20-SFS10-300	10	16	19.8	20	300	42	248	10	M8x1
C25-SFS12-300	12	18	23	25	300	47	242	10	M10x1
C25-SFS16-300	16	22	24.8	25	300	50	242	10	M12x1

BT40 热缩刀柄3度，薄壁C型
BT40 Shrink chuck 3°slim form C



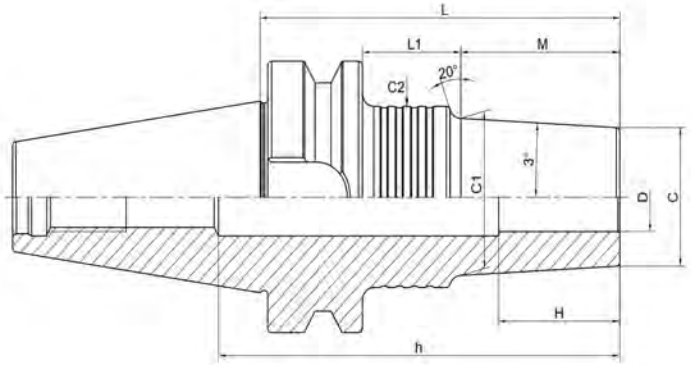

Cat No	D	C	L	M	L1	C1	C2	H	h
BT40-SFA4-95-M42	4	7	95	42	26	11.4	25	12	130
BT40-SFA4-120-M67	4	7	120	67	26	14	25	12	155
BT40-SFA4-125-M42	4	7	125	42	56	11.4	26	12	160
BT40-SFA4-150-M67	4	7	150	67	56	14	25	12	185
BT40-SFA4-150-M97	4	7	150	97	26	17.2	26	12	185
BT40-SFA4-180-M97	4	7	180	97	56	17.2	25	12	215
BT40-SFA6-95-M42	6	9	95	42	26	13.4	25	18	130
BT40-SFA6-120-M67	6	9	120	67	26	16	26	18	155
BT40-SFA6-125-M42	6	9	125	42	56	13.4	25	18	160
BT40-SFA6-150-M67	6	9	150	67	56	16	25	18	185
BT40-SFA6-150-M97	6	9	150	97	26	19.2	36	18	185
BT40-SFA6-180-M97	6	9	180	97	56	19.2	36	18	215
BT40-SFA8-95-M42	8	11	95	42	26	15.4	25	24	130
BT40-SFA8-120-M67	8	11	120	67	26	18	36	24	155
BT40-SFA8-125-M42	8	11	125	42	56	15.4	36	24	160
BT40-SFA8-150-M67	8	11	150	67	56	18	36	24	185
BT40-SFA8-150-M97	8	11	150	97	26	21.2	36	24	185
BT40-SFA8-180-M97	8	11	180	97	56	21.2	36	24	215

Cat No	D	C	L	M	L1	C1	C2	H	h
BT40-SFA10-95-M42	10	13	95	42	26	17.4	25	30	130
BT40-SFA10-120-M67	10	13	120	67	26	20	36	30	155
BT40-SFA10-125-M42	10	13	125	42	56	17.4	36	30	160
BT40-SFA10-150-M67	10	13	150	67	56	20	36	30	185
BT40-SFA10-150-M97	10	13	150	97	26	23.2	36	30	185
BT40-SFA10-180-M97	10	13	180	97	56	23.2	36	30	215
BT40-SFA10-95-M42	12	15	95	42	26	19.4	32	30	130
BT40-SFA10-120-M67	12	16	120	67	26	22	32	30	155
BT40-SFA10-125-M42	12	17	125	42	56	19.4	36	30	160
BT40-SFA10-150-M67	12	18	150	67	56	22	36	30	185
BT40-SFA10-150-M97	12	19	150	97	26	25.2	36	30	185
BT40-SFA10-180-M97	12	22	180	97	56	25.2	36	30	215

Cat No	D	C	L	M	L1	L2	C1	C2	C3	H	h
BT40-SFA4-155-M42	4	7	155	42	33	53	11.4	26	40	12	190
BT40-SFA4-180-M67	4	7	180	67	33	53	14	26	40	12	215
BT40-SFA4-210-M97	4	7	210	97	33	53	17.2	25	39	12	245
BT40-SFA6-155-M42	6	9	155	42	33	53	13.4	25	39	18	190
BT40-SFA6-180-M67	6	9	180	67	33	53	16	26	40	18	215
BT40-SFA6-210-M97	6	9	210	97	28	58	19.2	36	50	18	245
BT40-SFA8-155-M42	8	11	155	42	33	53	15.4	25	39	24	190
BT40-SFA8-180-M67	8	11	180	67	28	58	18	36	50	24	215
BT40-SFA8-210-M97	8	11	210	97	28	58	21.2	36	50	24	245
BT40-SFA10-155-M42	10	13	155	42	28	58	17.4	36	50	30	190
BT40-SFA10-180-M67	10	13	180	67	28	28	20	36	50	30	215
BT40-SFA10-210-M97	10	13	210	97	28	58	23.2	36	50	30	245
BT40-SFA10-155-M42	12	20	155	42	28	58	19.4	36	50	30	190
BT40-SFA10-180-M67	12	21	180	67	30	56	22	32	46	30	215
BT40-SFA10-210-M97	12	23	210	97	28	58	25.2	36	50	30	245

Cat No	D	C	L	M	L1	L2	C1	C2	C3	H	h
BT50-SFA4-170-M42	4	7	170	42	33	57	11.4	25	39	12	225
BT50-SFA4-195-M67	4	7	195	67	33	57	14	25	39	12	250
BT50-SFA4-225-M97	4	7	225	97	33	57	17.2	26	40	12	280
BT50-SFA6-170-M42	6	9	170	42	33	57	13.4	26	40	18	225
BT50-SFA6-195-M67	6	9	195	67	33	57	16	26	40	18	250
BT50-SFA6-225-M97	6	9	225	97	28	62	19.2	36	50	18	280
BT50-SFA8-170-M42	8	11	170	42	33	57	15.4	25	39	24	225
BT50-SFA8-195-M67	8	11	195	67	28	62	18	36	50	24	250
BT50-SFA8-225-M97	8	11	225	97	28	62	21.2	36	50	24	280
BT50-SFA10-170-M42	10	13	170	42	33	57	17.4	25	39	30	225
BT50-SFA10-195-M67	10	13	195	67	28	62	20	36	50	30	250
BT50-SFA10-225-M97	10	13	225	97	28	62	23.2	36	50	30	280
BT50-SFA12-170-M42	12	15	170	42	30	60	19.4	32	46	30	225
BT50-SFA12-195-M67	12	15	195	67	28	62	22	36	50	30	250
BT50-SFA12-225-M97	12	15	225	97	28	62	25.2	36	50	30	280

Cat No	D	C	L	M	L1	C1	C2	H	h
BT50-SFA4-110-M42	4	7	110	42	30	11.4	26	12	165
BT50-SFA4-135-M67	4	7	135	67	30	14	25	12	190
BT50-SFA4-140-M42	4	7	140	42	60	11.4	25	12	195
BT50-SFA4-165-M67	4	7	165	67	60	14	26	12	220
BT50-SFA4-165-M97	4	7	165	97	30	17.2	25	12	220
BT50-SFA4-195-M97	4	7	195	97	60	17.2	25	12	250
BT50-SFA6-110-M42	6	9	110	42	30	13.4	26	18	165
BT50-SFA6-135-M67	6	9	135	67	30	16	26	18	190
BT50-SFA6-140-M42	6	9	140	42	60	13.4	26	18	195
BT50-SFA6-165-M67	6	9	165	67	60	16	26	18	220
BT50-SFA6-165-M97	6	9	165	97	30	19.2	36	18	220
BT50-SFA6-195-M97	6	9	195	97	60	19.2	36	18	250
BT50-SFA8-110-M42	8	11	110	42	30	15.4	25	24	165
BT50-SFA8-135-M67	8	11	135	67	30	18	36	24	190
BT50-SFA8-140-M42	8	11	140	42	60	15.4	36	24	195
BT50-SFA8-165-M67	8	11	165	67	60	18	32	24	220
BT50-SFA8-165-M97	8	11	165	97	30	21.2	36	24	220
BT50-SFA8-195-M97	8	11	195	97	60	21.2	36	24	250

Cat No	D	C	L	M	L1	C1	C2	H	h
BT50-SFA10-110-M42	10	13	110	42	30	17.4	25	30	165
BT50-SFA10-135-M67	10	13	135	67	30	20	36	30	190
BT50-SFA10-140-M42	10	13	140	42	60	17.4	36	30	195
BT50-SFA10-165-M67	10	13	165	67	60	20	36	30	220
BT50-SFA10-165-M97	10	13	165	97	30	23.2	36	30	220
BT50-SFA10-195-M97	10	13	195	97	60	23.2	32	30	250
BT50-SFA12-110-M42	12	15	110	42	30	19.4	32	30	165
BT50-SFA12-135-M67	12	15	135	67	30	22	36	30	190
BT50-SFA12-140-M42	12	15	140	42	60	19.4	36	30	195
BT50-SFA12-165-M67	12	15	165	67	60	22	32	30	220
BT50-SFA12-165-M97	12	15	165	97	30	25.2	36	30	220
BT50-SFA12-195-M97	12	15	195	97	60	25.2	36	30	250

BT40 热缩刀柄3度，薄壁C型
BT40 Shrink chuck 3°slim form C



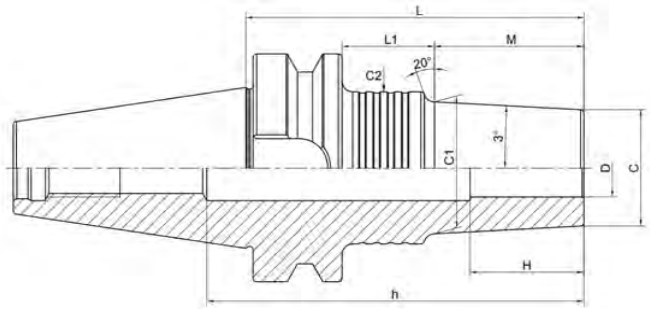

Cat No	D	C	L	M	L1	C1	C2	H	h
BT40-SFA6-95-M42	6	10	95	42	26	14.4	25	18	130
BT40-SFA6-120-M67	6	10	120	67	26	17	25	18	155
BT40-SFA6-125-M42	6	10	125	42	56	14.4	25	18	160
BT40-SFA6-150-M67	6	10	150	67	56	17	25	18	185
BT40-SFA6-150-M97	6	10	150	97	26	20.2	32	18	185
BT40-SFA6-180-M97	6	10	180	97	56	20.2	36	18	215
BT40-SFA6-180-M127	6	10	180	127	26	23.3	36	18	215
BT40-SFA6-210-M157	6	10	210	127	56	23.3	36	18	245
BT40-SFA6-210-M157	6	10	210	157	26	26.5	36	18	245
BT40-SFA6-240-MI157	6	10	240	157	56	26.5	36	18	275
BT40-SFA8-95-M42	8	13	95	42	26	17.4	32	24	130
BT40-SFA8-120-M67	8	13	120	67	26	20	32	24	155
BT40-SFA8-125-M42	8	13	125	42	56	17.4	36	24	160
BT40-SFA8-150-M67	8	13	150	67	56	20	36	24	185
BT40-SFA8-150-M97	8	13	150	97	26	23.2	32	24	185
BT40-SFA8-180-M97	8	13	180	97	56	23.2	36	24	215
BT40-SFA8-180-M127	8	13	180	127	26	26.3	36	24	215
BT40-SFA8-210-M127	8	13	210	127	56	26.3	36	24	245
BT40-SFSC8-210-M157	8	13	210	157	26	29.5	36	24	245
BT40-SFA8-240-M157	8	13	240	157	56	29.5	36	24	275
BT40-SFA10-95-M42	10	16	95	42	26	20.4	32	30	130
BT40-SFA10-120-M67	10	16	120	67	26	23	36	30	155
BT40-SFA10-125-M42	10	16	125	42	56	20.4	36	30	160
BT40-SFA10-150-M67	10	16	150	67	56	23	32	30	185
BT40-SFA10-150-M97	10	16	150	97	26	26.2	32	30	185
BT40-SFA10-180-M97	10	16	150	97	56	26.2	36	30	215

Cat No	D	C	L	M	L1	C1	C2	H	h
BT40-SFA10-180-M127	10	16	180	127	26	29.3	50	30	190
BT40-SFA10-210-M127	10	16	210	127	56	29.3	50	30	220
BT40-SFA10-210-M157	10	16	210	157	26	32.5	50	30	220
BT40-SFA10-240-M127	10	16	240	127	86	29.3	50	30	250
BT40-SFA10-240-M157	10	16	240	157	56	32.5	50	30	250
BT40-SFA10-270-M157	10	16	270	157	86	32.5	50	30	305
BT40-SFA12-95-M42	12	19	95	42	26	23.4	32	30	130
BT40-SFA12-120-M67	12	19	120	67	26	26	36	30	155
BT40-SFA12-125-M42	12	19	125	42	56	23.4	36	30	160
BT40-SFA12-150-M67	12	19	150	67	56	26	36	30	185
BT40-SFA12-150-M97	12	19	150	97	26	29.2	50	30	160
BT40-SFA12-180-M97	12	19	180	97	56	29.2	50	30	190
BT40-SFA12-180-M127	12	19	180	127	26	32.3	50	30	190
BT40-SFA12-210-M97	12	19	210	97	86	29.2	50	30	220
BT40-SFA12-210-M127	12	19	210	127	56	32.3	50	30	220
BT40-SFA12-210-M157	12	19	210	157	26	35.5	50	30	220
BT40-SFA12-240-M127	12	19	240	127	86	32.3	50	30	250
BT40-SFA12-240-M157	12	19	240	157	56	35.5	50	30	250
BT40-SFA12-270-M157	12	19	270	157	86	35.5	50	30	280
BT40-SFA16-95-M42	16	24	95	42	26	28.4	42	32	96
BT40-SFA16-120-M67	16	24	120	67	26	31	42	32	96
BT40-SFA16-125-M42	16	24	125	42	56	28.4	50	32	96
BT40-SFA16-150-M67	16	24	150	67	56	31	42	32	96
BT40-SFA16-150-M97	16	24	150	97	26	34.2	50	32	96
BT40-SFA16-155-M42	16	24	155	42	86	28.2	50	32	96
BT40-SFA16-180-M67	16	24	180	67	86	31	50	32	96
BT40-SFA16-180-M97	16	24	180	97	56	34.2	50	32	96

Cat No	D	C	L	M	L1	C1	C2	H	h
BT40-SFA16-180-M127	16	24	180	127	26	37.3	50	32	96
BT40-SFA16-210-M97	16	24	210	97	86	34.2	50	32	96
BT40-SFA16-210-M127	16	24	210	127	56	37.3	50	32	96
BT40-SFA16-210-M157	16	24	210	157	26	40.5	50	32	96
BT40-SFA16-240-M127	16	24	240	127	86	37.3	53	32	96
BT40-SFA16-240-M157	16	24	240	157	56	40.5	50	32	96
BT40-SFA16-270-M157	16	24	270	157	86	40.5	50	32	96
BT40-SFA20-95-M42	20	29	95	42	26	33.4	42	40	105
BT40-SFA20-120-M67	20	29	120	67	26	36	42	40	120
BT40-SFA20-125-M42	20	29	125	42	56	33.4	50	40	120
BT40-SFA20-150-M67	20	29	150	67	56	36	50	40	120
BT40-SFA20-150-M97	20	29	150	97	26	39.2	50	40	120
BT40-SFA20-180-M67	20	29	180	67	86	26	50	40	120
BT40-SFA20-180-M97	20	29	180	97	56	39.2	50	40	120
BT40-SFA20-180-M127	20	29	180	127	26	42.3	50	40	120
BT40-SFA20-210-M97	20	29	210	97	86	39.2	50	40	120
BT40-SFA20-210-M127	20	29	210	127	56	42.3	50	40	120
BT40-SFA20-210-M157	20	29	210	157	26	45.5	50	40	120
BT40-SFA20-240-M127	20	29	240	127	86	42.3	50	40	120
BT40-SFA20-240-M157	20	29	240	157	56	45.5	50	40	120
BT40-SFA20-270-M157	20	29	270	157	86	45.5	50	40	120

Cat No	D	C	L	M	L1	L2	C1	C2	C3	H	h
BT40-SFA6-155-M42	6	10	155	42	33	53	14.4	26	40	18	190
BT40-SFA6-180-M67	6	10	180	67	33	53	17	25	39	18	215
BT40-SFA6-210-M97	6	10	210	97	28	58	20.2	36	50	18	245
BT40-SFA6-240-M127	6	10	240	127	28	58	23.3	36	50	18	275
BT40-SFA6-270-M157	6	10	270	157	28	58	26..5	36	50	18	305
BT40-SFA8-155-M42	8	13	155	42	30	56	17.4	32	46	24	190
BT40-SFA8-180-M67	8	13	180	67	28	58	20	36	50	24	215
BT40-SFA8-210-M97	8	13	210	97	28	58	23.2	36	50	24	245
BT40-SFA8-240-MI 27	8	13	240	127	28	58	26.3	36	50	24	275
BT40-SFA8-270-M157	8	13	270	157	28	58	29.5	42	53	24	305
BT40-SFA10-155-M42	10	16	155	42	28	58	20.4	36	50	30	190
BT40-SFA10-180-M67	10	16	180	67	28	58	23	36	50	30	215
BT40-SFA10-210-M97	10	16	210	97	28	58	26.2	36	50	30	245
BT40-SFA12-155-M42	12	19	155	42	28	58	23.4	36	50	30	190
BT40-SFA12-180-M67	12	19	180	67	28	58	26	36	50	30	215
BT40-SFA20-155-M42	20	29	155	42	28	58	33.4	42	53	40	120

Cat No	D	C	L	M	L1	C1	C2	H	h
BT40-SFR 6-75-M22	6	14	75	22	26	16.3	32	18	110
BT40-SFR 6-95-M42	6	14	95	42	26	18.4	32	18	130
BT40-SFR 6-105-M22	6	14	105	22	56	16.3	36	18	140
BT40-SFR 6-120-M67	6	14	120	67	26	21	32	18	155
BT40-SFR 6-125-M42	6	14	125	42	56	18.4	32	18	160
BT40-SFR 6-150-M67	6	14	150	67	56	21	32	18	185
BT40-SFR 8-75-M22	8	18	75	22	26	20.3	32	24	110
BT40-SFR 8-95-M42	8	18	95	42	26	22.4	36	24	130
BT40-SFR 8-105-M22	8	18	105	22	56	20.3	36	24	140
BT40-SFR 8-120-M67	8	18	120	67	26	25	36	24	155
BT40-SFR 8-125-M42	8	18	125	42	56	22.4	36	24	160
BT40-SFR 8-150-M67	8	18	150	67	56	25	36	24	185
BT40-SFR 10-75-M22	10	22	75	22	26	24.3	32	30	110
BT40-SFR 10-95-M42	10	22	95	42	26	26.4	32	30	130
BT40-SFR 10-105-M22	10	22	105	22	56	24.3	32	30	140
BT40-SFR 10-120-M67	10	22	120	67	26	29	36	30	155
BT40-SFR 10-125-M42	10	22	125	42	56	26.4	36	30	160
BT40-SFR 10-150-M67	10	22	150	67	56	29	38	30	185

HSK-A 热缩刀柄3度，薄壁C型
HSK-A Shrink chuck 3°slim form C



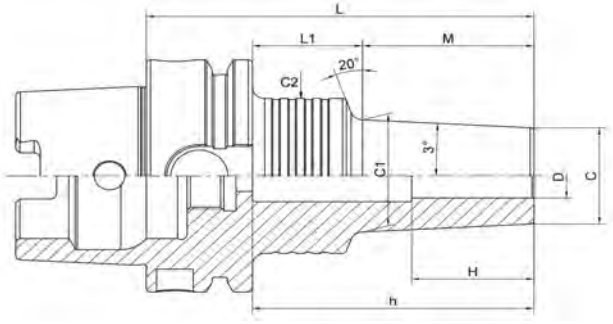

Cat No	D	C	L	M	L1	C1	C2	H	h
HSK40A-SFA3-65-M22	3	6	65	22	23	8.3	25	9	44
HSK40A-SFA3-85-M42	3	6	85	42	23	10.4	25	9	64
HSK40A-SFA3-100-M42	3	6	100	42	38	10.4	25	9	78
HSK40A-SFA4-65-M22	4	7	65	22	23	9.3	25	12	44
HSK40A-SFA4-85-M42	4	7	85	42	23	11.4	25	12	64
HSK40A-SFA4-100-M42	4	7	100	42	38	11.4	25	12	78
HSK40A-SFA6-65-M22	6	9	65	22	23	11.3	25	18	36
HSK40A-SFA6-85-M42	6	9	85	42	23	13.4	25	18	36
HSK40A-SFA6-100-M42	6	9	100	42	38	13.4	25	18	36
HSK40A-SFA8-65-M22	8	11	65	22	23	13.3	25	24	44
HSK40A-SFA8-85-M42	8	11	85	42	23	15.4	25	24	48
HSK40A-SFA8-100-M42	8	11	100	42	38	15.4	25	24	48
HSK40A-SFA10-65-M22	10	13	65	22	23	15.3	25	30	44
HSK40A-SFA10-85-M42	10	13	85	42	23	17.4	25	30	60
HSK40A-SFA10-100-M42	10	13	100	42	38	17.4	25	30	60
HSK40A-SFA12-65-M22	12	15	65	22	23	17.3	25	30	44
HSK40A-SFA12-90-M42	12	15	90	42	28	19.4	32	30	68
HSK50A-SFA3-95-M42	3	6	95	42	27	10.4	25	9	69
HSK50A-SFA3-125-M42	3	6	125	42	57	10.4	25	9	100
HSK50A-SFA4-95-M42	4	7	95	42	27	11.4	26	12	69
HSK50A-SFA4-125-M42	4	7	125	42	57	11.4	25	12	100
HSK50A-SFA6-95-M42	6	9	95	42	27	13.4	26	18	69
HSK50A-SFA6-125-M42	6	9	125	42	57	13.4	25	18	100
HSK50A-SFA8-95-M42	8	11	95	42	27	15.4	25	24	48
HSK50A-SFA8-125-M42	8	11	125	42	57	15.4	25	24	48
HSK50A-SFA10-95-M42	10	13	95	42	27	17.4	25	30	60
HSK50A-SFA10-125-M42	10	13	125	42	57	17.4	25	30	60
HSK63A-SFA4-95-M42	4	7	95	42	27	11.4	25	12	70
HSK63A-SFA4-120-M67	4	7	120	67	27	14	25	12	95
HSK63A-SFA4-125-M42	4	7	125	42	57	11.4	25	12	100
HSK63A-SFA4-150-M67	4	7	150	67	57	14	25	12	125
HSK63A-SFA4-150-M97	4	7	150	97	27	17.2	25	12	125
HSK63A-SFA4-180-M97	4	7	180	97	57	17.2	26	12	155
HSK63A-SFA6-95-M42	6	9	95	42	27	13.4	25	18	70
HSK63A-SFA6-120-M67	6	9	120	67	27	16	25	18	95
HSK63A-SFA6-125-M42	6	9	125	42	57	13.4	25	18	100
HSK63A-SFA6-150-M67	6	9	150	67	57	16	26	18	125
HSK63A-SFA6-150-M97	6	9	150	97	27	19.2	32	18	125
HSK63A-SFA6-180-M97	6	9	180	97	57	19.2	36	18	155
HSK63A-SFA8-95-M42	8	11	95	42	27	15.4	36	24	70
HSK63A-SFA8-120-M67	8	11	120	67	27	18	36	24	95
HSK63A-SFA8-125-M42	8	11	125	42	57	15.4	36	24	100
HSK63A-SFA8-150-M67	8	11	150	67	57	18	36	24	125
HSK63A-SFA8-150-M97	8	11	150	97	27	21.2	36	24	125
HSK63A-SFA8-180-M97	8	11	180	97	57	21.2	36	24	155
HSK63A-SFA10-95-M42	10	13	95	42	27	17.4	36	30	60
HSK63A-SFA10-120-M67	10	13	120	67	27	20	36	30	60
HSK63A-SFA10-125-M42	10	13	125	42	57	17.4	36	30	60
HSK63A-SFA10-150-M67	10	13	150	67	57	20	36	30	60
HSK63A-SFA10-150-M97	10	13	150	97	27	23.2	36	30	60
HSK63A-SFA10-180-M97	10	13	180	97	57	23.2	36	30	60
HSK63A-SFA12-95-M42	12	15	95	42	27	19.4	36	30	68
HSK63A-SFA12-120-M67	12	15	120	67	27	22	36	30	72
HSK63A-SFA12-125-M42	12	15	125	42	57	19.4	36	30	72
HSK63A-SFA12-150-M67	12	15	150	67	57	22	32	30	72
HSK63A-SFA12-150-M97	12	15	150	97	27	25.2	36	30	72
HSK63A-SFA12-180-M97	12	15	180	97	57	25.2	36	30	72

Cat No	D	C	L	M	L1	L2	C1	C2	C3	H	h
HSK63A-SFA4-155-M42	4	7	155	42	33	54	11.4	25	39	12	130
HSK63A-SFA4-180-M67	4	7	180	67	33	54	14	26	40	12	155
HSK63A-SFA4-210-M97	4	7	210	97	33	54	17.2	25	39	12	185
HSK63A-SFA6-155-M42	6	9	155	42	33	54	13.4	25	39	18	130
HSK63A-SFA6-180-M67	6	9	180	67	33	54	16	26	40	18	155
HSK63A-SFA6-210-M97	6	9	210	97	28	59	19.2	36	50	18	185
HSK63A-SFA8-155-M42	8	11	155	42	33	54	15.4	25	39	24	130
HSK63A-SFA8-180-M67	8	11	180	67	30	57	18	32	46	24	155
HSK63A-SFA8-210-M97	8	11	210	97	28	59	21.2	36	50	24	185
HSK63A-SFA10-155-M42	10	13	155	42	33	54	17.4	25	39	30	60
HSK63A-SFA10-180-M67	10	13	180	67	30	57	20	32	46	30	60
HSK63A-SFA10-210-M97	10	13	210	97	30	57	23.2	32	46	30	60
HSK63A-SFA12-155-M42	12	15	155	42	30	57	19.4	32	46	30	72
HSK63A-SFA12-180-M67	12	15	180	67	30	57	22	32	46	30	72
HSK63A-SFA12-210-M97	12	15	210	97	30	57	25.2	32	46	30	72

Cat No	D	C	L	M	L1	L2	C1	C2	C3	H	h
HSK100A-SFA4-110-M42	4	7	110	42	39	-	11.4	26	-	12	80
HSK100A-SFA4-135-M67	4	7	135	67	39	-	14	26	-	12	105
HSK100A-SFA4-165-M67	4	7	165	67	69	-	14	26	-	12	135
HSK100A-SFA4-165-M97	4	7	165	97	39	-	17.2	26	-	12	135
HSK100A-SFA4-195-M97	4	7	195	97	69	-	17.2	25	-	12	165
HSK100A-SFA6-110-M42	6	9	110	42	39	-	13.4	25	-	18	80
HSK100A-SFA6-135-M67	6	9	135	67	39	-	16	25	-	18	105
HSK100A-SFA6-140-M42	6	9	140	42	69	-	13.4	25	-	18	110
HSK100A-SFA6-165-M67	6	9	165	67	69	-	16	25	-	18	135
HSK100A-SFA6-165-M97	6	9	165	97	39	-	19.2	36	-	18	135
HSK100A-SFA6-195-M97	6	9	195	97	69	-	19.2	36	-	18	165

Cat No	D	C	L	M	L1	C1	C2	H	h
HSK100A-SFA8-110-M42	8	11	110	42	39	15.4	36	24	80
HSK100A-SFA8-135-M67	8	11	135	67	39	18	32	24	105
HSK100A-SFA8-140-M42	8	11	140	42	69	15.4	36	24	110
HSK100A-SFA8-165-M67	8	11	165	67	69	18	36	24	135
HSK100A-SFA8-165-M97	8	11	165	97	39	21.2	36	24	135
HSK100A-SFSC-195-M97	8	11	195	97	69	21.2	32	24	165
HSK100A-SFA10-110-M42	10	13	110	42	39	17.4	25	30	80
HSK100A-SFA10-135-M67	10	13	135	67	39	20	36	30	105
HSK100A-SFA10-140-M42	10	13	140	42	69	17.4	25	30	110
HSK100A-SFA10-165-M67	10	13	165	67	69	20	36	30	135
HSK100A-SFA10-165-M97	10	13	165	97	39	23.2	36	30	135
HSK100A-SFA10-195-M97	10	13	195	97	69	23.2	36	30	165
HSK100A-SFA12-110-M42	12	15	110	42	39	19.4	32	30	72
HSK100A-SFA12-135-M67	12	15	135	67	39	22	32	30	72
HSK100A-SFA12-140-M42	12	15	140	42	69	19.4	32	30	72
HSK100A-SFA12-165-M67	12	15	165	67	69	22	32	30	72
HSK100A-SFA12-165-M97	12	15	165	97	39	25.2	36	30	72
HSK100A-SFA12-195-M97	12	15	195	97	69	25.2	36	30	72

Cat No	D	C	L	M	L1	L2	C1	C2	C3	H	h
HSK100A-SFA4-170-M42	4	7	170	42	33	66	11.4	26	40	12	140
HSK100A-SFA4-195-M67	4	7	195	67	33	66	14	25	39	12	165
HSK100A-SFA4-225-M97	4	7	225	97	33	66	17.2	25	39	12	195
HSK100A-SFA6-170-M42	6	9	170	42	33	66	13.4	25	39	18	140
HSK100A-SFA6-195-M67	6	9	195	67	33	66	16	26	40	18	165
HSK100A-SFA6-225-M97	6	9	225	97	30	69	19.2	32	46	18	195
HSK100A-SFA8-170-M42	8	11	170	42	28	71	15.4	36	50	24	140
HSK100A-SFA8-195-M67	8	11	195	67	28	71	18	36	50	24	165
HSK100A-SFA8-225-M97	8	11	225	97	28	71	21.2	36	50	24	195
HSK100A-SFA10-170-M42	10	13	170	42	28	71	17.4	36	50	30	140
HSK100A-SFA0-195-M67	10	13	195	67	28	71	20	36	50	30	165
HSK100A-SFA10-225-M97	10	13	225	97	30	69	23.2	32	46	30	195
HSK100A-SFA12-170-M42	12	15	170	42	28	71	19.4	36	50	30	72
HSK100A-SFA12-195-M67	12	15	195	67	30	69	22	32	46	30	72
HSK100A-SFA12-225-M97	12	15	225	97	28	71	25.2	36	50	30	72

HSK-E 热缩刀柄3度，薄壁C型
HSK-E Shrink chuck 3° slim form C



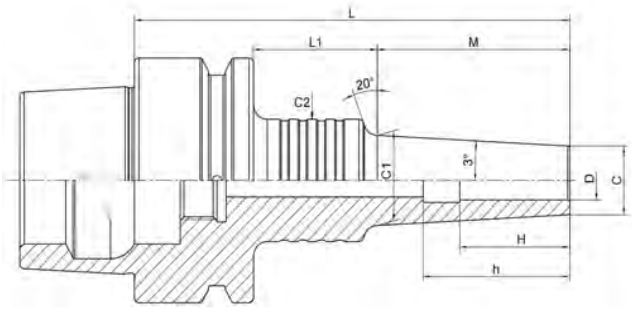

Cat No	D	C	L	M	L1	C1	C2	H	h
HSK32E-SFA3-50-M22	3	6	50	22	8	8.3	20	9	42
HSK32E-SFA3-70-M42	3	6	70	42	8	10.4	20	9	62
HSK32E-SFA3-85-M42	3	6	85	42	23	10.4	25	9	69
HSK32E-SFASA4-50-M22	4	7	50	22	8	9.3	20	12	35
HSK32E-SFA4-70-M42	4	7	70	42	8	11.4	20	12	54
HSK32E-SFA4-85-M42	4	7	85	42	23	11.4	25	12	69
HSK32E-SFA6-70-M42	6	9	70	42	8	13.4	20	18	54
HSK40E-SFA3-50-M22	3	6	50	22	8	8.3	20	9	42
HSK40E-SFA3-70-M42	3	6	70	42	8	10.4	20	9	62
HSK40E-SFA3-85-M42	3	6	85	42	23	10.4	25	9	69
HSK40E-SFA3-110-M67	3	6	110	67	23	13	25	9	94
HSK40E-SFA4-50-M22	4	7	50	22	8	9.3	20	12	42
HSK40E-SFA4-70-M42	4	7	70	42	8	11.4	20	12	62
HSK40E-SFA4-85-M42	4	7	85	42	23	11.4	25	12	74
HSK40E-SFA4-110-M67	4	7	110	67	23	14	25	12	88
HSK40E-SFA6-50-M22	6	9	50	22	8	11.3	20	18	36
HSK40E-SFA6-70-M42	6	9	70	42	8	13.4	20	18	36
HSK40E-SFA6-85-M42	6	9	85	42	23	13.4	25	18	36
HSK40E-SFA6-110-M67	6	9	110	67	23	16	25	18	36
HSK40E-SFA8-60-M22	8	11	60	22	18	13.3	26	24	48
HSK40E-SFA8-80-M42	8	11	80	42	18	15.4	26	24	48
HSK40E-SFA8-100-M42	8	11	100	42	38	15.4	25	24	48

Cat No	D	C	L	M	L1	C1	C2	H	h
HSK40E-SFA10-60-M22	10	13	60	22	18	15.3	26	30	49
HSK40E-SFA10-80-M42	10	13	80	42	18	17.4	26	30	60
HSK40E-SFA10-100-M42	10	13	100	42	38	17.4	25	30	60
HSK40E-SFA3-50-M22	3	7.5	50	22	8	9.8	20	9	42
HSK40E-SFA3-70-M42	3	7.5	70	42	8	11.9	20	9	62
HSK40E-SFA3-85-M42	3	7.5	85	42	23	11.9	25	9	69
HSK40E-SFA3-110-M67	3	7.5	110	67	23	14.5	25	9	94
HSK40E-SFA4-50-M22	4	10	50	22	8	12.3	20	12	42
HSK40E-SFA4-70-M42	4	10	70	42	8	14.4	20	12	62
HSK40E-SFA4-85-M42	4	10	85	42	23	14.4	25	12	69
HSK40E-SFA4-110-M67	4	10	110	67	23	17	25	12	94
HSK40E-SFA6-50-M22	6	12	50	22	8	14.3	26	18	36
HSK40E-SFA6-70-M42	6	12	70	42	8	16.4	26	18	36
HSK40E-SFA6-85-M42	6	12	85	42	23	16.4	25	18	36
HSK40E-SFA6-110-M67	6	12	110	67	23	19	25	18	36
HSK40E-SFA8-50-M22	8	14	50	22	8	16.3	26	20	48
HSK40E-SFA8-85-M42	8	14	85	42	23	18.4	25	24	48
HSK40E-SFA8-100-M42	8	14	100	42	38	18.4	25	24	48
HSK40E-SFA10-55-M22	10	16	55	22	13	18.3	26	25	60
HSK40E-SFA10-85-M42	10	16	85	42	23	20.4	25	30	60
HSK40E-SFA10-100-M42	10	16	100	42	38	20.4	25	30	60
HSK40E-SFA12-55-M22	12	20	55	22	13	22.3	30	25	44
HSK40E-SFA12-85-M42	12	20	85	42	23	24.4	32	30	72
HSK40E-SFA16-55-M22	16	26	55	22	13	28.3	34	32	44
HSK40E-SFA20-60-M40	20	32	60	40	-	34	-	38	49

Cat No	D	C	L	M	L1	C1	C2	H	h
HSK50E-SFA3-60-M22	3	6	60	22	12	8.3	20	9	50
HSK50E-SFA3-75-M22	3	6	75	22	27	8.3	25	9	61
HSK50E-SFA3-80-M42	3	6	80	42	12	10.4	20	9	70
HSK50E-SFA3-95-M42	3	6	95	42	27	10.4	25	9	81
HSK50E-SFA4-60-M22	4	7	60	22	12	9.3	20	12	50
HSK50E-SFA4-75-M22	4	7	75	22	27	9.3	25	12	61
HSK50E-SFA4-80-M42	4	7	80	42	12	11.4	20	12	70
HSK50E-SFA4-95-M42	4	7	95	42	27	11.4	25	12	85
HSK50E-SFA6-60-M22	6	9	60	22	12	11.3	20	18	42
HSK50E-SFA6-75-M22	6	9	75	22	27	11.3	25	18	61
HSK50E-SFA6-80-M42	6	9	80	42	12	13.4	20	18	62
HSK50E-SFA6-95-M42	6	9	95	42	27	13.4	25	18	81
HSK50E-SFA6-120-M67	6	9	120	67	27	16	25	18	106
HSK50E-SFA6-150-M97	6	9	150	97	27	19.2	32	18	135
HSK50E-SFA8-65-M22	8	11	65	22	17	13.3	26	24	39
HSK50E-SFA8-75-M22	8	11	75	22	27	15.4	25	24	48
HSK50E-SFA8-85-M42	8	11	85	42	17	15.4	26	24	48
HSK50E-SFA8-95-M42	8	11	95	42	27	15.4	25	24	48
HSK50E-SFA8-120-M67	8	11	120	67	27	18	32	24	48
HSK50E-SFA8-150-M97	8	11	150	97	27	21.2	32	24	48
HSK50E-SFA10-65-M22	10	13	65	22	17	15.3	26	30	39
HSK50E-SFA10-75-M22	10	13	75	22	27	15.3	25	30	49
HSK50E-SFA10-85-M42	10	13	85	42	17	17.4	26	30	59
HSK50E-SFA10-95-M42	10	13	95	42	27	17.4	25	30	60
HSK50E-SFA10- 120-M67	10	13	120	67	27	20	32	30	60
HSK50E-SFA10- 150-M97	10	13	150	97	27	23.2	32	30	60
HSK50E-SFA12-65-M22	12	15	65	22	17	17.3	26	25	39
HSK50E-SFA12-75-M22	12	15	75	22	27	17.3	25	30	49
HSK50E-SFA12-85-M42	12	15	85	42	17	19.4	26	30	59
HSK50E-SFA12-95-M42	12	15	95	42	27	19.4	32	30	69
HSK50E-SFA12- 120-M67	12	15	120	67	27	22	32	30	72

Cat No	D	C	L	M	L1	C1	C2	H	h
HSK50E-SFS6-95-M42	6	10	95	42	27	14.4	25	18	77
HSK50E-SFS6-120-M67	6	10	120	67	27	17	25	18	102
HSK50E-SFS6-150-M97	6	10	150	97	27	20.2	32	18	135
HSK50E-SFS8-95-M42	8	13	95	42	27	17.4	32	24	48
HSK50E-SFS8-120-M67	8	13	120	67	27	20	32	24	48
HSK50E-SFS8-150-M97	8	13	150	97	27	23.2	32	24	48
HSK50E-SFS10-95-M42	10	16	95	42	27	20.4	32	30	60
HSK50E-SFS10-120-M67	10	16	120	67	27	23	32	30	60
HSK50E-SFS10-150-M97	10	16	150	97	27	26.2	32	30	60
HSK50E-SFS12-95-M42	12	19	95	42	27	23.4	32	30	69
HSK50E-SFS12-120-M67	12	19	120	67	27	26	32	30	72
HSK50E-SFS12-150-M97	12	19	150	97	27	29.2	32	30	72
HSK50E-SFS16-95-M42	16	24	95	42	27	28.4	42	32	69
HSK50E-SFS16-120-M67	16	24	120	67	27	31	42	32	94
HSK50E-SFS20-95-M42	20	29	95	42	27	33.4	42	40	69

Cat No	D	C	L	M	L1	C1	C2	H	h
HSK32E-SFE3-70-M42	3	7.5	70	42	8	11.9	20	9	62
HSK32E-SFE3-85-M42	3	7.5	85	42	23	11.9	25	9	69
HSK32E-SFE4-50-M22	4	10	50	22	8	12.3	20	12	35
HSK32E-SFE4-70-M42	4	10	70	42	8	14.4	20	12	54
HSK32E-SFE4-85-M42	4	10	85	42	23	14.4	25	12	69
HSK32E-SFE6-50-M22	6	12	50	22	8	14.3	26	18	39
HSK32E-SFE6-70-M42	6	12	70	42	8	16.4	26	18	54
HSK32E-SFE6-85-M42	6	12	85	42	23	16.4	25	18	69
HSK32E-SFE8-50-M22	8	14	50	22	8	16.3	26	20	39
HSK32E-SFE8-85-M42	8	14	85	42	23	18.4	25	24	48
HSK32E-SFE10-55-M22	10	16	55	22	13	18.3	26	25	44
HSK32E-SFE12-55-M22	12	20	55	22	13	22.3	26	25	44
HSK32E-SFE16-55-M35	16	26	55	35	-	-	-	32	44
HSK40E-SFE3-50-M22	3	7.5	50	22	8	9.8	20	9	42
HSK40E-SFE3-70-M42	3	7.5	70	42	8	11.9	20	9	62
HSK40E-SFE3-85-M42	3	7.5	85	42	23	11.9	25	9	69
HSK40E-SFE3-110-M67	3	7.5	110	67	23	14.5	25	9	94
HSK40E-SFE4-50-M22	4	10	50	22	8	12.3	20	12	42
HSK40E-SFE4-70-M42	4	10	70	42	8	14.4	20	12	62
HSK40E-SFE4-85-M42	4	10	85	42	23	14.4	25	12	69
HSK40E-SFE4-110-M67	4	10	110	67	23	17	25	12	94
HSK40E-SFE6-50-M22	6	12	50	22	8	14.3	26	18	36
HSK40E-SFE6-70-M42	6	12	70	42	8	16.4	26	18	36
HSK40E-SFE6-85-M42	6	12	85	42	23	16.4	25	18	36
HSK40E-SFE6-110-M67	6	12	110	67	23	19	25	18	36

Cat No	D	C	L	M	L1	C1	C2	H	h
HSK40E-SFE(I)8-50-M22	8	14	50	22	8	16.3	26	20	48
HSK40E-SFE(I)8-85-M42	8	14	85	42	23	18.4	25	24	48
HSK40E-SFE(I)8-100-M42	8	14	100	42	38	18.4	25	24	48
HSK40E-SFE(I)10-55-M22	10	16	55	22	13	18.3	26	25	60
HSK40E-SFE(I)10-85-M42	10	16	85	42	23	20.4	25	30	60
HSK40E-SFE(I)10-100-M42	10	16	100	42	38	20.4	25	30	60
HSK40E-SFE(I)12-55-M22	12	20	55	22	13	22.3	30	25	44
HSK40E-SFE(I)12-85-M42	12	20	85	42	23	24.4	32	30	72
HSK40E-SFE(I)16-55-M22	16	26	55	22	13	28.3	34	32	44
HSK40E-SFE(I)20-60-M40	20	32	60	40	-	34	-	38	49
HSK50E-SFE(I)3-75-M22	3	7.5	75	22	27	9.8	25	9	61
HSK50E-SFE(I)3-95-M42	3	7.5	95	42	27	11.9	25	9	81
HSK50E-SFE(I)3-120-M67	3	7.5	120	67	27	14.5	25	9	106
HSK50E-SFE(I)3-150-M97	3	7.5	150	97	27	17.7	25	9	136
HSK50E-SFE(I)4-75-M22	4	10	75	22	27	12.3	25	12	61
HSK50E-SFE(I)4-95-M42	4	10	95	42	27	14.4	25	12	81
HSK50E-SFE(I)4-120-M67	4	10	120	67	27	17	25	12	106
HSK50E-SFE(I)4-150-M97	4	10	150	97	27	20.2	25	12	135
HSK50E-SFE(I)6-60-M22	6	12	60	22	12	14.3	26	18	44
HSK50E-SFE(I)6-75-M22	6	12	75	22	27	14.3	25	18	61
HSK50E-SFE(I)6-95-M42	6	12	95	42	27	16.4	25	18	81
HSK50E-SFE(I)6-120-M67	6	12	120	67	27	19	25	18	106
HSK50E-SFE(I)8-60-M22	8	14	60	22	12	16.3	26	20	34
HSK50E-SFE(I)8-75-M22	8	14	75	22	27	16.3	25	24	48
HSK50E-SFE(I)8-95-M42	8	14	95	42	27	18.4	25	24	48
HSK50E-SFE(I)10-60-M22	10	16	60	22	12	18.3	26	25	34
HSK50E-SFE(I)10-75-M22	10	16	75	22	27	18.3	25	30	49
HSK50E-SFE(I)12-60-M22	12	20	60	22	12	22.3	26	25	34
HSK50E-SFE(I)12-75-M22	12	20	75	22	27	22.3	25	30	49
HSK50E-SFE(I)16-60-M22	16	26	60	22	12	28.3	34	32	34
HSK50E-SFE(I)20-65-M22	20	32	65	22	17	34.3	40	38	39

Cat No	D	C	L	M	L1	C1	C2	H	h
HSK63F-SFE3-70-M22	3	7.5	70	22	22	9.8	26	9	53
HSK63F-SFE3-75-M22	3	7.5	75	22	27	9.8	25	9	54
HSK63F-SFE3-95-M42	3	7.5	95	42	27	11.9	25	9	78
HSK63F-SFE4-70-M22	4	10	70	22	22	12.3	26	12	53
HSK63F-SFE4-75-M22	4	10	75	22	27	12.3	25	12	58
HSK63F-SFE4-95-M42	4	10	95	42	27	14.4	25	12	73
HSK63F-SFE6-70-M22	6	12	70	22	22	14.3	26	18	36
HSK63F-SFE6-75-M22	6	12	75	22	27	14.3	25	18	36
HSK63F-SFE6-95-M42	6	12	95	42	27	16.4	25	18	36
HSK63F-SFE8-70-M22	8	14	70	22	22	16.3	26	24	44
HSK63F-SFE8-75-M22	8	14	75	22	27	16.3	25	24	48
HSK63F-SFE8-95-M42	8	14	95	42	27	18.4	25	24	48
HSK63F-SFE10-70-M22	10	16	70	22	22	18.3	26	30	44
HSK63F-SFE10-75-M22	10	16	75	22	27	18.3	25	30	49
HSK63F-SFE12-70-M22	12	20	70	22	22	22.3	26	30	44
HSK63F-SFE12-75-M22	12	20	75	22	27	22.3	25	30	49

HSK-F 热缩刀柄3度，薄壁C型
HSK-F Shrink chuck 3°slim form C



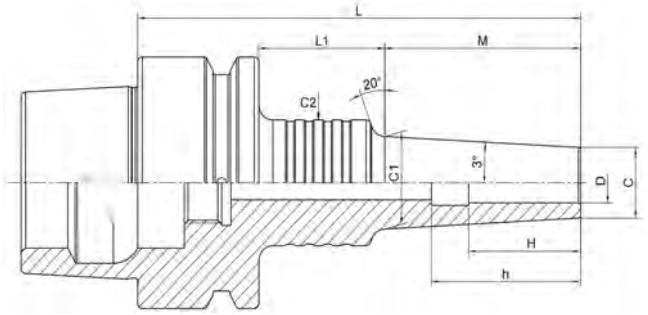

Cat No	D	C	L	M	L1	C1	C2	H	h
HSK63F-SFA3-75-M37	3	6	75	37	12	9.9	26	9	58
HSK63F-SFA3-95-M42	3	6	95	42	27	10.4	25	9	73
HSK63F-SFA4-75-M37	4	7	75	37	12	10.9	26	12	58
HSK63F-SFA4-95-M42	4	7	95	42	27	11.4	25	12	78
HSK63F-SFA6-75-M37	6	9	75	37	12	12.9	26	18	36
HSK63F-SFA6-95-M42	6	9	95	42	27	13.4	25	18	36
HSK63F-SFA8-95-M42	8	11	95	42	27	15.4	25	24	48
HSK63F-SFA10-95-M42	10	13	95	42	27	17.4	25	30	60
HSK63F-SFA12-95-M42	12	15	95	42	27	19.4	32	30	72

角度头
ANGLE HEADS

角度头使用说明详解

侧铣头安装示意图

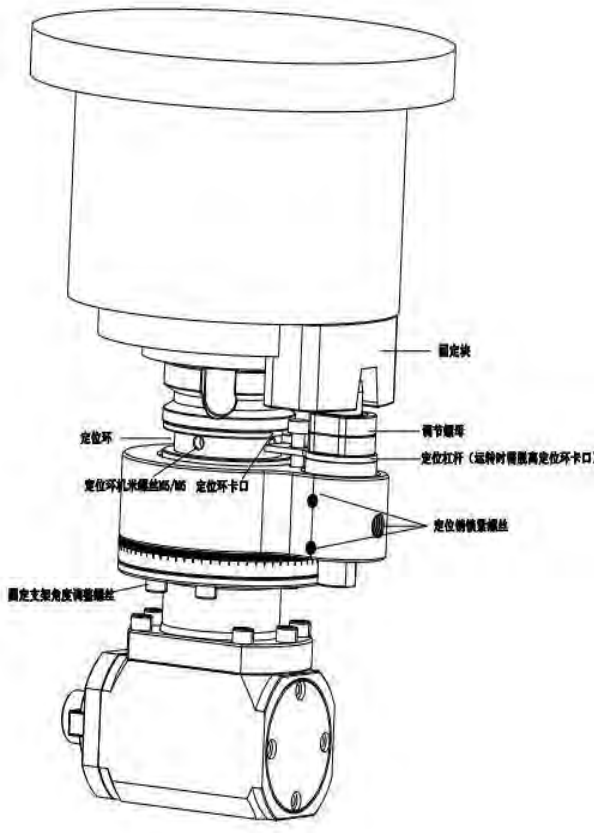

侧铣头零部件目录

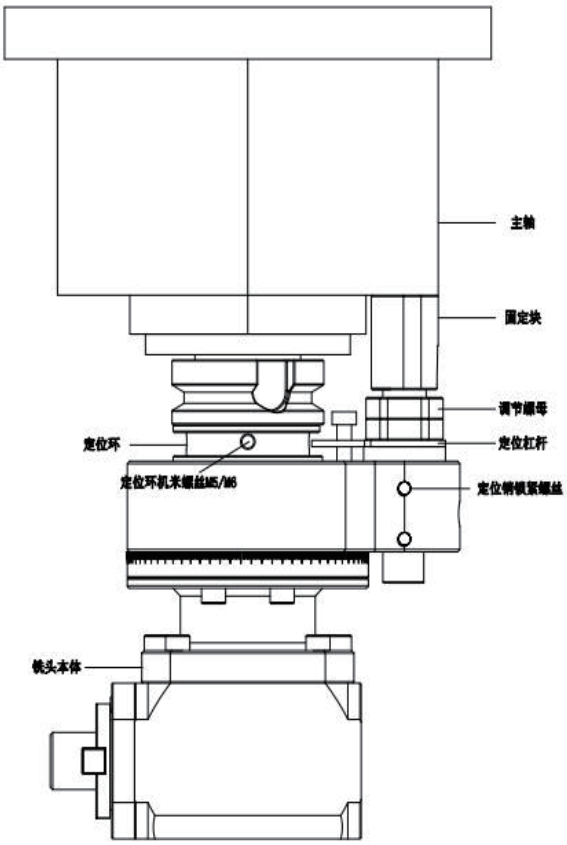

AGH 90　90度角度头
AGH90　Angle head

输入接口有以下形式可以选择

The input interface has the following types for selection.





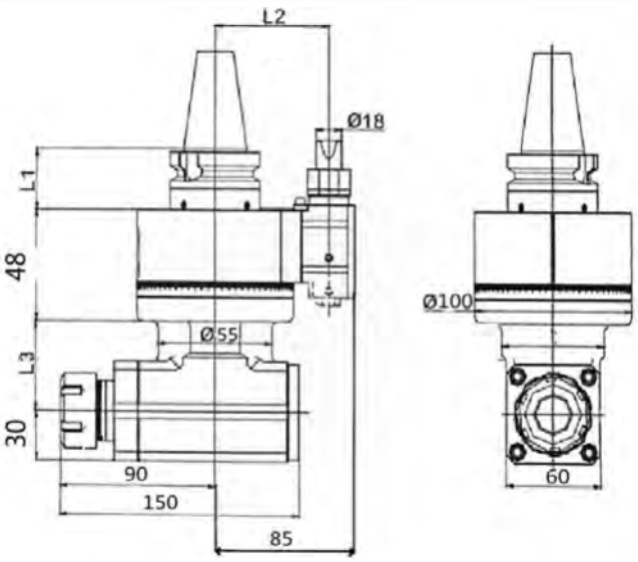

型号Cat No	输出形式Taper	L1	L2	L3	最大功率/KW	最高转速/RPM max	最大扭矩/Nm max	减速比/Rotation
AG90-BT30-ER16A	ER16A	43	65	62/132	3KW	3500RPM	32NM	1:1
AG90-BT30-ER 20A	ER20A	43	65	62/132	3KW	3500RPM	32NM	1:1
AG90-BT30-ER25UM	ER25UM	43	65	62/132	3KW	3500RPM	32NM	1:1
AG90-BT30-ER32UM	ER32UM	43	65	62/132	3KW	3500RPM	32NM	1:1
AG90-BT30-FMB22	FMB22	43	65	62/132	3KW	3500RPM	32NM	1:1
AG90-BT30-FMB27	FMB27	43	65	62/132	3KW	3500RPM	32NM	1:1
AG90-BT40-ER164	ER16A	43	65	62/132	3KW	3500RPM	32NM	1:1
AG90-BT40-ER20A	ER20A	43	65	62/132	3KW	3500RPM	32NM	1:1
AG90-BT40-ER25UM	ER25UM	43	65	62/132	3KW	3500RPM	32NM	1:1
AG90-BT40-ER32UM	ER32UM	43	65	62/132	3KW	3500RPM	32NM	1:1
AG90-BT40-ER40UM	ER40UM	43	65	62/132	3KW	3500RPM	32NM	1:1
AG90-BT40-FMB22	FM622	43	65	62/132	3KW	3500RPM	32NM	1:1
AG90-BT40-FMB27	FMB27	43	65	62/132	3KW	3500RPM	32NM	1:1
AG90-BT50-ER16A	ER16A	43	80/110	62/132	3KW	3500RPM	32NM	1:1
AG90-BT50-ER20A	ER20A	43	80/110	62/132	3KW	3500RPM	32NM	1:1
AG90-BT50-ER25UM	ER25UM	43	80/110	62/132	3KW	3500RPM	32NM	1:1
AG90-BT50-ER32UM	ER32UM	43	80/110	62/132	3KW	3500RPM	32NM	1:1
AG90-BT50-ER40UM	ER40UM	43	80/110	62/132	3KW	3500RPM	32NM	1:1
AG90-BT50-FMB22	FMB22	43	80/110	62/132	3KW	3500RPM	32NM	1:1
AG90-BT50-FMB27	FMB27	43	80/110	62/132	3KW	3500RPM	32NM	1:1

AGH 90×2 90度角度头
AGH90×2 Angle head



输入接口有以下形式可以选择

The input interface has the following types for selection.

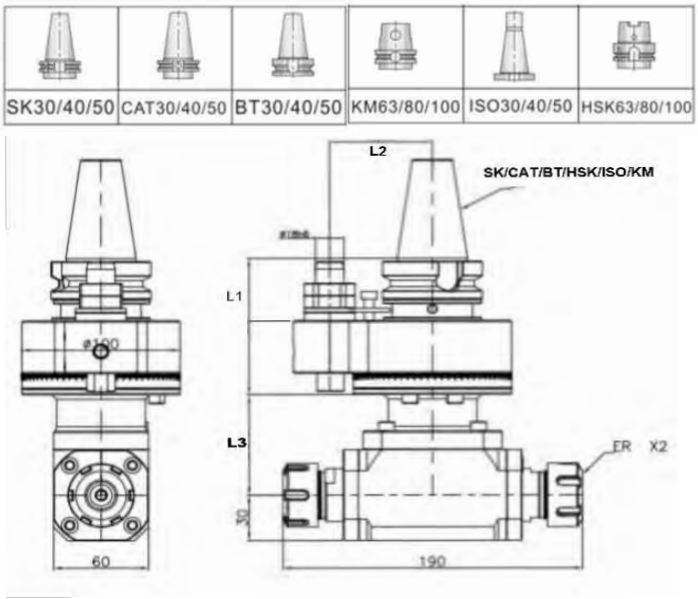

型号Cat No	输出形式Taper	L1	L2	L3	最大功率/KW	最高转速/RPM max	最大扭矩/Nm max	减速比/Rotation
2AG90-BT30-ER16A	ER16A	43	65	62/132	3KW	3500RPM	32NM	1:1
2AG90-BT30-ER 20A	ER20A	43	65	62/132	3KW	3500RPM	32NM	1:1
2AG90-BT30-ER25UM	ER25UM	43	65	62/132	3KW	3500RPM	32NM	1:1
2AG90-BT30-ER32UM	ER32UM	43	65	62/132	3KW	3500RPM	32NM	1:1
2AG90-BT30-FMB22	FMB22	43	65	62/132	3KW	3500RPM	32NM	1:1
2AG90-BT30-FMB27	FMB27	43	65	62/132	3KW	3500RPM	32NM	1:1
2AG90-BT40-ER164	ER16A	43	65	62/132	3KW	3500RPM	32NM	1:1
2AG90-BT40-ER20A	ER20A	43	65	62/132	3KW	3500RPM	32NM	1:1
2AG90-BT40-ER25UM	ER25UM	43	65	62/132	3KW	3500RPM	32NM	1:1
2AG90-BT40-ER32UM	ER32UM	43	65	62/132	3KW	3500RPM	32NM	1:1
2AG90-BT40-ER40UM	ER40UM	43	65	62/132	3KW	3500RPM	32NM	1:1
2AG90-BT40-FMB22	FM622	43	65	62/132	3KW	3500RPM	32NM	1:1
2AG90-BT40-FMB27	FMB27	43	65	62/132	3KW	3500RPM	32NM	1:1
2AG90-BT50-ER16A	ER16A	43	80/110	62/132	3KW	3500RPM	32NM	1:1
2AG90-BT50-ER20A	ER20A	43	80/110	62/132	3KW	3500RPM	32NM	1:1
2AG90-BT50-ER25UM	ER25UM	43	80/110	62/132	3KW	3500RPM	32NM	1:1
2AG90-BT50-ER32UM	ER32UM	43	80/110	62/132	3KW	3500RPM	32NM	1:1
2AG90-BT50-ER40UM	ER40UM	43	80/110	62/132	3KW	3500RPM	32NM	1:1
2AG90-BT50-FMB22	FMB22	43	80/110	62/132	3KW	3500RPM	32NM	1:1
2AG90-BT50-FMB27	FMB27	43	80/110	62/132	3KW	3500RPM	32NM	1:1

万向度角度头
Universal Angle head



输入接口有以下形式可以选择

The input interface has the following types for selection.

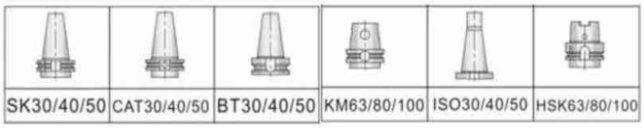

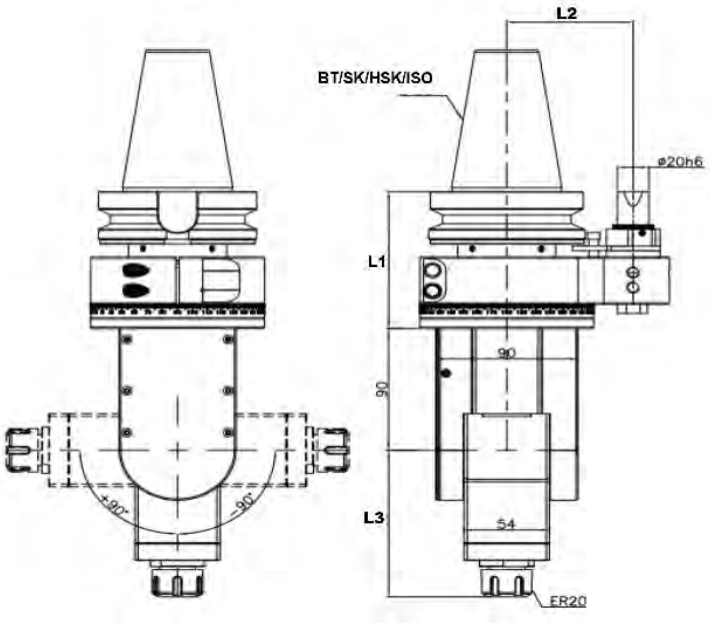

型号Cat No	输出形式Taper	L1	L2	L3	最大功率/KW	最高转速/RPM max	最大扭矩/Nm max	减速比/Rotation
WX-BT40-ER25	ER25	88	65	118	3KW	3500RPM	35NM	1:1
WX-BT40-ER32	ER32	88	65	118	3KW	3500RPM	35NM	1:1
WX-BT50-ER25	ER25	101	80	118	3KW	3500RPM	35NM	1:1
WX-BT50-ER32	ER32	101	80	118	3KW	3500RPM	35NM	1:1



BT–C 强力套装刀柄
BT–C Multi lock milling chuck of whole set

弹性夹头配套

型号 Cat. No	弹性夹头配套	扳手 Wrench
BT40–C32–105	6,8,10,12,16,20,25	C32
BT50–C32–110	6,8,10,12,16,20,25	C32
BT50–C42–115	6,8,10,12,16,20,25,32	C42

NT–C 强力套装刀柄
NT–C Multi lock milling chuck of whole set

型号 Cat. No	弹性夹头配套	扳手 Wrench
NT40–C32–105	6,8,10,12,16,20,25	C32
NT50–C32–110	6,8,10,12,16,20,25	C32
NT50–C42–115	6,8,10,12,16,20,25,32	C42

DAT(JT) 强力套装刀柄
DAT(JT) Multi lock milling chuck of whole set

型号 Cat. No	弹性夹头配套	扳手 Wrench
DAT40–C32–105	6,8,10,12,16,20,25	C32
DAT50–C32–110	6,8,10,12,16,20,25	C32
DAT50–C42–115	6,8,10,12,16,20,25,32	C42

MT–APU 一体式钻夹头
MT–APU Integrated keyless drill chuck



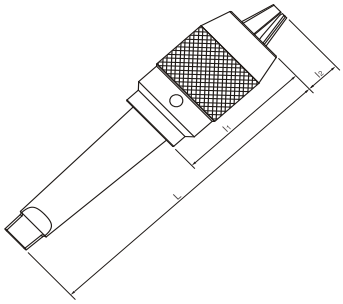

型号 Cat. No	L	l1	l2
MT3–APU13	179	80	10
MT3–APU16	184	85	12
MT4–APU16	207	85	12

扳手須另行購置 The spanner must purchase alone

C–APU 直接式钻夹头
C–APU Integrated keyless drill chuck



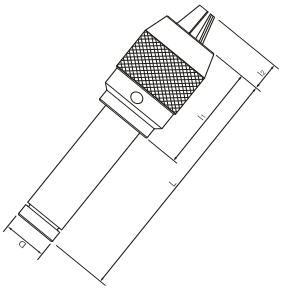

型号 Cat. No	D	L	l1	l2
C20–APU13	20	140	80	10
C20–APU16	20	150	80	10
C25–APU13	25	161	80	10
C25–APU16	25	165	80	12
C32–APU16	32	165	85	12

扳手須另行購置 The spanner must purchase alone

ER 螺帽
ER Clamping nut







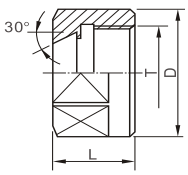

A 型
A Type

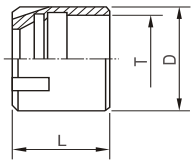

M 型
M Type

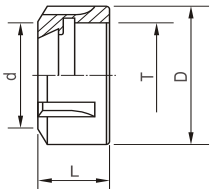

UM/RD Type

样式 Manner	型号 Cat. No	D	d	L	Wt（kg）
A	ER11A	19	17	11.3	0.005
	ER16A	28	21	18	0.01
	ER20A	34	25	19.5	0.05
M	ER8M	12	—	10.8	0.005
	ER11M	16	—	12	0.01
	ER16M	22	—	18	0.05
	ER20M	28	—	19	0.05
	ER25M	35	—	20	0.08
UM	ER25UM/RD	42	32	20	0.14
	ER32UM/RD	50	38.5	23.5	0.2
	ER40UM/RD	63	48.3	25.5	0.3
	ER50UM/RD	78	60	35	0.5

ER 延长杆(M/UM型)
ER Extension(M/UM type)



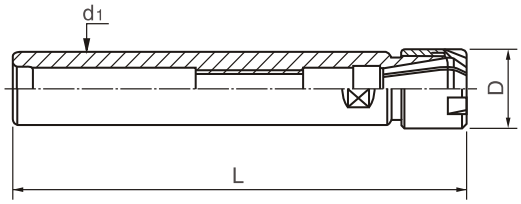



型号 Cat. No	L	D	d1	
C10–ER8M–100	100	12	10	
C10–ER8M–150	150	12	10	
C12–ER11M–100	100	16	12	
C12–ER11M–150	150	16	12	
C16–ER16M–100	100	22	16	
C16–ER16M–150	150	22	16	
C16–ER16M–200	200	22	16	
C20–ER16M–100	100	22	20	
C20–ER16M–150	150	22	20	
C20–ER16M–200	200	22	20	
C20–ER20M–100	100	28	20	
C20–ER20M–150	150	28	20	
C20–ER20M–200	200	28	20	
C20–ER25UM–120	120	42	20	
C20–ER25UM–150	150	42	20	
C32–ER25UM–120	120	42	32	
C32–ER25UM–150	150	42	32	
C32–ER32UM–100	100	50	32	
C32–ER32UM–150	150	50	32	

扳手须另行購置 The spanner must purchase alone

ER 延长杆（A型）
ER Extension(A type)



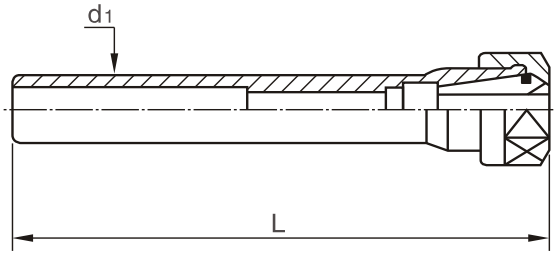

型号 Cat. No	L		d1	
C16–ER11A–100	100		16	
C16–ER11A–150	150			
C16–ER16A–100	100			
C16–ER16A–150	150			
C20–ER16A–100	100		20	
C20–ER16A–150	150			
C20–ER16A–200	200			
C20–ER20A–100	100			
C20–ER20A–150	150			
C20–ER20A–200	200			

扳手须另行購置 The spanner must purchase alone

ER 弹性筒夹
ER Spring collet

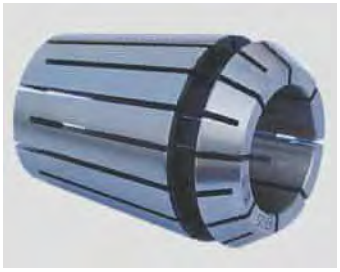



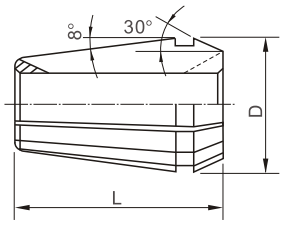

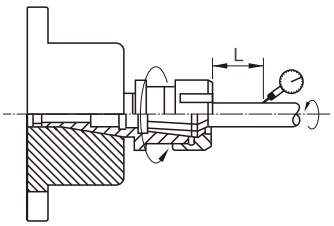

型号 Cat. No	D	L	RANGE
ER11	11.5	18	0.5
ER16	17	27.5	1.0
ER20	21	31.5	1.0
ER25	26	34	1.0
ER32	33	40	1.0
ER40	41	46	1.0

L mm	D mm	A 級	AA級	AAA 級
6	1.0–1.4	0.015	0.01	5μ
10	1.5–2.9	0.015		
16	3.0–5.9	0.015		
25	6.0–9.9	0.015		
40	10.0–17.9	0.02		
50	18.0–26.9	0.02		

ER11

型号 Cat. No	夹持
1.0	0.5 ~ 1.0
1.5	1.0 ~ 1.5
2.0	1.5 ~ 2.0
2.5	2.0 ~ 2.5
3.0	2.5 ~ 3.0
3.5	3.0 ~ 3.5
4.0	3.5 ~ 4.0
4.5	4.0 ~ 4.5
5.0	4.5 ~ 5.0
5.5	5.0 ~ 5.5
6.0	5.5 ~ 6.0
6.5	6.0 ~ 6.5
7.0	6.5 ~ 7.0

ER16

型号 Cat. No	夹持
1.0	0.5 ~ 1.0
2.0	1.0 ~ 2.0
3.0	2.0 ~ 3.0
4.0	3.0 ~ 4.0
5.0	4.0 ~ 5.0
6.0	5.0 ~ 6.0
7.0	6.0 ~ 7.0
8.0	7.0 ~ 8.0
9.0	8.0 ~ 9.0
10.0	9.0 ~ 10.0

ER20

型号 Cat. No	夹持
1.0	0.5 ~ 1.0
2.0	1.0 ~ 2.0
3.0	2.0 ~ 3.0
4.0	3.0 ~ 4.0
5.0	4.0 ~ 5.0
6.0	5.0 ~ 6.0
7.0	6.0 ~ 7.0
8.0	7.0 ~ 8.0
9.0	8.0 ~ 9.0
10.0	9.0 ~ 10.0
11.0	10.0 ~ 11.0
12.0	11.0 ~ 12.0
13.0	12.0 ~ 13.0

ER25

型号 Cat. No	夹持
1.0	0.5 ~ 1.0
2.0	1.0 ~ 2.0
3.0	2.0 ~ 3.0
4.0	3.0 ~ 4.0
5.0	4.0 ~ 5.0
6.0	5.0 ~ 6.0
7.0	6.0 ~ 7.0
8.0	7.0 ~ 8.0
9.0	8.0 ~ 9.0
10.0	9.0 ~ 10.0
11.0	10.0 ~ 11.0
12.0	11.0 ~ 12.0
13.0	12.0 ~ 13.0
14.0	13.0 ~ 14.0
15.0	14.0 ~ 15.0
16.0	15.0 ~ 16.0



ER32

型号 Cat. No	夹持
3.0	2.0 ~ 3.0
4.0	3.0 ~ 4.0
5.0	4.0 ~ 5.0
6.0	5.0 ~ 6.0
7.0	6.0 ~ 7.0
8.0	7.0 ~ 8.0
9.0	8.0 ~ 9.0
10.0	9.0 ~ 10.0
11.0	10.0 ~ 11.0
12.0	11.0 ~ 12.0
13.0	12.0 ~ 13.0
14.0	13.0 ~ 14.0
15.0	14.0 ~ 15.0
16.0	15.0 ~ 16.0
17.0	16.0 ~ 17.0
18.0	17.0 ~ 18.0
19.0	18.0 ~ 19.0
20.0	19.0 ~ 20.0

ER40

型号 Cat. No	夹持
6.0	5.0 ~ 6.0
7.0	6.0 ~ 7.0
8.0	7.0 ~ 8.0
9.0	8.0 ~ 9.0
10.0	9.0 ~ 10.0
11.0	10.0 ~ 11.0
12.0	11.0 ~ 12.0
13.0	12.0 ~ 13.0
14.0	13.0 ~ 14.0
15.0	14.0 ~ 15.0
16.0	15.0 ~ 16.0
17.0	16.0 ~ 17.0
18.0	17.0 ~ 18.0
19.0	18.0 ~ 19.0
20.0	19.0 ~ 20.0
21.0	20.0 ~ 21.0
22.0	21.0 ~ 22.0
23.0	22.0 ~ 23.0
24.0	23.0 ~ 24.0
25.0	24.0 ~ 25.0
26.0	25.0 ~ 26.0

SK 高速刀杆弹性筒夹
SK Spring collet fof high speed milling chuck



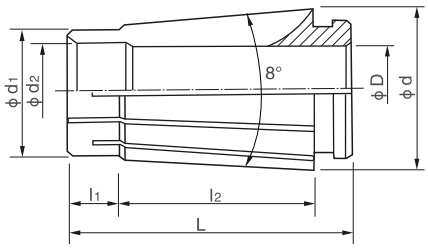

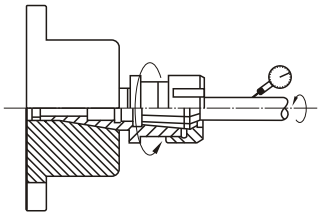

型号 Cat. No	d	d1	d2	L	L1	L2
SK6	10.5	7.5	5.8	25	4	17.4
SK10	15.5	12	9.8	30.5	5	21.3
SK16	24.6	18.8	15.75	45	8	32
SK25	35.6	28.9	25.4	57	8.5	43

A級	UP級
0.01	5μ

SK6

型号 Cat. No	夹持	d
0.8	0.7 ~ 0.8	10.4
1.0	0.9 ~ 1.0	
1.25	1.15 ~ 1.25	
1.5	1.3 ~ 1.5	
1.75	1.55 ~ 1.75	
2	1.8 ~ 2.0	
2.25	2.05 ~ 2.25	
2.5	2.3 ~ 2.5	
2.75	2.55 ~ 2.75	
3	2.8 ~ 3.0	
3.5	3.0 ~ 3.5	
4	3.5 ~ 4.0	
4.5	4.0 ~ 4.5	
5	4.5 ~ 5.0	
5.5	5.0 ~ 5.5	
6	5.5 ~ 6.0	

SK10

型号 Cat. No	夹持	d
2	1.75 ~ 2.0	15.6
2.25	2.0 ~ 2.25	
2.5	2.25 ~ 2.5	
2.75	2.5 ~ 2.75	
3	2.75 ~ 3.0	
3.5	3.0 ~ 3.5	
4	3.5 ~ 4.0	
4.5	4.0 ~ 4.5	
5	4.5 ~ 5.0	
5.5	5.0 ~ 5.5	
6	5.5 ~ 6.0	
6.5	6.0 ~ 6.5	
7	6.5 ~ 7.0	
7.5	7.0 ~ 7.5	
8	7.5 ~ 8.0	
8.5	8.0 ~ 8.5	
9	8.5 ~ 9.0	
9.5	9.0 ~ 9.5	
10	9.5 ~ 10.0	

SK16

型号 Cat. No	夹持	d
3	2.75 ~ 3.0	24.6
3.5	3.0 ~ 3.5	
4	3.5 ~ 4.0	
4.5	4.0 ~ 4.5	
5	4.5 ~ 5.0	
5.5	5.0 ~ 5.5	
6	5.5 ~ 6.0	
6.5	6.0 ~ 6.5	
7	6.5 ~ 7.0	
7.5	7.0 ~ 7.5	
8	7.5 ~ 8.0	
8.5	8.0 ~ 8.5	
9	8.5 ~ 9.0	
9.5	9.0 ~ 9.5	
10	9.5 ~ 10.0	
10.5	10.0 ~ 10.5	
11	10.5 ~ 11.0	
11.5	11.0 ~ 11.5	
12	11.5 ~ 12.0	
12.5	12.0 ~ 12.5	
13	12.5 ~ 13.0	
13.5	13.0 ~ 13.5	
14	13.5 ~ 14.0	
14.5	14.0 ~ 14.5	
15	14.5 ~ 15.0	
15.5	15.0 ~ 15.5	
16	15.5 ~ 16.0	

SK25

型号 Cat. No	夹持	d
16.5	16.0 ~ 16.5	35.7
17	16.5 ~ 17.0	
17.5	17.0 ~ 17.5	
18	17.5 ~ 18.0	
18.5	18.0 ~ 18.5	
19	18.5 ~ 19.0	
19.5	19.0 ~ 19.5	
20	19.5 ~ 20.0	
20.5	20.0 ~ 20.5	
21	20.5 ~ 21.0	
21.5	21.0 ~ 21.5	
22	21.5 ~ 22.0	
22.5	22.0 ~ 22.5	
23	22.5 ~ 23.0	
23.5	23.0 ~ 23.5	
24	23.5 ~ 24.0	
24.5	24.0 ~ 24.5	
25	24.5 ~ 25.0	
25.4	25.0 ~ 25.4	

C 直筒式弹性筒夹
Straight spring collet



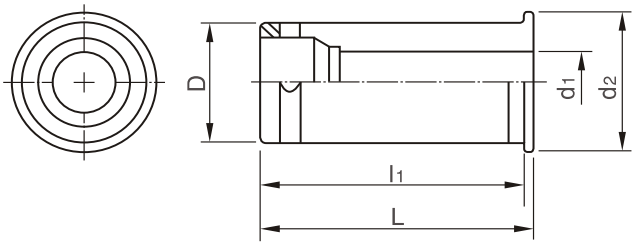

型号 Cat. No	D	d1	d2	L	l1
C20	20	6,8,10,12,15,15.6,16	25	52.50	49
C32	32	3,4,5,6,8,10,12,15,15.6,16,19,20,24,25	37.50	63	60.7
C42	42	6,8,10,12,15,15.6,16,19,20,24,25,32	47	80	77

OZ 弹性筒夹
OZ Spring collet



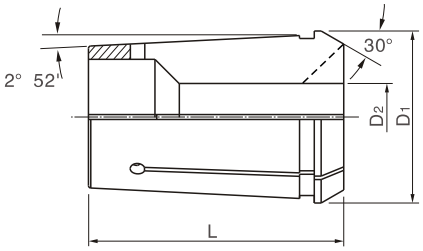

型号 Cat. No	D1	L	D2
OZ25	35.5	52	3,4,5,6,7,8,9,10,11,12,13,16,18,20,25
OZ32	44	60	6,7,8,9,10,11,12,13,14,15,16,17,18,19,20,21,22,23,24,25,26,27,28,29,30,31,32

R8 弹性筒夹
R8 Spring collet



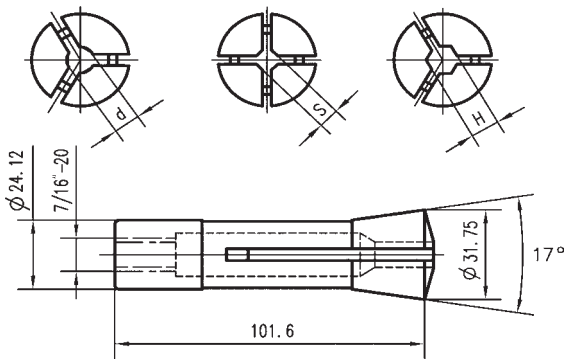

型号 Cat No.	型式 Type	夹持范围 Clamping range		重量 Wt(kg)
		mm	in	
R8—01—d	圆孔 Round	1～20	1/16～7/8	0.24
R8—02—S	四方孔 Square	3～13	1/8～1/2	0.24
R8—03—H	六方孔 Hex	3～16	1/8～5/8	0.24



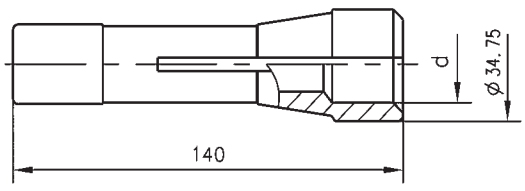

型号 Cat No.	d					重量 Wt(kg)
	in			mm		
R8—05—d	29/32	15/16	31/32	1	23 24 25	0.36

高精度液压刀柄筒夹
Hydraulic Chuck Collet



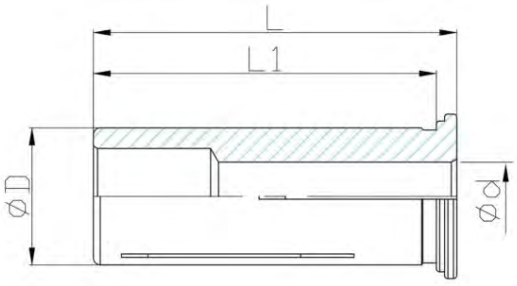

型号Cat.No	Φd	D	L	L1
HC12-3	3	12	47	45
HC12-4	4	12	47	45
HC12-5	5	12	47	45
HC12-6	6	12	47	45
HC12-7	7	12	47	45
HC12-8	8	12	47	45
HC12-9	9	12	47	45

型号Cat.No	Φd	D	L	L1
HC32-6	6	32	64.5	61
HC32-8	8	32	64.5	61
HC32-10	10	32	64.5	61
HC32-12	12	32	64.5	61
HC32-14	14	32	64.5	61
HC32-16	16	32	64.5	61
HC32-18	18	32	64.5	61
HC32-19	19	32	64.5	61
HC32-20	20	32	64.5	61
HC32-24	24	32	64.5	61
HC32-25	25	32	64.5	61

型号Cat.No	Φd	D	L	L1
HC20-3	3	20	53.5	50.5
HC20-4	8	20	53.5	50.5
HC20-5	10	20	53.5	50.5
HC20-6	12	20	53.5	50.5
HC20-7	14	20	53.5	50.5
HC20-8	16	20	53.5	50.5
HC20-9	18	20	53.5	50.5
HC20-10	10	20	53.5	50.5
HC20-11	11	20	53.5	50.5
HC20-12	12	20	53.5	50.5
HC20-13	13	20	53.5	50.5
HC20-14	14	20	53.5	50.5
HC20-15	15	20	53.5	50.5
HC20-16	16	20	53.5	50.5

5C 弹性筒夹
5C Spring collet



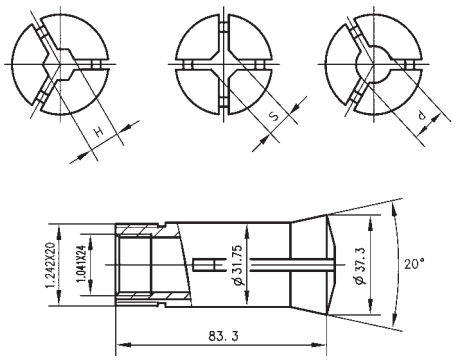

型号 Cat No.	型式 Type	夹持范围 Clamping range		重量 Wt(kg)
		mm	in	
5C—01—d	圆孔 Round	1～28	1/32～1—1/8	0.24
5C—02—S	四方孔 Square	3～19	1/8～3/4	0.24
5C—03—H	六方孔 Hex	3～22	1/8～7/8	0.24

NBD PRECISION TOOL

ER 止水筒夹
ER COOLANT COLLET



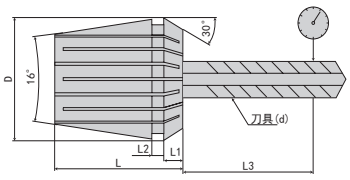

规格 / 型号 Model	d	D	D1	L	L1
ERS11	3-7	11	11.5	18	3.8
ERS16	3-6	16	17	27.5	6.26
	6-10	16	17	27.5	6.26
ERS20	3-6	20	21	31.5	6.36
	6-13	20	21	31.5	6.36
ERS25	3-6	25	26	34	6.66
	6-16	25	26	34	6.66
ERS32	3-8	32	33	40	7.16
	8-20	32	33	40	7.16
ERS40	4-10	40	41	46	7.66
	10-26	40	41	46	7.66
ERS50	12-34	50	52	60	12.6

ERS11		ERS16		ERS20		ERS25		ERS32		ERS40		ERS50	
规格 Type	夹持范围 Range	规格 Type	夹持范围 Range	规格 Type	夹持范围 Range	规格 Type	夹持范围 Range	规格 Type	夹持范围 Range	规格 Type	夹持范围 Range	规格 Type	夹持范围 Range
3S	3-2.9	3S	3-2.9	3S	3-2.9	3S	3-2.9	3S	3-2.9	4S	4-3.9	12S	12-11.5
4S	4-3.9	4S	4-3.9	4S	4-3.9	4S	4-3.9	4S	4-3.9	5S	5-4.9	14S	14-13.5
4.5S	4.5-4.4	4.5S	4.5-4.4	5S	5-4.9	5S	5-4.9	5S	5-4.9	6S	6-5.9	16S	16-15.5
5S	5-4.9	5S	5-4.9	5.5S	5.5-5.4	6S	6-5.5	6S	6-5.9	7S	7-6.9	16.5S	16.5-16
5.5S	5.5-5.4	5.5S	5.5-5.4	6S	6-5.5	6.5S	6.5-6	7S	7-6.9	8S	8-7.9	17S	17-16.5
6S	6-5.9	6S	6-5.5	6.5S	6.5-6	7S	7-6.5	8S	8-7.5	9S	9-8.9	17.5S	17.5-17
6.5S	6.5-6.4	6.5S	6.5-6	7S	7-6.5	7.5S	7.5-7	8.5S	8.5-8	10S	10-9.5	18S	18-17.5
7S	7-6.9	7S	7-6.5	7.5S	7.5-7	8S	8-7.5	9S	9-8.5	10.5S	10.5-10	18.5S	18.5-18
		7.5S	7.5-7	8S	8-7.5	8.5S	8.5-8	9.5S	9.5-9	11S	11-10.5	19S	19-18.5
		8S	8-7.5	8.5S	8.5-8	9S	9-8.5	10S	10-9.5	11.5S	11.5-11	19.5S	19.5-19
		8.5S	8.5-8	9S	9-8.5	9.5S	9.5-9	10.5S	10.5-10	12S	12-11.5	20S	20-19.5
		9S	9-8.5	9.5S	9.5-9	10S	10-9.5	11S	11-10.5	12.5S	12.5-12	20.5S	20.5-20
		9.5S	9.5-9	10S	10-9.5	10.5S	10.5-10	11.5S	11.5-11	13S	13-12.5	21S	21-20.5
		10S	10-9.5	10.5S	10.5-10	11S	11-10.5	12S	12-11.5	13.5S	13.5-13	21.5S	21.5-21
				11S	11-10.5	11.5S	11.5-11	12.5S	12.5-12	14S	14-13.5	22S	22-21.5
				11.5S	11.5-11	12S	12-11.5	13S	13-12.5	14.5S	14.5-14	22.5S	22.5-22
				12S	12-11.5	12.5S	12.5-12	13.5S	13.5-13	15S	15-14.5	23S	23-22.5
				12.5S	12.5-12	13S	13-12.5	14S	14-13.5	15.5S	15.5-15	23.5S	23.5-23
				13S	13-12.5	13.5S	13.5-13	14.5S	14.5-14	16S	16-15.5	24S	24-23.5
						14S	14-13.5	15S	15-14.5	16.5S	16.5-116	24.5S	24.5-24
						14.5S	14.5-14	15.5S	15.5-15	17S	17-16.5	25S	25-24.5
						15S	15-14.5	16S	16-15.5	17.5S	17.5-17	25.5S	25.5-25
						15.5S	15.5-15	16.5S	16.5-16	18S	18-17.5	26S	26-25.5
						16S	16-15.5	17S	17-16.5	18.5S	18.5-18	26.5S	26.5-26
								17.5S	17.5-17	19S	19-18.5	27S	27-26.5
								18S	18-17.5	19.5S	19.5-19	27.5S	27.5-27
								18.5S	18.5-18	20S	20-19.5	28S	28-27.5
								19S	19-18.5	20.5S	20.5-20	28.5S	28.5-28
								19.5S	19.5-19	21S	21-20.5	29S	29-28.5
								20S	20-19.5	21.5S	21.5-21	29.5S	29.5-29
										22S	22-21.5	30S	30-29.5
										22.5S	22.5-22	30.5S	30.5-30
										23S	23-22.5	31S	31-30.5
										23.5S	23.5-23	31.5S	31.5-31
										24S	24-23.5	32S	32-31.5
										24.5S	24.5-24	32.5S	32.5-32
										25S	25-24.5	33S	33-32.5
										25.5S	25.5-25	33.5S	33.5-33
										26S	26-25.5	34S	34-33.5

特点：

◎材料：SUJ2
◎硬度：HRC44-48
◎利用沟槽差异，达到周围止水，仅中心的功能
◎适用于夹持有出水孔的刀具
◎可承受水压 7Mpa
◎非标准孔可订制

Features:

◎ Material:SUJ2
◎ Hardness:HRC44-48
◎ Differences in the use of grooves to reach around the sealing
◎ Central water feature only applies to folders to hold the water hole tool
◎ Canwithstand water pressure 7Mpa
◎ Non-standard holes can be customized

型号 Model No.	夹持能力 Capacity	规格 Type	支 / 套 PCS/SET
ERS11	3-7	3 4 4.5 5 5.5 6 6.5 7	8
ERS16	3-10	3 4 5 6 7 8 9 10	8
ERS20	3-13	3 4 5 6 7 8 9 10 11 12 13	11
ERS25	3-16	3 4 5 6 7 8 9 10 11 12 13 14 15 16	14
ERS32	3-20	3 4 5 6 7 8 9 10 11 12 13 14 15 16 17 18 19 20	18
ERS40	4-26	4 5 6 7 8 9 10 11 12 13 14 15 16 17 18 19 20 21 22 23 24 25 26	23
ERS50	12-34	12 14 16 18 20 22 24 26 28 30 32 34	12

BT–GSK 高速刀杆专用螺帽
BT–GSK Clamping nut for high speed milling chuck

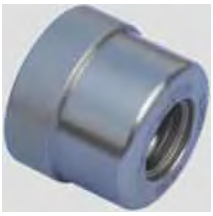

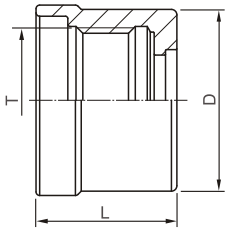

型号 Cat. No	L	D	T
GSK6	21	19.5	M15.5×1.0P
GSK10	24	27.5	M21.5×1.0P
GSK16	31	40	M32×1.5P
GSK25	37	55	M45×1.5P

OZ 螺帽
OZ Clamping nut

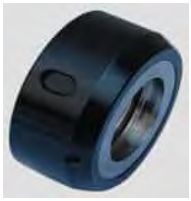

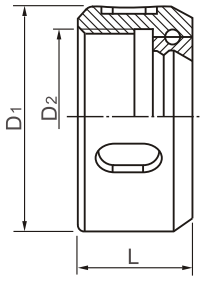

型号 Cat. No	L	D1	D2
0Z10	19	30	M22*1.5
0Z12	20	35	M27*1.5
0Z16	24	43	M33*1.5
0Z20	28	50	M42*2.0
0Z25	30	60	M48*2.0
0Z32	33.5	72	M60*2.5
0Z40	37	85	M68*2.5

HSK 内冷管专用扳手
HSK Internal cooling pipe wrench



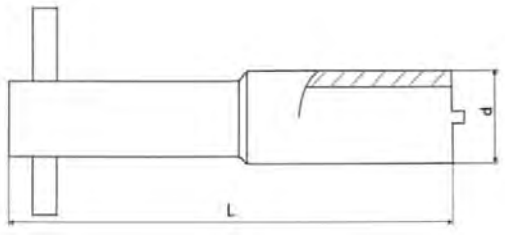

型号 Cat. No	L	d
HSK32-WR	90	13.5
HSK40-WR	90	13.5
HSK50-WR	95	15.5
HSK63-WR	100	18
HSK100-WR	125	24

扳 手
Wrench



開口型

型号 Cat. No	11A	16A	20A		
適用螺帽 Applicable clamping nut	ER11	ER16	ER20		



菊花型

型号 Cat. No	8M	11M	16M	20M	25M
適用螺帽 Applicable clamping nut	ER8	ER11	ER16	ER20	ER25



卡口型

型号 Cat. No	25UM	32UM	40UM	50UM
適用螺帽 Applicable clamping nut	ER25	ER32	ER40	ER50



勾頭型

型号 Cat. No		OZ25	OZ32	C20	C32			APU8	APU13	APU16
尺寸範圍 Min-Max		55 ~ 62	68 ~ 72	55 ~ 62	64 ~ 77			38 ~ 42	45 ~ 52	55 ~ 62



套筒型

型号 Cat. No	HG C19	HG C27	HG C40	HG C50
適用螺帽 Applicable clamping nut	GSK06	GSK10	GSK16	GSK20

BT 拉釘
BT Pull stud



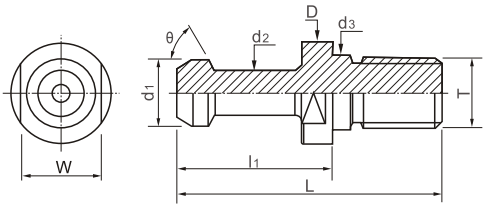

型号 Cat. No	D	d1	d2	d3	L	l1	W	T
BT30–45°	16.5	11	7	12.5	42	23	14	M12
BT40–45°	23	15	10	17	60	35	19	M16
BT50–45°	38	23	17	25	85	45	30	M24
BT30–60°	16.5	11	7	12.5	43	23	14	M12
BT40–60°	23	15	10	17	60	35	19	M16
BT50–60°	38	23	17	25	85	45	30	M24
BT30–90°	16.5	11	7	12.5	43	23	14	M12
BT40–90°	23	15	10	17	60	35	19	M16
BT50–90°	38	23	17	25	85	45	30	M24

BT 给水型拉钉
BT Pull stud（centre through coolant）



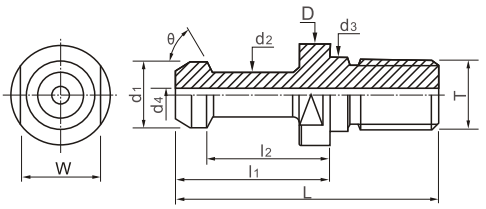

型号 Cat. No	D	D1	D2	D3	D4	L	L1	W	L2	T
BT40–45° W	23	15	10	17	4	60	35	19	28	M16
BT40–60° W	23	15	10	17	4	60	35	19	28	M16
BT40–90° W	23	15	10	17	4	60	35	19	28	M16
BT50–45° W	38	23	17	25	5	85	45	30	35	M24
BT50–60° W	38	23	17	25	5	85	45	30	35	M24
BT50–90° W	38	23	17	25	5	85	45	30	35	M24

DIN69872 拉钉
DIN69872 Pull stud



Fig Ⅰ

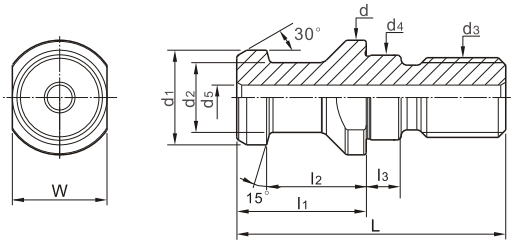

Fig Ⅱ

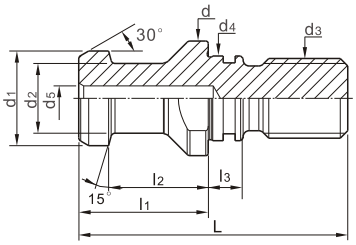

型号 Cat. No	Fig	L	l1	l2	l3	d	d1	d2	d3	d4	d5	W
DIN69872–30A		44	24	19	5	17	13	9	M12	13	—	14
DIN69872–40A	Ⅰ	54	26	20	7	23	19	14	M16	17	7.0	19
DIN69872–50A		74	34	25	10	36	28	21	M24	25	11.5	30
DIN69872–30B		44	24	19	5	17	13	9	M12	13	—	14
DIN69872–40B	Ⅱ	54	26	20	7	23	19	14	M16	17	7.0	19
DIN69872–50B		74	34	25	10	36	28	21	M24	25	11.5	30

JIS 拉钉
JIS Pull stud



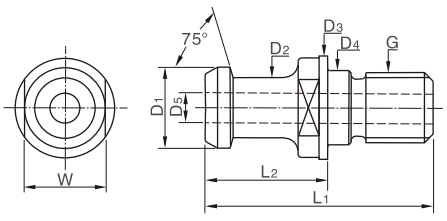

型号 Cat. No	l1	l2	D1	D2	D3	D4	D5	W	G
JIS B6339–30P	43	23.4	12	8	16.5	12.5	4	14	M12
JIS B6339–40P	54	29	19	14	23	17	7	19	M16
JIS B6339–50P	74	34	28	21	38	25	10	30	M24

MAZAK 拉钉
MAZAK Pull stud



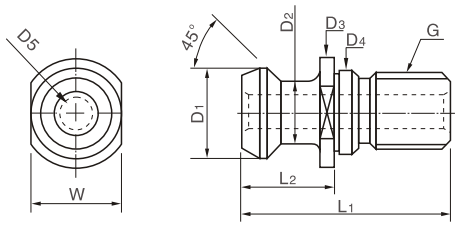

型号 Cat. No	L1	L2	D1	D2	D3	D4	D5	W	G
MAZAK–BT40	44.1	19.1	18.8	12.45	22	17	7	19	M16
MAZAK–BT50	65.2	25.2	29	20.83	37	25	10	30	M24

ISO7388A/B 拉钉
ISO7388A/B Pull stud



Fig Ⅰ

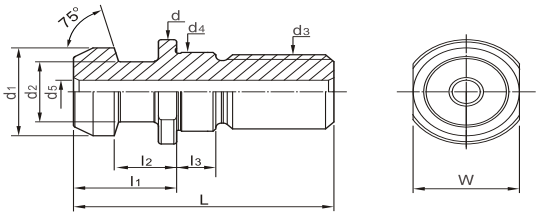

Fig Ⅱ

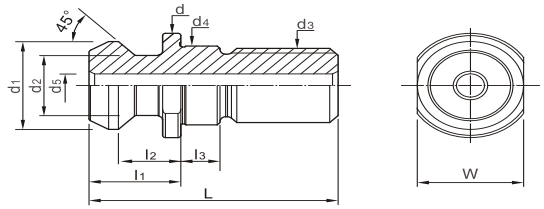

型号 Cat. No	Fig	L	L1	L2	L3	d	d1	d2	d3	d4	d5	W
ISO7388A–30		44	24	19	5	17	12	8	M12	13	––	14
ISO7388A–40	Ⅰ	54	26	20	7	23	19	14	M16	17	7.0	19
ISO7388A–50		74	34	25	10	36	28	21	M24	25	11.5	30
ISO7388B–30		27	11.8	8.1	5	17	13.3	9.3	M12	13	––	14
ISO7388B–40	Ⅱ	44.5	16.40	11.15	7	22.5	18.95	12.95	M16	17	7.0	19
ISO7388B–50		65.5	25.55	17.95	10	36.0	29.10	19.60	M24	25	11.5	30

MTB 专用加长拉钉
MTB Pull stud



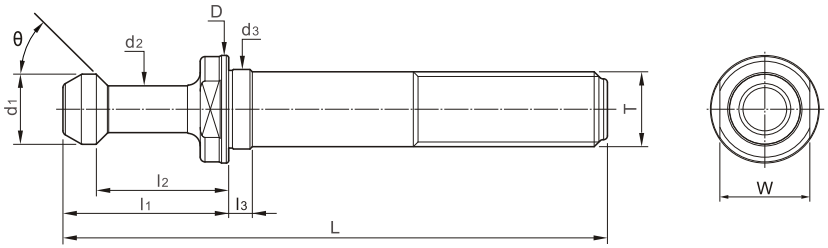

型号 Cat. No	L	l1	l2	l3	D	d1	d2	d3	T	W
BT40–45° – MTB4	115	35	28	7	23	15	10	17	M16	19
BT50–45° – MTB5	170	45	35	10	38	23	17	25	M20	30
DIN69872–40–MTB4	106	26	20	7	23	19	14	17	M16	19
DIN69872–50–MTB5	159	34	25	10	36	28	21	25	M20	30
JISB6339–40P–MTB4	112	29	23	7	23	19	14	17	M16	19
JISB6339–50P–MTB5	159	34	25	10	38	28	21	25	M20	30

CAT 拉钉
CAT Pull stud



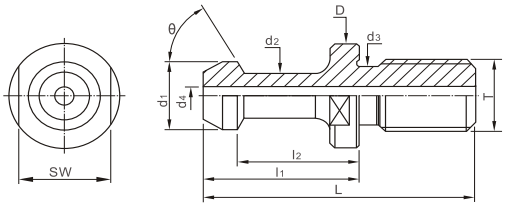

Fig Ⅰ

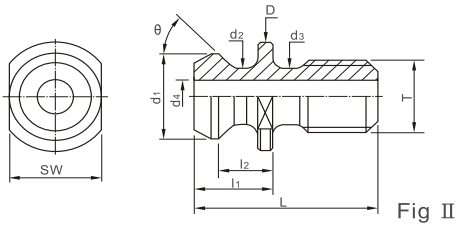

Fig Ⅱ

型 號 Cat. No	D	d1	d2	d3	d4	L	l1	l2	SW	T–UNG	Fig
CAT30–45° –ANSI	0.65	0.52	0.385	0.385		1.10	0.460	0.320	0.53	1/2"–13	
CAT40–45° –ANSI	0.94	0.74	0.490	0.490	—	1.50	0.640	0.440	0.75	5/8"–11	
CAT50–45° –ANSI	1.44	1.14	0.820	0.820		2.30	1.00	0.700	1.25	1"–8	2
CAT40–45° –W	0.94	0.74	0.490	0.490	0.281	1.50	0.640	0.440	0.75	5/8"–11	
CAT50–45° –W	1.44	1.14	0.820	0.820	0.468	2.30	1.00	0.400	1.25	1"–8	
CAT40–45° –MAS											
CAT40–60° –MAS	0.905	0.590	0.394	0.512	—	2.25	1.266	0.99	0.748	5/8"–11	
CAT40–90° –MAS											
CAT50–45° –MAS											
CAT50–60° –MAS	1.102	0.906	0.669	0.827	—	3.346		1.378	1.181	1"–8	
CAT50–90° –MAS											
CAT40–45°											
CAT40–60°	0.905	0.590	0.394	0.512	0.157	2.25	1.266	0.99	0.748	5/8"–11	1
CAT40–90°											
CAT50–45°											
CAT50–60°	1.102	0.906	0.669	0.827	0.256	3.346	1.722	1.378	1.181	1"–8	
CAT50–90°											
CAT30–45° –M	0.65	0.52	0.385	0.385		1.10	0.460	0.320	0.53	M12 × 1.75P	
CAT40–45° –M	0.94	0.74	0.490	0.490	—	1.50	0.640	0.440	0.75	M16 × 2.0P	2
CAT50–45° –M	1.44	1.140	0.820	0.820		2.30	1.00	0.700	1.25	M2.4 × 3.0P	

根據客户訂單制作　Made by client's order

HSK 内冷管（水嘴）
HSK Internal cooling pipe



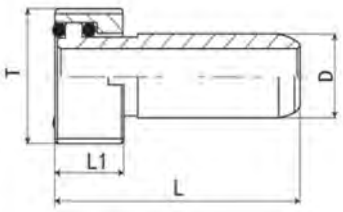

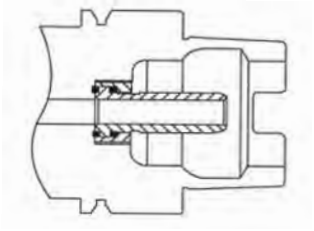

型号 Cat. No	L	L1	D	T
HSK32-CP	26	5.5	6	M10*1.0
HSK40-CP	29.3	7.5	8	M12*1.0
HSK50-CP	33	9.5	10	M16*1.0
HSK63-CP	36.6	11.5	12	M16*1.0
HSK100-CP	44	15.5	16	M24*1.0

主轴清洁棒
Spindle taper wiper



型号 Cat. No	斜度 Taper No.	用 Apply to
W30	#30	BT30 DAT(JT)30
W40	#40	BT40 DAT(JT)40
W50	#50	BT50 DAT(JT)50
HSK–W63	HSK63	HSK 63

BT/DAT/CAT 锁刀座
BT/DAT/CAT Tool locking fixture



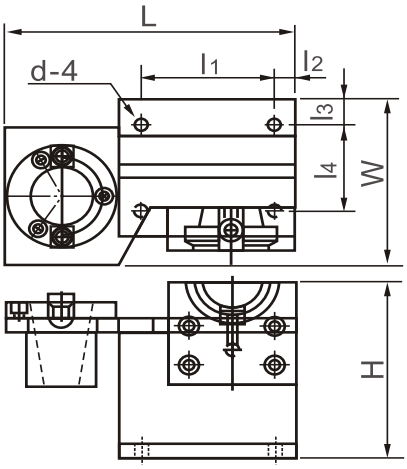

型号 Cat. No	L	l1	l2	l3	l4	H	W
BT30	210	95	10	15	67	130	100
BT40	210	95	10	15	67	130	100
BT50	275	113	20	24	105	200	150
SK30	210	95	10	15	67	130	100
SK40	210	95	10	15	67	130	100
SK50	275	113	20	24	105	200	150
CAT30	210	95	10	15	67	130	100
CAT40	210	95	10	15	67	130	100
CAT50	275	113	20	24	105	200	150

HSK 锁刀座
HSK Tool locking fixture



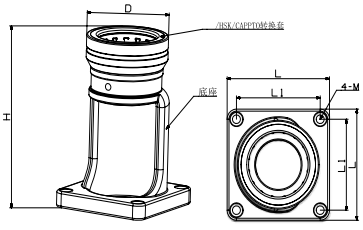

型号 Cat. No	H	D	D1	L	L1
HSK32A	165	58	32	105	80
HSK40A	165	64	40	105	80
HSK50A	165	75	50	105	80
HSK63A	185	88	63	105	80
HSK100A	120	131	100	135	111.5
HSK32E	165	58	32	105	80
HSK40E	165	64	40	105	80
HSK50E	165	75	50	105	80
HSK63E	185	88	63	105	80
HSK50F	165	75	63	105	80
HSK63F	185	88	63	105	80

磁座型量表内置式Z轴设定仪（有磁）
Z – Axis zero presetter (Magnetic)



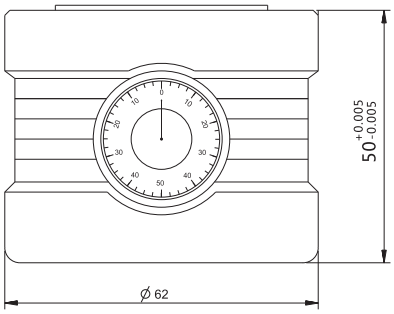

型号 Cat. No	型 式	高度
ZDI–50B	量表式(内藏)	50

ZOP–50 光电式Z轴设定仪（有磁）
Z–Axis zero presetter with leg and beep (Magnetic)



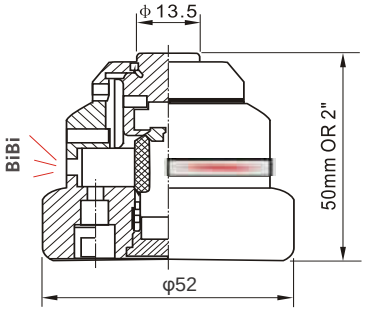

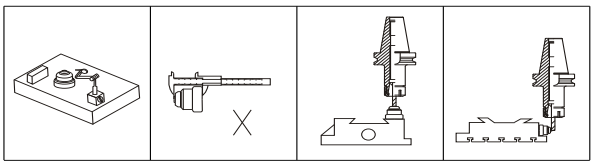

型 號 Cat. No	型式	高度	伸縮距離
ZOP–50	光電式	50	3

3D光电式寻边器
3D Electronic edge finder





在电脑铣床上/加工中心上找寻中心/测量用精密仪器。适合X/Y/Z三轴或多轴使用，使用前需夹在刀柄上校正其同心度（出厂前已校正）。采用高节能之芯片、精密设计电路，使电池耗能较小。同时具备红光，更直观快捷。

可按需选用M4类型测针，更换方便，无需要专用工具即可更换。以上测头为选配，标准产品只带一个测头。

Precision instruments for center - finding and measurement on CNC milling machines / machining centers. They are suitable for use on X/Y/Z three - axis or multi - axis machines. Before use, they need to be clamped onto the tool holder to check their concentricity (already calibrated before leaving the factory). These instruments adopt high - energy - efficient chips and a precisely designed circuit, resulting in low battery consumption. Meanwhile, they are equipped with red light, which makes the operation more intuitive and quick.

M4 - type probe needles can be selected as needed. They are convenient to replace and can be changed without special tools. The above - mentioned probes are optional. The standard product comes with only one probe.

OP 光电式寻边器
OP Electronic edge finder



型号 Cat. No	柄径 Shank diameter	长度 Length	测头 Ball probe
OP-20	Φ20	159	Φ10
OP-32	Φ32	159	Φ10

ME 偏心式寻边器
ME Rotary edge finder



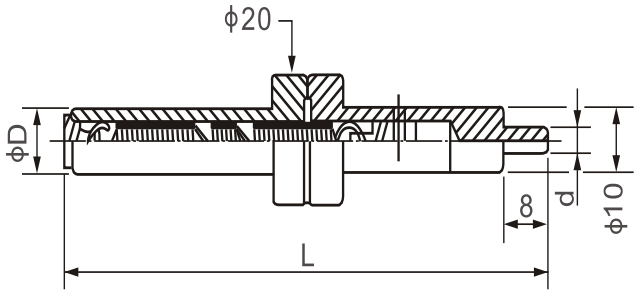

型号 Cat. No	柄径 D Shank diameter	长度 L Length	测头 d Ball probe	精度 Accaracy
ME-420	Φ10	90	Φ4,Φ10	±0.002

MT T型偏心式寻边器
MT Rotary edge finder



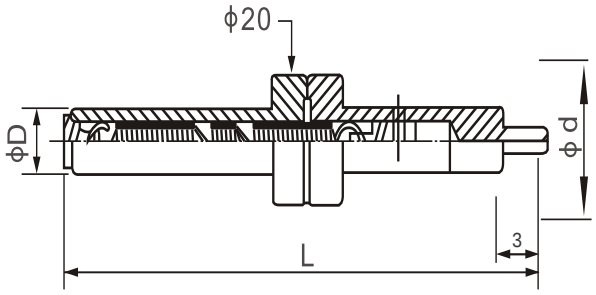

型号 Cat. No	柄径 D Shank diameter	长度 L Length	测头 d Ball probe	精度 Accaracy
D17-20-105L	10	105	17	±0.002
D20-20-105L	10	105	20	±0.002
D22-20-105L	10	105	22	±0.002
D28-20-105L	10	105	28	±0.002
D30-20-105L	10	105	30	±0.002

主轴检测棒
Test Arbor





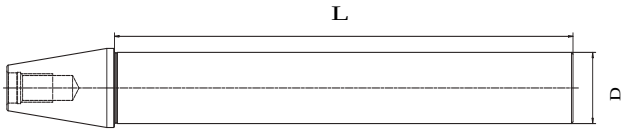

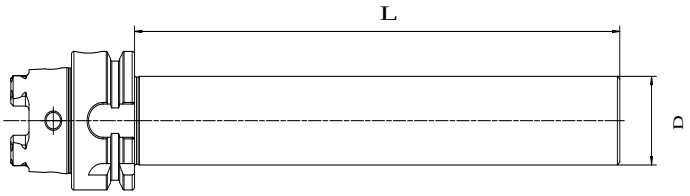





型号 Cat. No	D	L
BT30-D30-250L	30	250
BT40-D40-300L	40	300
BT50-D50-300L	50	300
CAT30-D32-250L	32	250
CAT40-D40-300L	40	300
CAT50-D50-300L	50	300
HSK32A-D25-180L	25	180
HSK40A-D25-180L	25	180
HSK50A-D32-200L	32	200
HSK63A-D40-300L	40	300
HSK100A-D40-300L	40	300
BBT30-D30-250L	30	250
BBT40-D30-300L	30	300
BT30-D30-300L	30	300
BT50-D40-300L	40	300
HSK25E-D20-150L	20	150
HSK32E-D25-200L	25	250
HSK40E-D30-200L	30	200
HSK50E-D32-250L	32	250
HSK63F-D40-300L	40	300
ISO20-D20-200L	20	200
ISO25-D20-200L	20	200
ISO30-D30-250L	30	250

58件套组合压板
Clamping Kits 58PCS





型号 Cat No	Wt(kg)	packing(cm)
M8-58 pcs	6.5kg	33x11×20
M10-58 pcs	7kg	33x11×20
M12-58 pcs	9.5kg	37x11×22
M14-58 pcs	12kg	39x11×22
M16-58 pcs	16kg	49x13×23
M18-58 pcs	23kg	38x16×29
M20-58 pcs	25kg	38x16×29
M22-58 pcs	40kg	47x25×29

主轴拉力计
Dynamometer







型号 Cat No	建议最小拉力/KN Suggested Min Tensile Force /.KN	测力范围/KN Measuring Force Range / KN
SK30/BT30	4.5	1-18
D-BT30	4.5	1-18
SK40/BT40	8.5	2-18
D-BT40	8.5	2-18
SK50/BT50	18	5-45
D-BT50	18	5-45
HSK32	5	0-18
HSK40	6.8	0-45
HSK50	11	0-45
HSK63	18	0-45
HSK80	28	0-90
HSK100	45	0-90

NBD®
PRECISION TOOL

车削刀具

Turning tools



压板型外圆刀杆（M系列） EXTERNAL TURNING TOOL

MCLNR/L



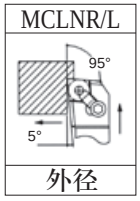

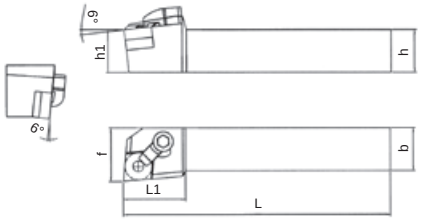

型号 Cat No	刀片 Insert	适用条件 Application						配件 Parts				
		h	b	L	L1	h1	f	刀垫 Shim	销钉 Lock pin	压板 Clamp	压板螺钉 Screw	扳手 Wrench
MCLNR/L1616H12	CN□□1204□□	16	16	100	30	16	20	1204	0617	1814	0625	L2.5 L3.0
MCLNR/L2020K12		20	20	125	30	20	25					
MCLNR/L2525M12		25	25	150	32	25	32					
MCLNR/L3232P12		32	32	170	37	32	40					
MCLNR/L2525M16	CN□□1606□□	25	25	150	32	25	32	1606	0822	2415	0828	L3.0
MCLNR/L3232P16		32	32	170	37	32	40					

MCKNR/L

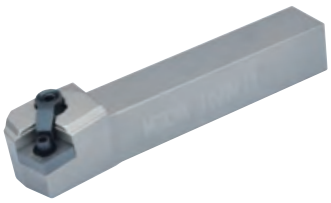

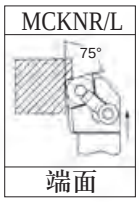

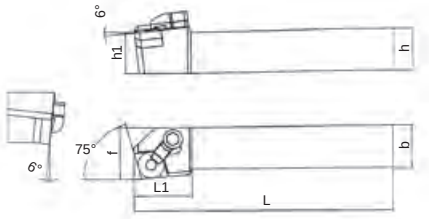

型号 Cat No	刀片 Insert	适用条件 Application						配件 Parts				
		h	b	L	L1	h1	f	刀垫 Shim	销钉 Lock pin	压板 Clamp	压板螺钉 Screw	扳手 Wrench
MCKNR/L2020K12	CN□□1204□□	20	20	125	32	20	25	1204	0617	1814	0625	L2.5 L3.0
MCKNR/L2525M12		25	25	150	32	25	32					
MCKNR/L3232P12		32	32	170	32	32	40					

MCGNR/L



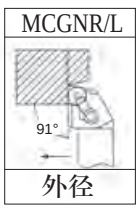

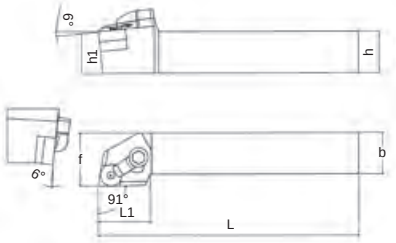

型号 Cat No	刀片 Insert	适用条件 Application						配件 Parts				
		h	b	L	L1	h1	f	刀垫 Shim	销钉 Lock pin	压板 Clamp	压板螺钉 Screw	扳手 Wrench
MCGNR/L2020K12	CN□□1204□□	20	20	125	32	20	25	1204	0617	1814	0625	L2.5 L3.0
MCGNR/L2525M12		25	25	150	32	25	32					
MCGNR/L3232P12		32	32	170	32	32	40					

MCMNN



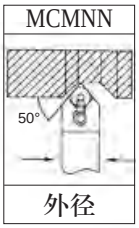

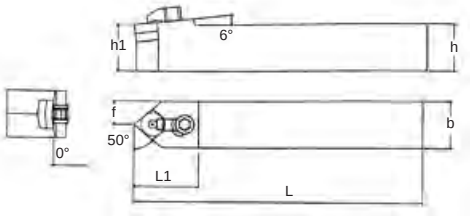

型号 Cat No	刀片 Insert	适用条件 Application						配件 Parts				
		h	b	L	L1	h1	f	刀垫 Shim	销钉 Lock pin	压板 Clamp	压板螺钉 Screw	扳手 Wrench
MCMNN2020K12	CN□□1204□□	20	20	125	32	20	10	1204	0617	1814	0625	L2.5 L3.0
MCMNN2525M12		25	25	150	32	25	12.5					
MCMNN3232P12		32	32	170	32	32	16					

MCSNR/L



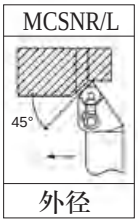

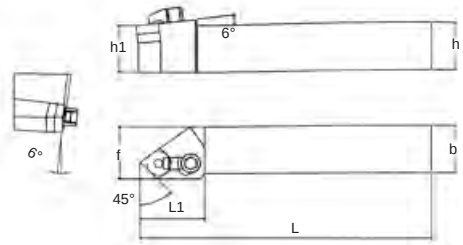

型号 Cat No	刀片 Insert	适用条件 Application						配件 Parts				
		h	b	L	L1	h1	f	刀垫 Shim	销钉 Lock pin	压板 Clamp	压板螺钉 Screw	扳手 Wrench
MCSNR/L2020K12	CN□□1204□□	20	20	125	32	20	25	1204	0617	1814	0625	L2.5 L3.0
MCSNR/L2525M12		25	25	150	32	25	32					
MCSNR/L3232P12		32	32	170	32	32	40					

MSBNR/L



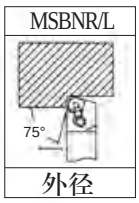

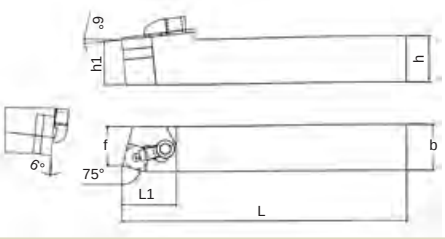

型号 Cat No	刀片 Insert	适用条件 Application						配件 Parts				
		h	b	L	L1	h1	f	刀垫 Shim	销钉 Lock pin	压板 Clamp	压板螺钉 Screw	扳手 Wrench
MSBNR/L2020K12	SN□□1204□□	20	20	125	32	20	17	1204	0617	1814	0625	L2.5 L3.0
MSBNR/L2525M12		25	25	150	32	25	22					
MSBNR/L3232P12		32	32	170	32	32	27					

MSSNR／L



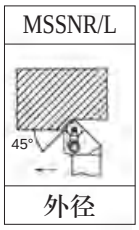

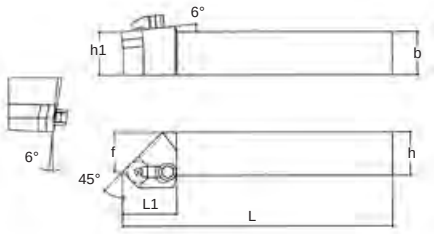

型号 Cat No	刀 片 Insert	适用条件 Application						配 件 Parts				
		h	b	L	L1	h1	f	刀垫 Shim	销钉 Lock pin	压板 Clamp	压板螺钉 Screw	扳手 Wrench
MSSNR／L2020K12	SN□□1204□□	20	20	125	34	20	25	1204	0617	1814	0625	L2.5 L3.0
MSSNR／L2525M12		25	25	150	34	25	32					
MSSNR／L3232P12		32	32	170	34	32	40					

MSDNN



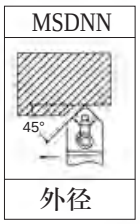

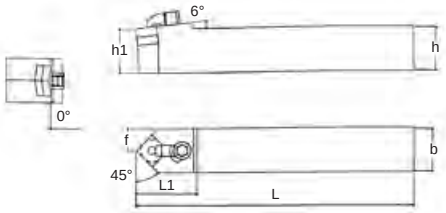

型号 Cat No	刀 片 Insert	适用条件 Application						配 件 Parts				
		h	b	L	L1	h1	f	刀垫 Shim	销钉 Lock pin	压板 Clamp	压板螺钉 Screw	扳手 Wrench
MSDNN1616H12	SN□□1204□□	16	16	100	34	16	8	1204	0617	1814	0625	L2.5 L3.0
MSDNN2020K12		20	20	125	34	20	10					
MSDNN2525M12		25	25	150	34	25	12.5					
MSDNN3232P12		32	32	170	34	32	16					

MSKNR／L



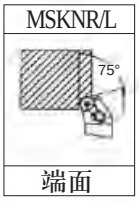

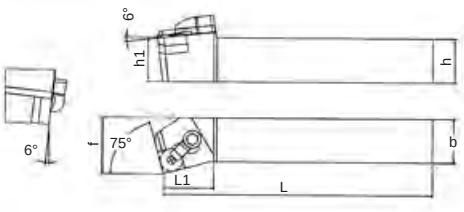

型号 Cat No	刀 片 Insert	适用条件 Application						配 件 Parts				
		h	b	L	L1	h1	f	刀垫 Shim	销钉 Lock pin	压板 Clamp	压板螺钉 Screw	扳手 Wrench
MSKNR／L2020K12	SN□□1204□□	20	20	125	29	20	25	1204	0617	1814	0625	L2.5 L3.0
MSKNR／L2525M12		25	25	150	29	25	32					
MSKNR／L3232P12		32	32	170	29	32	40					

MTJNR/L



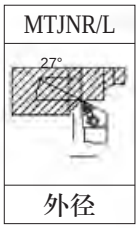

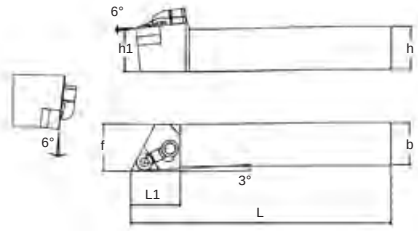

型号 Cat No	刀片 Insert	适用条件 Application						配件 Parts				
		h	b	L	L1	h1	f	刀垫 Shim	销钉 Lock pin	压板 Clamp	压板螺钉 Screw	扳手 Wrench
MTJNR/L1616H16	TN□□1604□□	16	16	100	30	16	20	1603	0513	1814	0625	L2.0 L3.0
MTJNR/L2020K16		20	20	125	30	20	25					
MTJNR/L2525M16		25	25	150	32	25	32					
MTJNR/L3232P16		32	32	170	36	32	40					

MTFNR/L

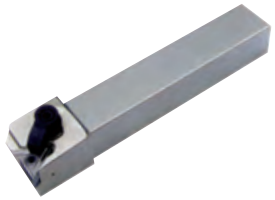

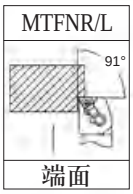

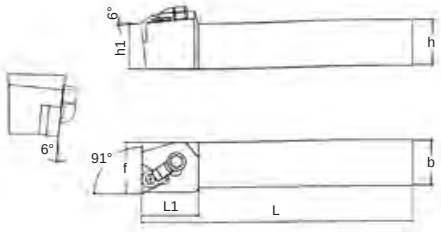

型号 Cat No	刀片 Insert	适用条件 Application						配件 Parts				
		h	b	L	L1	h1	f	刀垫 Shim	销钉 Lock pin	压板 Clamp	压板螺钉 Screw	扳手 Wrench
MTFNR/L1616H16	TN□□1604□□	16	16	100	28	16	20	1603	0513	1814	0625	L2.0 L3.0
MTFNR/L2020K16		20	20	125	30	20	25					
MTFNR/L2525M16		25	25	150	32	25	32					
MTFNR/L3232P16		32	32	170	35	32	40					

MTGNR/L

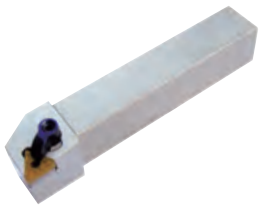

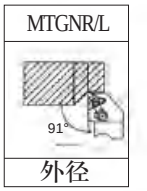

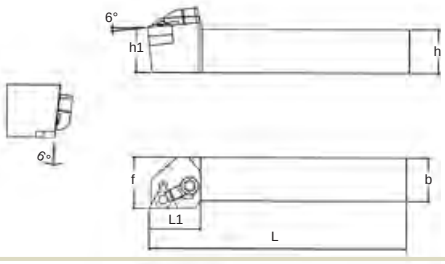

型号 Cat No	刀片 Insert	适用条件 Application						配件 Parts				
		h	b	L	L1	h1	f	刀垫 Shim	销钉 Lock pin	压板 Clamp	压板螺钉 Screw	扳手 Wrench
MTGNR/L1616H16	TN□□1604□□	16	16	100	30	16	20	1603	0513	1814	0625	L2.0 L3.0
MTGNR/L2020K16		20	20	125	30	20	25					
MTGNR/L2525M16		25	25	150	30	25	32					
MTGNR/L3232P16		32	32	170	36	32	40					

MTENN



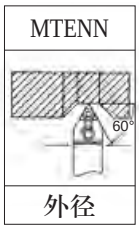

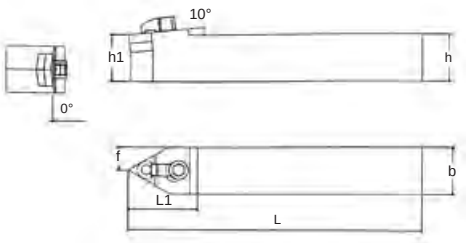

型号 Cat No	刀片 Insert	适用条件 Application						配件 Parts				
		h	b	L	L1	h1	f	刀垫 Shim	销钉 Lock pin	压板 Clamp	压板螺钉 Screw	扳手 Wrench
MTENN2020K16	TN□□1604□□	20	20	125	35	20	10	1603	0513	1814	0625	L2.0 L3.0
MTENN2525M16		25	25	150	35	25	12.5					
MTENN3232P16		32	32	170	35	32	16					

MTBNR/L



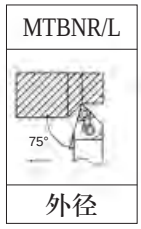

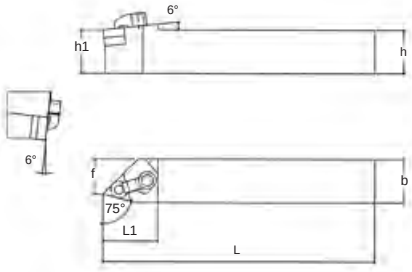

型号 Cat No	刀片 Insert	适用条件 Application						配件 Parts				
		h	b	L	L1	h1	f	刀垫 Shim	销钉 Lock pin	压板 Clamp	压板螺钉 Screw	扳手 Wrench
MTBNR/L2020K16	TN□□1604□□	20	20	125	35	20	15.5	1603	0513	1814	0625	L2.0 L3.0
MTBNR/L2525M16		25	25	150	35	25	20.5					

MWLNR/L



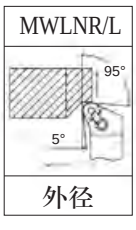

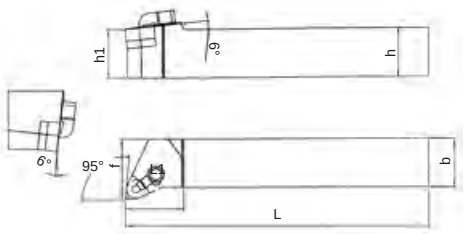

型号 Cat No	刀片 Insert	适用条件 Application						配件 Parts				
		h	b	L	L1	h1	f	刀垫 Shim	销钉 Lock pin	压板 Clamp	压板螺钉 Screw	扳手 Wrench
MWLNR/L1616H06	WN□□0604□□	16	16	100	25	16	20	0603	0513	1814	0620	L2.0
MWLNR/L2020K06		20	20	125	25	20	25	0603	0513	1814	0625	L3.0
MWLNR/L2020K08	WN□□0804□□	20	20	125	28	20	25	0804	0617	1814	0625	L2.5 L3.0
MWLNR/L2525M08		25	25	150	28	25	32					
MWLNR/L3232P08		32	32	170	30	32	40					

压板型外圆刀杆（D系列） EXTERNAL TURNING TOOL

DCLNR/L

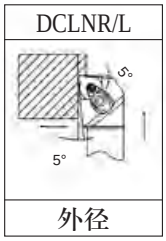

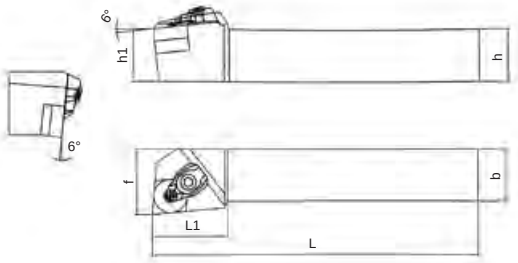

型号 Cat No	刀片 Insert	适用条件 Application						配件 Parts					
		h	b	L	L1	h1	f	刀垫 Shim	销钉 Lock pin	压板 Clamp	固定螺钉 Screw	弹簧 Spring	扳手 Wrench
DCLNR/L1616H12	CN□□1204□□	16	16	100	32	16	20	1204	0614	2214	0520	0710	L4.0
DCLNR/L2020K12		20	20	125	32	20	25						
DCLNR/L2525M12		25	25	150	32	25	32						
DCLNR/L3232P12		32	32	170	37	32	40						

DCKNR/L

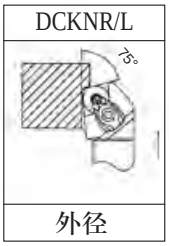

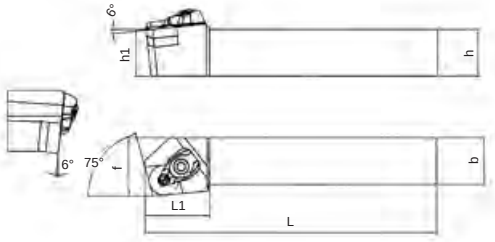

型号 Cat No	刀片 Insert	适用条件 Application						配件 Parts					
		h	b	L	L1	h1	f	刀垫 Shim	销钉 Lock pin	压板 Clamp	固定螺钉 Screw	弹簧 Spring	扳手 Wrench
DCKNR/L2020K12	CN□□1204□□	20	20	125	32	20	25	1204	0614	2214	0520	0710	L4.0
DCKNR/L2525M12		25	25	150	32	25	32						
DCKNR/L3232P12		32	32	170	32	32	40						

DCMNN

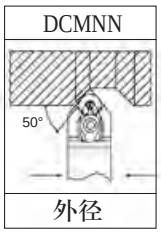

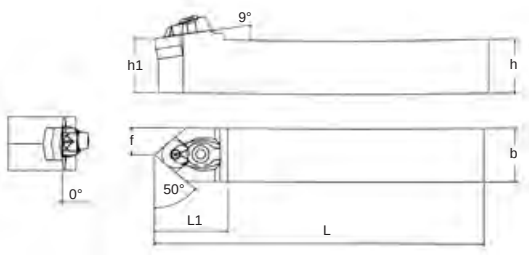

型号 Cat No	刀片 Insert	适用条件 Application						配件 Parts					
		h	b	L	L1	h1	f	刀垫 Shim	销钉 Lock pin	压板 Clamp	固定螺钉 Screw	弹簧 Spring	扳手 Wrench
DCMNN2020K12	CN□□1204□□	20	20	125	32	20	10	1204	0614	2214	0520	0710	L4.0
DCMNN2525M12		25	25	150	32	25	12.5						
DCMNN3232P12		32	32	170	37	32	16						

DCSNR/L

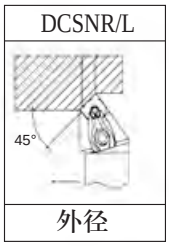

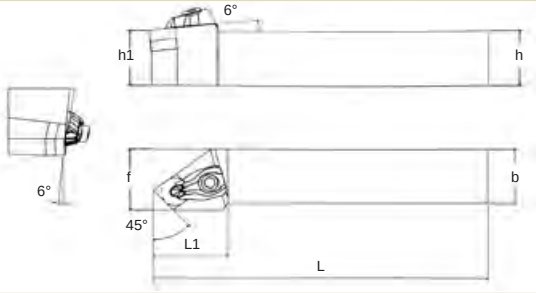

型号 Cat No	刀片 Insert	适用条件 Application						配件 Parts					
		h	b	L	L1	h1	f	刀垫 Shim	销钉 Lock pin	压板 Clamp	固定螺钉 Screw	弹簧 Spring	扳手 Wrench
DCSNR/L2020K12	CN□□1204□□	20	20	125	32	20	25	1204	0614	2214	0520	0710	L4.0
DCSNR/L2525M12		25	25	150	32	25	32						
DCSNR/L3232P12		32	32	170	32	32	40						

DDPNN

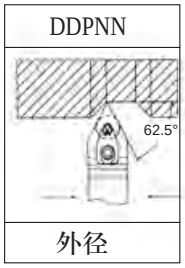

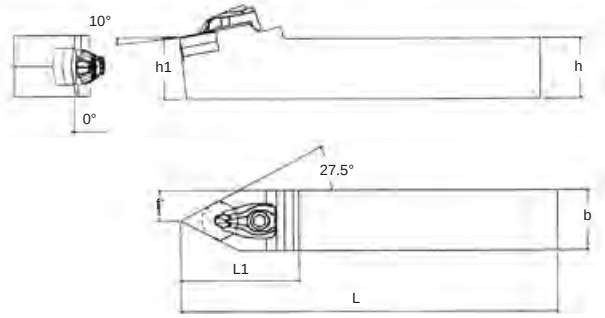

型号 Cat No	刀片 Insert	适用条件 Application						配件 Parts					
		h	b	L	L1	h1	f	刀垫 Shim	销钉 Lock pin	压板 Clamp	固定螺钉 Screw	弹簧 Spring	扳手 Wrench
DDPNN2020K15	DN□□1504□□ DN□□1506□□	20	20	125	41	20	10	1506 1504	0614	2914	0520	0710	L4.0
DDPNN2525M15		25	25	150	41	25	12.5						
DDPNN3232P15		32	32	170	46	32	16						

DDJNR/L



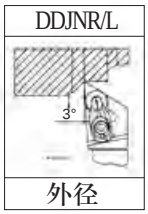

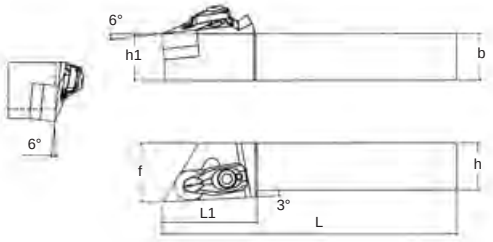

型号 Cat No	刀片 Insert	适用条件 Application						配件 Parts					
		h	b	L	L1	h1	f	刀垫 Shim	销钉 Lock pin	压板 Clamp	固定螺钉 Screw	弹簧 Spring	扳手 Wrench
DDJNR/L2020K15	DN□□1504□□ DN□□1506□□	20	20	125	41	20	25	1506 1504	0614	2514	0520	0710	L4.0
DDJNR/L2525M15		25	25	150	41	25	32						
DDJNR/L3232P15		32	32	170	41	32	40						

DSBNR/L

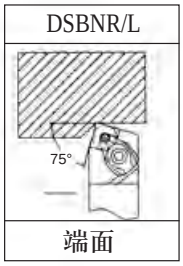

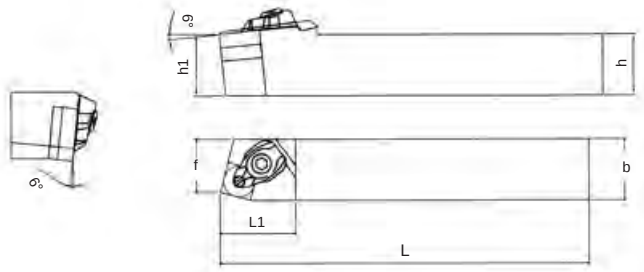

型号 Cat No	刀片 Insert	适用条件 Application						配件 Parts					
		h	b	L	L1	h1	f	刀垫 Shim	销钉 Lock pin	压板 Clamp	固定螺钉 Screw	弹簧 Spring	扳手 Wrench
DSBNR/L2020K12	SN□□1204□□	20	20	125	32	20	17	1204	0617	1814	0625	0710	L2.5 L3.0
DSBNR/L2525M12		25	25	150	32	25	22						
DSBNR/L3232P12		32	32	170	32	32	27						

DSSNR/L

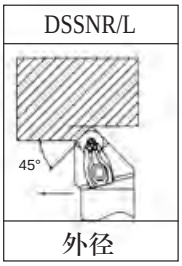

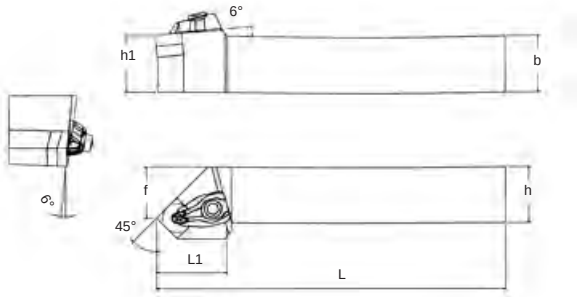

型号 Cat No	刀片 Insert	适用条件 Application						配件 Parts					
		h	b	L	L1	h1	f	刀垫 Shim	销钉 Lock pin	压板 Clamp	固定螺钉 Screw	弹簧 Spring	扳手 Wrench
DSSNR/L2020K12	SN□□1204□□	20	20	125	34	20	25	1204	0614	2214	0520	0710	L4.0
DSSNR/L2525M12		25	25	150	34	25	32						
DSSNR/L3232P12		32	32	170	34	32	40						

DSKNR/L

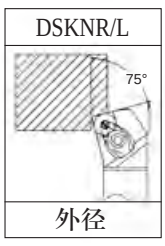

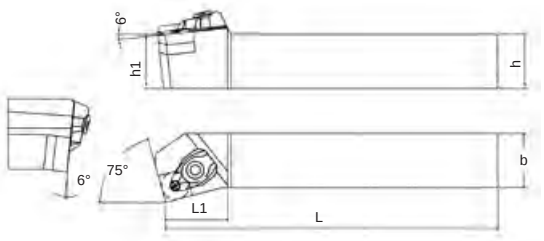

型号 Cat No	刀片 Insert	适用条件 Application						配件 Parts					
		h	b	L	L1	h1	f	刀垫 Shim	销钉 Lock pin	压板 Clamp	固定螺钉 Screw	弹簧 Spring	扳手 Wrench
DSKNR/L2020K12	SN□□1204□□	20	20	125	29	20	25	1204	0614	2214	0520	0710	L4.0
DSKNR/L2525M12		25	25	150	29	25	32						
DSKNR/L3232P12		32	32	170	29	32	40						

DTJNR／L

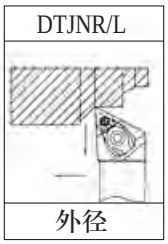

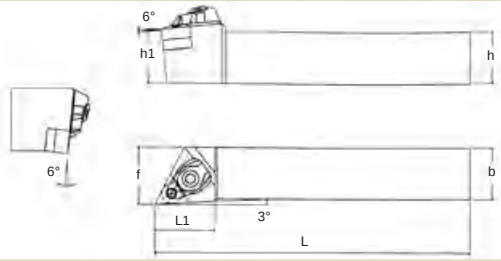

型号 Cat No	刀片 Insert	适用条件 Application						配件 Parts					
		h	b	L	L1	h1	f	刀垫 Shim	销钉 Lock pin	压板 Clamp	固定螺钉 Screw	弹簧 Spring	扳手 Wrench
DTJNR／L1616H16	TN□□1604□□	16	16	100	30	16	20	1603	0512	2313	0520	0710	L4.0
DTJNR／L2020K16		20	20	125	32	20	25						
DTJNR／L2525M16		25	25	150	32	25	32						
DTJNR／L3232P16		32	32	170	32	32	40						

DTFNR／L

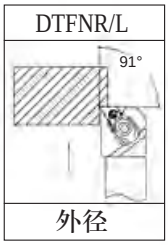

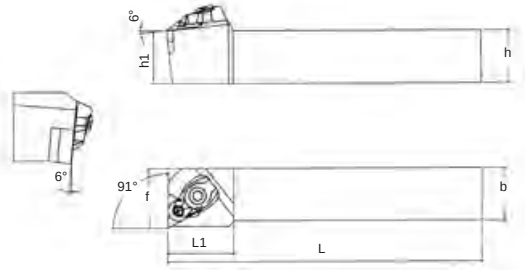

型号 Cat No	刀片 Insert	适用条件 Application						配件 Parts					
		h	b	L	L1	h1	f	刀垫 Shim	销钉 Lock pin	压板 Clamp	固定螺钉 Screw	弹簧 Spring	扳手 Wrench
DTFNR／L1616H16	TN□□1604□□	16	16	100	28	16	20	1603	0512	2313	0520	0710	L4.0
DTFNR／L2020K16		20	20	125	30	20	25						
DTFNR／L2525M16		25	25	150	32	25	32						
DTFNR／L3232P16		32	32	170	35	32	40						

DVVNN

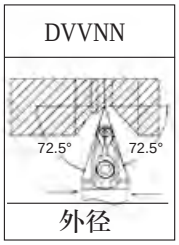

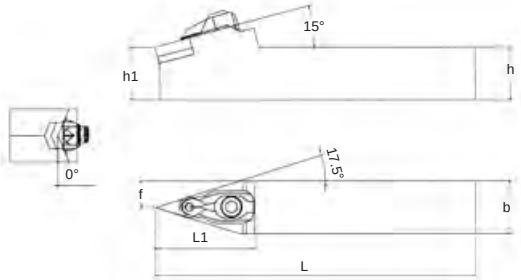

型号 Cat No	刀片 Insert	适用条件 Application						配件 Parts					
		h	b	L	L1	h1	f	刀垫 Shim	销钉 Lock pin	压板 Clamp	固定螺钉 Screw	弹簧 Spring	扳手 Wrench
DVVNN2020K16	SN□□1604□□	20	20	125	46	20	10	1603	0512	2914	0520	0710	L4.0
DVVNN2525M16		25	25	150	46	25	12.5						
DVVNN3232P16		32	32	170	46	32	40						

DVJNR/L



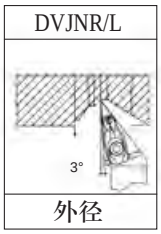

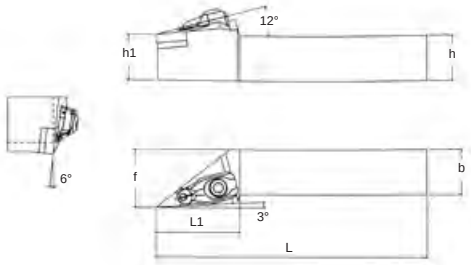

型号 Cat No	刀片 Insert	适用条件 Application						配件 Parts					
		h	b	L	L1	h1	f	刀垫 Shim	销钉 Lock pin	压板 Clamp	固定螺钉 Screw	弹簧 Spring	扳手 Wrench
DVJNR/L1616H16	VN□□1604□□	16	16	100	46	16	20	1603	0512	2914	0520	0710	L4.0
DVJNR/L2020K16		20	20	125	46	20	25						
DVJNR/L2525M16		25	25	150	46	25	32						
DVJNR/L3232P16		32	32	170	46	32	40						

DVQNR/L

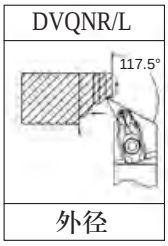

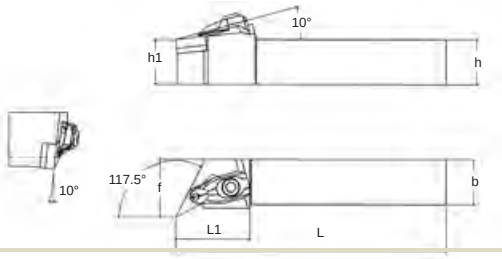

型号 Cat No	刀片 Insert	适用条件 Application						配件 Parts					
		h	b	L	L1	h1	f	刀垫 Shim	销钉 Lock pin	压板 Clamp	固定螺钉 Screw	弹簧 Spring	扳手 Wrench
DVQNR/L2020K16	VN□□1604□□	20	20	125	46	20	25	1603	0512	2914	0520	0710	L4.0
DVQNR/L2525M16		25	25	150	46	25	32						
DVQNR/L3232P16		32	32	170	46	32	40						

DWLNR/L

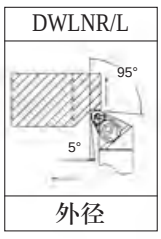

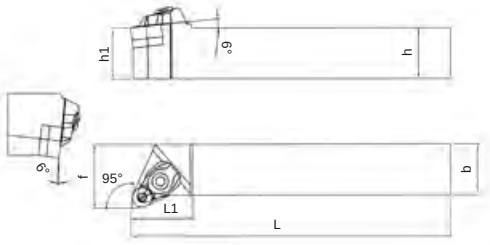

型号 Cat No	刀片 Insert	适用条件 Application						配件 Parts					
		h	b	L	L1	h1	f	刀垫 Shim	销钉 Lock pin	压板 Clamp	固定螺钉 Screw	弹簧 Spring	扳手 Wrench
DWLNR/L1616H06	WN□□0604□□	16	16	100	25	16	20	0603	0512	2313	0520	0710	L4.0
DWLNR/L2020K06		20	20	125	25	20	25						
DWLNR/L2020K08	WN□□0804□□	20	20	125	25	20	25	0804	0614	2214			
DWLNR/L2525M08		25	25	150	25	25	32						
DWLNR/L3232P08		32	32	170	25	32	40						

螺钉型外圆刀杆（S系列） EXTERNAL TURNING TOOLS

SCLCR／L



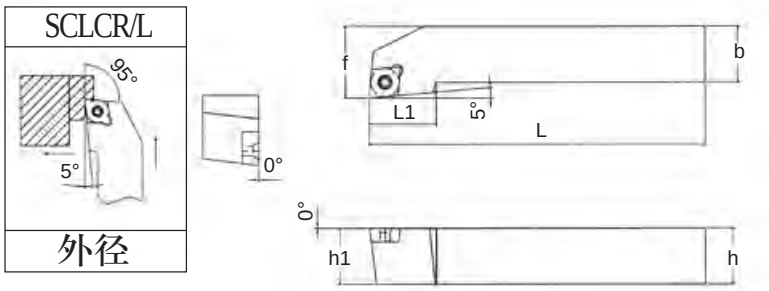

型号 Cat No	刀 片 Insert	适用条件 Application						配 件 Parts	
		h	b	L	L1	h1	f	螺钉 Screw	扳手 Wrench
SCLCR／L1010H06	CC□□0602□□	10	10	100	12	10	12	M2.5*6	T—8
SCLCR／L1212H09	CC□□09T3□□	12	12	100	16	12	16	M3.5*8	T—15
SCLCR／L1616H09		16	16	100	16	16	20		
SCLCR／L2020K09		20	20	125	16	20	25		
SCLCR／L2525M09		25	25	150	16	25	32		
SCLCR／L2020K12	CC□□1204□□	20	20	125	20	20	25	M5*12	T—20
SCLCR／L2525M12		25	25	150	20	25	32		
SCLCR／L3232P12		32	32	170	20	32	40		

SCFCR／L

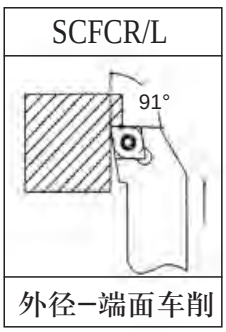

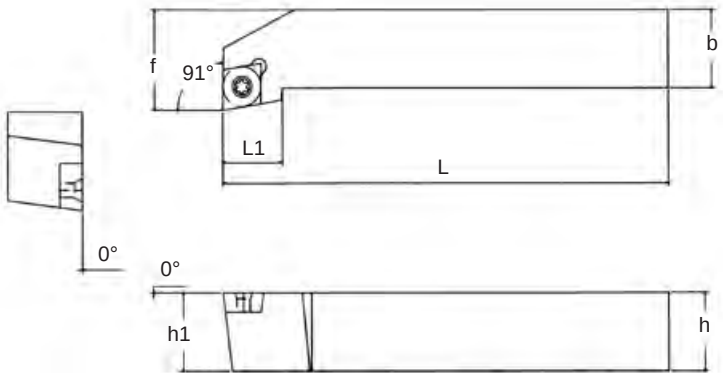

型号 Cat No	刀 片 Insert	适用条件 Application						配 件 Parts	
		h	b	L	L1	h1	f	螺钉 Screw	扳手 Wrench
SCFCR／L1212H06	CC□□0602□□	12	12	100	16	12	16	M2.5*6	T—8
SCFCR／L1616H09	CC□□09T3□□	16	16	100	20	16	20	M3.5*8	T—15
SCFCR／L2020K09		20	20	125	20	20	25		
SCFCR／L2525M12	CC□□1204□□	25	25	150	25	25	32	M5*12	T—20
SCFCR／L3232P12		32	32	170	25	32	40		

SCMCN

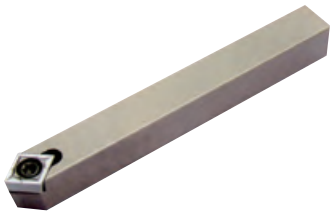

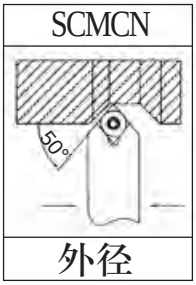

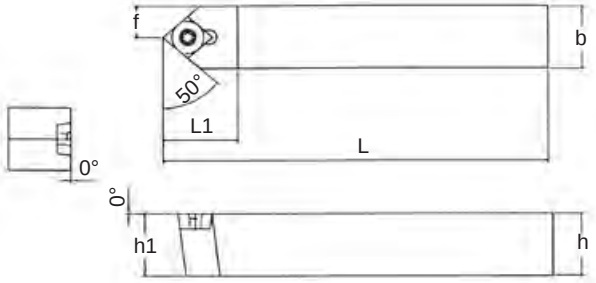

型号 Cat No	刀 片 Insert	适用条件 Application						配 件 Parts	
		h	b	L	L1	h1	f	螺钉 Screw	扳手 Wrench
SCMCN1010H06	CC□□0602□□	10	10	100	13	10	5	M2.5*6	T-8
SCMCN1212H09	CC□□09T3□□	12	12	100	18	12	6	M3.5*8	T-15
SCMCN1616H09		16	16	100	18	16	8		
SCMCN2020K09		20	20	125	18	20	10		
SCMCN2525M09		25	25	150	18	25	12.5		
SCMCN2020K12	CC□□1204□□	20	20	125	23	20	10	M5*12	T-20
SCMCN2525M12		25	25	150	23	25	12.5		

SDJCR/L



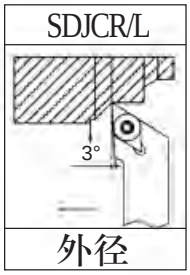

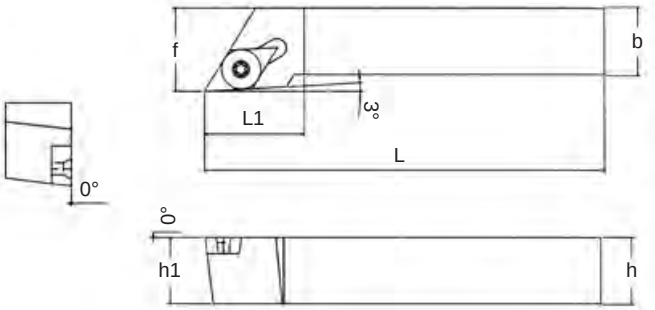

型号 Cat No	刀 片 Insert	适用条件 Application						配 件 Parts	
		h	b	L	L1	h1	f	螺钉 Screw	扳手 Wrench
SDJCR/L1010H07	DC□□0702□□	10	10	100	14	10	12	M2.5*6	T-8
SDJCR/L1212H07		12	12	100	14	12	16		
SDJCR/L1616H07		16	16	100	14	16	20		
SDJCR/L1212H11	DC□□11T3□□	12	12	100	20	12	16	M3.5*8	T-15
SDJCR/L1616H11		16	16	100	20	16	20		
SDJCR/L2020K11		20	20	125	20	20	25		
SDJCR/L2525M11		25	25	150	22	25	32		
SDJCR/L3232P11		32	32	170	23	32	40		
SDJCR/L4040R11		40	40	200	25	40	50		

SDFCR/L



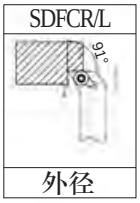

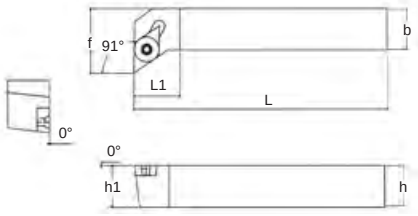

型号 Cat No	刀 片 Insert	适用条件 Application						配 件 Parts	
		h	b	L	L1	h1	f	螺钉 Screw	扳手 Wrench
SDFCR/L1212H07	DC□□0702□□	12	12	100	8	12	16	M2.5*8	T-8
SDFCR/L1616K11	DC□□11T3□□	16	16	125	14	16	20	M3.5*8	T-15

SDQCR/L



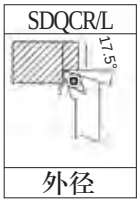

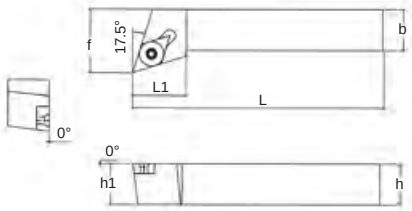

型号 Cat No	刀 片 Insert	适用条件 Application						配 件 Parts	
		h	b	L	L1	h1	f	螺钉 Screw	扳手 Wrench
SDQCR/L1010H07	DC□□0702□□	10	10	100	12.5	10	12	M2.5*6	T-8
SDQCR/L1212H07		12	12	100	13	12	16		
SDQCR/L1212H11	DC□□11T3□□	12	12	100	14	12	16	M3.5*8	T-15
SDQCR/L1616H11		16	16	100	14	16	20		
SDQCR/L2020K11		20	20	125	16	20	25		
SDQCR/L2525M11		25	25	150	22	25	32		

SDNCN



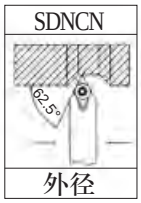

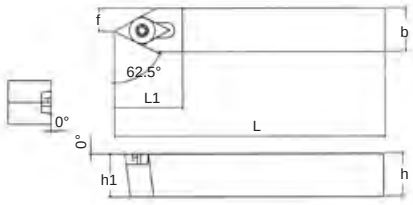

型号 Cat No	刀 片 Insert	适用条件 Application						配 件 Parts	
		h	b	L	L1	h1	f	螺钉 Screw	扳手 Wrench
SDNCN0808H07	DC□□0702□□	8	8	100	14	8	4	M2.5*6	T-8
SDNCN1010H07		10	10	100	14	10	5		
SDNCN1212H07		12	12	100	14	12	6		
SDNCN1212H11	DC□□11T3□□	12	12	100	21	12	6	M3.5*8	T-15
SDNCN1616H11		16	16	100	21	16	8		
SDNCN2020K11		20	20	125	21	20	10		
SDNCN2525M11		25	25	150	21	25	12.5		

SSBCR/L

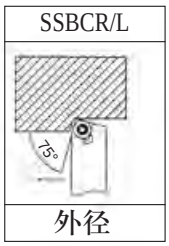

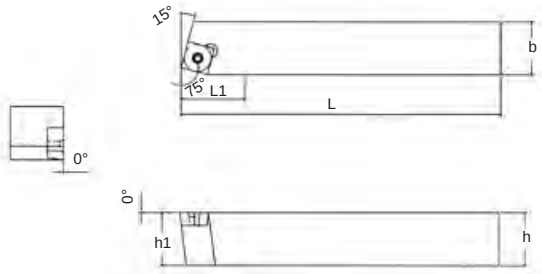

型号 Cat No	刀 片 Insert	适用条件 Application						配 件 Parts	
		h	b	L	L1	h1	f	螺钉 Screw	扳手 Wrench
SSBCR/L1212H09	SC□□09T3□□	12	12	100	14	12	9.5	M3.5*8	T-15
SSBCR/L1616H09		16	16	100	14	16	12		
SSBCR/L2020K12	SC□□1204□□	20	20	125	32	20	17	M5*12	T-20
SSBCR/L2525M12		25	25	150	32	25	22		

SSDCN



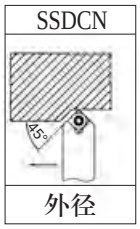

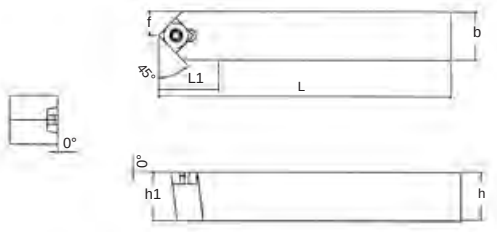

型号 Cat No	刀 片 Insert	适用条件 Application						配 件 Parts	
		h	b	L	L1	h1	f	螺钉 Screw	扳手 Wrench
SSDCN1212H09	SC□□09T3□□	12	12	100	16	12	6	M3.5*8	T-15
SSDCN1616H09		16	16	100	16	16	8		
SSDCN2020K09		20	20	125	16	20	10		
SSDCN2525M09		25	25	150	16	25	12.5		

STGCR/L



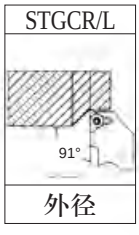

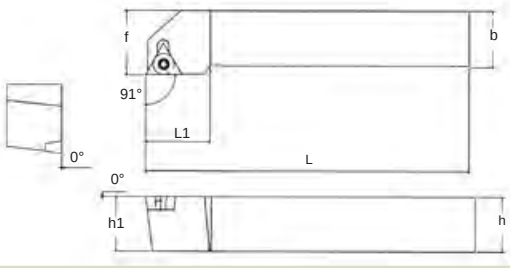

型号 Cat No	刀 片 Insert	适用条件 Application						配 件 Parts	
		h	b	L	L1	h1	f	螺钉 Screw	扳手 Wrench
STGCR/L1616H11	TC□□1102□□	16	16	100	14	16	20	M2.5*6	T-8
STGCR/L2020K16	TC□□16T3□□	20	20	125	20	20	25	M3.5*8	T-15
STGCR/L2525M16		25	25	150	20	25	32		

STFCR/L



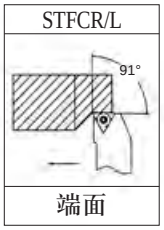

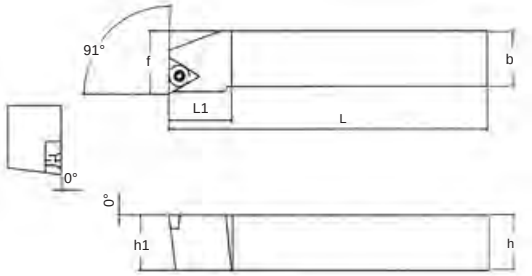

型号 Cat No	刀 片 Insert	适用条件 Application						配 件 Parts	
		h	b	L	L1	h1	f	螺钉 Screw	扳手 Wrench
STFCR/L1212H11	TC□□1102□□	12	12	100	14	12	16	M2.5*6	T-8
STFCR/L1616H11		16	16	100	14	16	20		
STFCR/L2020K16	TC□□16T3□□	20	20	125	22	20	25	M3.5*8	T-15
STFCR/L2525M16		25	25	150	22	25	32		

SVJCR/L





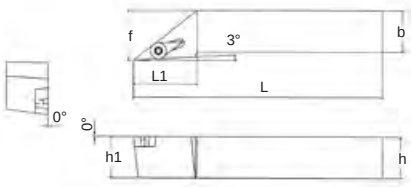

型号 Cat No	刀 片 Insert	适用条件 Application						配 件 Parts	
		h	b	L	L1	h1	f	螺钉 Screw	扳手 Wrench
SVJCR/L1616H16	VC□□1604□□	16	16	100	32	16	20	M3.5*8	T-15
SVJCR/L2020K16		20	20	125	32	20	25		
SVJCR/L2525M16		25	25	150	40	25	32		
SVJCR/L3232P16		32	32	170	40	32	40		

SVVCN



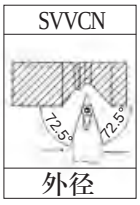

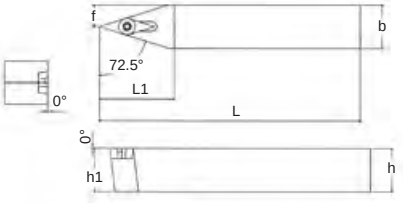

型号 Cat No	刀 片 Insert	适用条件 Application						配 件 Parts	
		h	b	L	L1	h1	f	螺钉 Screw	扳手 Wrench
SVVCN1616H11	VC□□1103□□	16	16	100	24	16	8	M2.5*6	T-8
SVVCN2020K11		20	20	125	24	20	10		
SVVCN2525M11		25	25	150	24	25	12.5		
SVVCN1616H16	VC□□1604□□	16	16	100	34	16	8	M3.5*8	T-15
SVVCN2020K16		20	20	125	34	20	10		
SVVCN2525M16		25	25	150	34	25	12.5		
SVVCN3232P16		32	32	170	34	32	16		

杠杆型外圆刀杆（P系列）EXTERNAL TURNING TOOLS

PCLNR/L

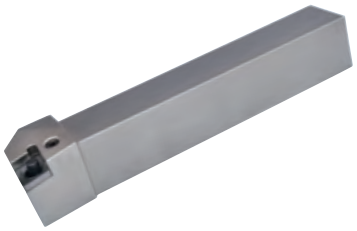

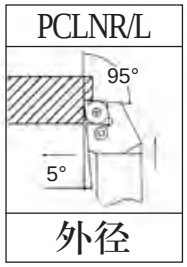

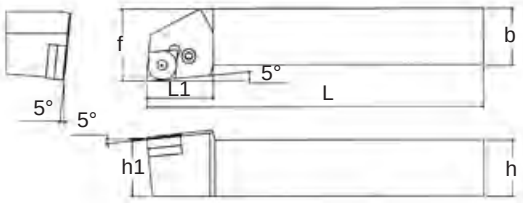

型号 Cat No	刀 片 Insert	适用条件 Application						配 件 Parts				
		h	b	L	L1	h1	f	杠杆 Level	螺钉 Screw	垫片 Shim	垫销 Pin	扳手 Wrench
PCLNR/L2020K12	CN□□1204□□	20	20	125	28	20	25	0513	0820	1203	0606	L3
PCLNR/L2525M12		25	25	150	28	25	32					
PCLNR/L3232P12		32	32	170	28	32	40					
PCLNR/L2525M16	CN□□1606□□	25	25	150	33	25	32	0516	0824	1604	0808	
PCLNR/L3232P16		32	32	170	33	32	40					
PCLNR/L3232P19	CN□□1906□□	32	32	170	38	32	40	0720	1027	1904	0909	L4

PCBNR/L

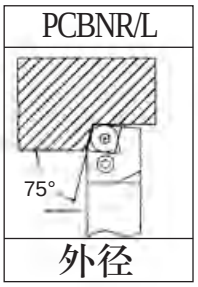

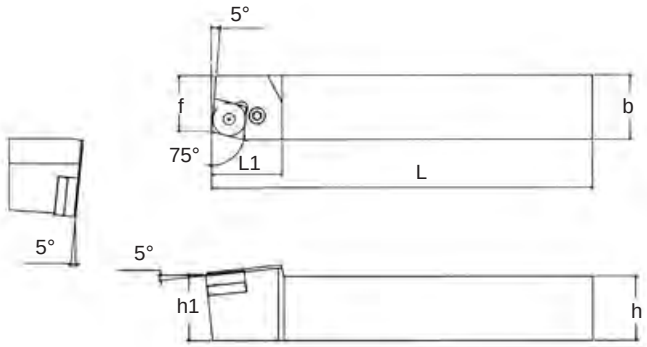

型号 Cat No	刀 片 Insert	适用条件 Application						配 件 Parts				
		h	b	L	L1	h1	f	杠杆 Level	螺钉 Screw	垫片 Shim	垫销 Pin	扳手 Wrench
PCBNR/L2020K12	CN□□1204□□	20	20	125	28	20	17	0513	0820	1203	0606	L3
PCBNR/L2525M12		25	25	150	28	25	22					
PCBNR/L3232P12		32	32	170	28	32	27					
PCBNR/L2525M16	CN□□1606□□	25	25	150	33	25	22	0516	0824	1604	0808	
PCBNR/L3232P16		32	32	170	33	32	25					
PCBNR/L3232P19	CN□□1906□□	32	32	170	38	32	24	0720	1027	1904	0909	L4

PDJNR／L

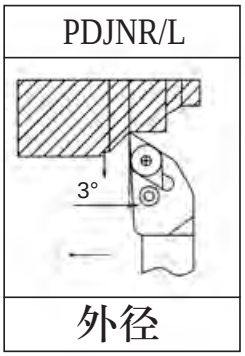

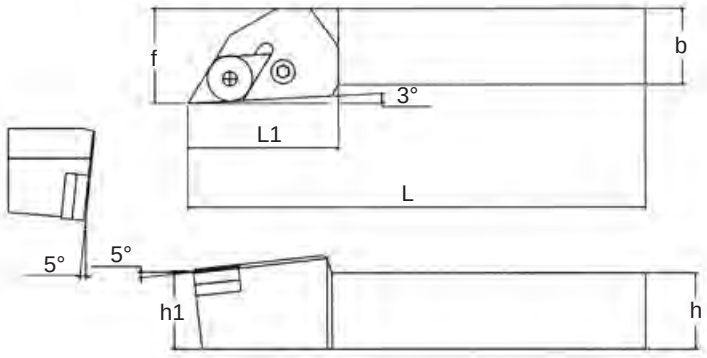

型号 Cat No	刀 片 Insert	适用条件 Application						配 件 Parts				
		h	b	L	L1	h1	f	杠杆 Level	螺钉 Screw	垫片 Shim	垫销 Pin	扳手 Wrench
PDJNR／L1616H11	DN□□1104□□	16	16	100	25	16	20	0310	0617	1103	0505	L2.5
PDJNR／L2020K11		20	20	125	25	20	25					
PDJNR／L2525M11		25	25	150	30	25	32					
PDJNR／L2020K15	DN□□1506□□	20	20	125	35	20	25	0516	0820	1504	0606	L3
PDJNR／L2525M15		25	25	150	35	25	32					
PDJNR／L3232P15		32	32	170	35	32	40					

PDPNN





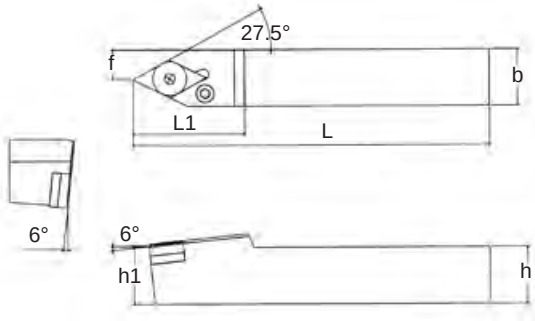

型号 Cat No	刀 片 Insert	适用条件 Application						配 件 Parts				
		h	b	L	L1	h1	f	杠杆 Level	螺钉 Screw	垫片 Shim	垫销 Pin	扳手 Wrench
PDPNN2020K15	DN□□1506□□	20	20	125	37	20	10	0516	0820	1504	0606	L3
PDPNN2525M15		25	25	150	37	25	12.5					
PDPNN3225P15		32	25	170	37	32	12.5					
PDPNN4032S15		40	32	250	37	40	16					

PSBNR／L



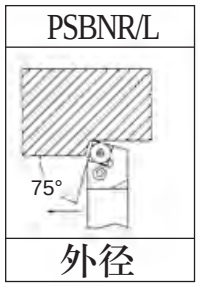

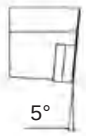

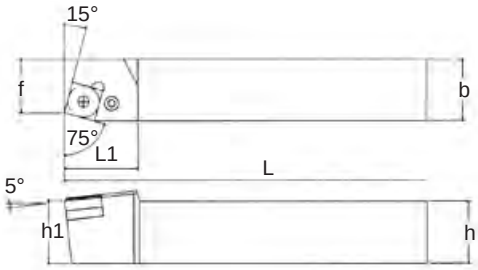

型号 Cat No	刀 片 Insert	适用条件 Application						配 件 Parts				
		h	b	L	L1	h1	f	杠杆 Level	螺钉 Screw	垫片 Shim	垫销 Pin	扳手 Wrench
PSBNR／L2020K12	SN□□1204□□	20	20	125	28	20	17	0513	0820	1203	0606	L3
PSBNR／L2525M12		25	25	150	28	25	22					
PSBNR／L3232P12		32	32	170	28	32	27					
PSBNR／L2525M15	SN□□1506□□	25	25	150	33	25	22	0516	0824	1504	0808	
PSBNR／L3232P15		32	32	170	33	32	27					
PSBNR／L3232P19	SN□□1906□□	32	32	170	42	32	27	0720	1027	1904	0909	L4
PSBNR／L4040S19		40	40	250	42	40	35					
PSBNR／L4040S25	SN□□2509□□	40	40	250	48	40	35	0925	1237	2506	1312	L5
PSBNR／L5050T25		50	50	300	48	50	43					

PSDNN



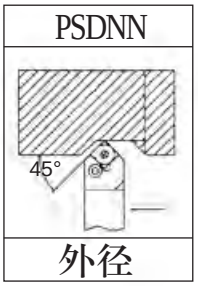



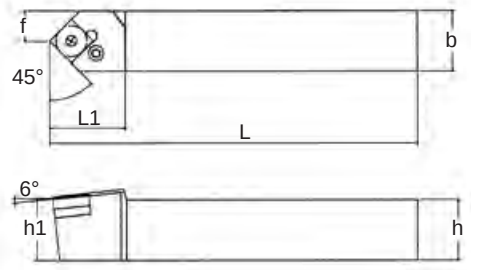

型号 Cat No	刀 片 Insert	适用条件 Application						配 件 Parts				
		h	b	L	L1	h1	f	杠杆 Level	螺钉 Screw	垫片 Shim	垫销 Pin	扳手 Wrench
PSDNN2020K12	SN□□1204□□	20	20	125	30	20	10	0513	0820	1203	0606	L3
PSDNN2525M12		25	25	150	36	25	12.5					
PSDNN3232P12		32	32	170	40	32	16.5					
PSDNN2525M15	SN□□1506□□	25	25	150	36	25	12.5	0516	0825	1504	0808	
PSDNN3232P15		32	32	170	45	32	16.5					
PSDNN3232P19	SN□□1906□□	32	32	170	45	32	16.5	0726	1027	1904	0909	L4
PSDNN4040S19		40	40	250	50	40	20					
PSDNN4040S25	SN□□2509□□	40	40	250	50	40	20	0925	1237	2506	1312	L5
PSDNN5050T25		50	50	300	55	50	25					

PSKNR／L

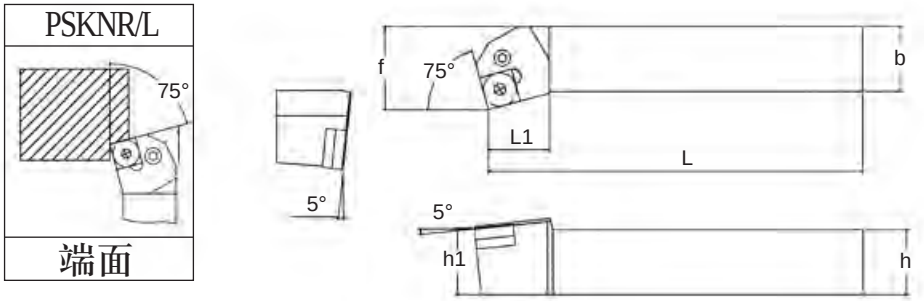

型号 Cat No	刀片 Insert	适用条件 Application						配件 Parts				
		h	b	L	L1	h1	f	杠杆 Level	螺钉 Screw	垫片 Shim	垫销 Pin	扳手 Wrench
PSKNR／L2020K12	SN□□1204□□	20	20	125	26	20	25	0513	0820	1203	0606	L3
PSKNR／L2525M12		25	25	150	26	25	32					
PSKNR／L3232P12		32	32	170	26	32	40					
PSKNR／L2525M15	SN□□1506□□	25	25	150	32	25	32	0516	0825	1504	0808	
PSKNR／L3232P15		32	32	170	32	32	40					
PSKNR／L3232P19	SN□□1906□□	32	32	170	36	32	40	0726	1027	1904	0909	L4
PSKNR／L4040S19		40	40	250	40	40	50					
PSKNR／L4040S25	SN□□2509□□	40	40	250	44	40	50	0925	1237	2506	1312	L5
PSKNR／L5050T25		50	50	300	46	50	60					

PSSNR／L

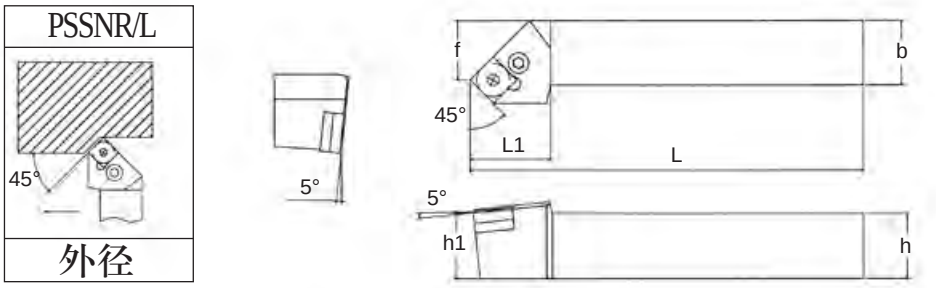

型号 Cat No	刀片 Insert	适用条件 Application						配件 Parts				
		h	b	L	L1	h1	f	杠杆 Level	螺钉 Screw	垫片 Shim	垫销 Pin	扳手 Wrench
PSSNR／L2020K12	SN□□1204□□	20	20	125	30	20	25	0513	0820	1203	0606	L3
PSSNR／L2525M12		25	25	150	36	25	32					
PSSNR／L3232P12		32	32	170	40	32	40					
PSSNR／L2525M15	SN□□1506□□	25	25	150	36	25	32	0516	0825	1504	0808	
PSSNR／L3232P15		32	32	170	45	32	40					
PSSNR／L3232P19	SN□□1906□□	32	32	170	45	32	40	0726	1027	1904	0909	L4
PSSNR／L4040S19		40	40	250	50	40	50					
PSSNR／L4040S25	SN□□2509□□	40	40	250	50	40	50	0925	1237	2506	1312	L5
PSSNR／L5050T25		50	50	300	55	50	60					

压板型内孔刀杆 INTERNAL TURNING TOOLS

MCLNR/L



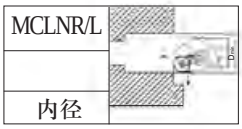

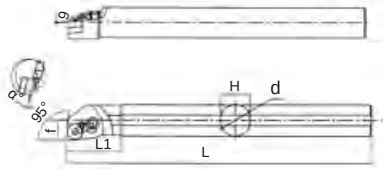

型号 Cat No	刀片 Insert	适用条件 Application							配件 Parts				
		Dmin	d	L	L1	H	f	α°	垫片 Shim	销钉 Lock pin	压板 Clamp	螺钉 Screw	扳手 Wrench
S20R–MCLNR/L12	CN□□1204□□	25	20	200	45	19	13	15	⊗	0614	1811	0620	L2.5 L3.0
S25R–MCLNR/L12		32	25	200	45	24	16.5	12					
S32T–MCLNR/L12		40	32	300	50	30	22.5	17	1204	0617	1814	0625	
S40U–MCLNR/L12		50	40	350	55	38	26	15					
S40U–MCLNR/L16	CN□□1606□□	50	40	350	55	38	26	15	1604	0822	2415	0828	L3.0 L4.0
S50V–MCLNR/L16		60	50	400	65	48	31	12					

MCKNR/L

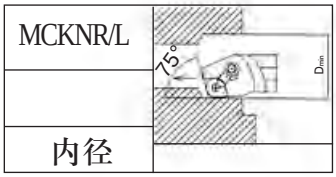

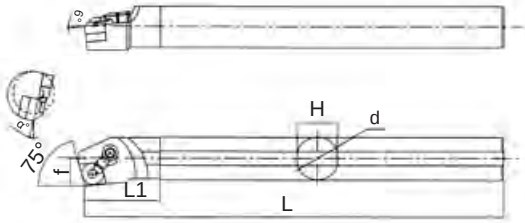

型号 Cat No	刀片 Insert	适用条件 Application							配件 Parts				
		Dmin	d	L	L1	H	f	α°	垫片 Shim	销钉 Lock pin	压板 Clamp	螺钉 Screw	扳手 Wrench
S20R–MCKNR/L12	CN□□1204□□	26	20	200	45	19	14	15	⊗	0614	1811	0620	L2.5 L3.0
S25S–MCKNR/L12		32	25	250	45	24	16	12					
S32T–MCKNR/L12		40	32	300	50	30	22	17	1204	0617	1814	0625	
S40U–MCKNR/L12		50	40	350	55	38	26	15					
S40U–MCKNR/L16	CN□□1606□□	50	40	350	55	38	26	15	1604	0822	2415	0828	L3.0 L4.0
S50V–MCKNR/L16		60	50	400	65	48	31	12					

MTJNR/L



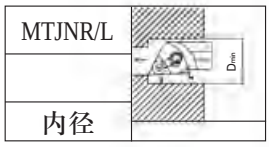

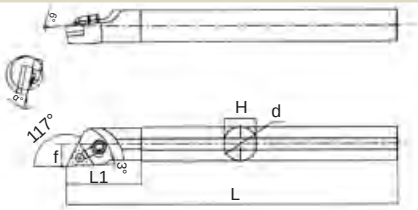

型号 Cat No	刀片 Insert	适用条件 Application							配件 Parts				
		Dmin	d	L	L1	H	f	α°	垫片 Shim	销钉 Lock pin	压板 Clamp	螺钉 Screw	扳手 Wrench
S20R–MTJNR/L16	TN□□1604□□	25	20	200	40	19	13	15	⊗	0511	1811	0620	L2.0 L3.0
S25S–MTJNR/L16		32	25	250	45	24	16	12			1814	0625	
S32T–MTJNR/L16		41	32	300	50	30	22.5	17	1603	0513			

MTFNR／L



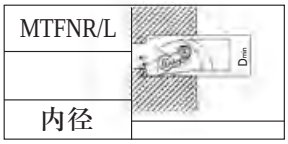

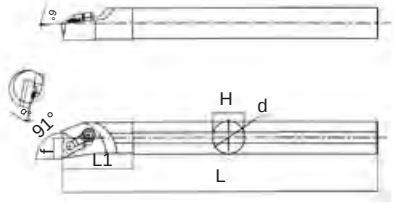

型号 Cat No	刀片 Insert	适用条件 Application							配件 Parts				
		Dmin	d	L	L1	H	f	α°	垫片 Shim	销钉Lock pin	压板 Clamp	螺钉 Screw	扳手 Wrench
S20R–MTFNR／L16	TN□□1604□□	25	20	200	40	19	13	15	⊗	0511	1811	0620	L2.0 L3.0
S25S–MTFNR／L16		32	25	250	45	24	16.5	12			1814	0625	
S32T–MTFNR／L16		41	32	300	54	30	22.5	17	1603	0513			
S40U–MTFNR／L16		50	40	350	60	38	26.5	15					

MWLNR／L



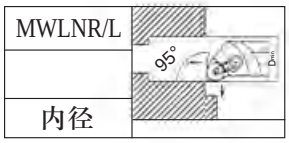

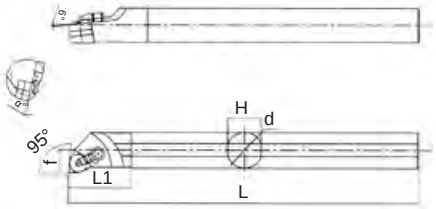

型号 Cat No	刀片 Insert	适用条件 Application							配件 Parts				
		Dmin	d	L	L1	H	f	α°	垫片 Shim	销钉Lock pin	压板 Clamp	螺钉 Screw	扳手 Wrench
S16Q–MWLNR／L06	WN□□0604□□	22	16	180	38	15	11	18	⊗	0511	1611	0520	L2.0 L2.5
S20R–MWLNR／L06		25	20	200	40	19	13	15					
S20R–MWLNR／L08	WN□□0804□□	25	20	200	40	19	13	15		0614	1811	0620	L2.5 L3.0
S25S–MWLNR／L08		32	25	250	45	24	16.5	12			1814	0625	
S32T–MWLNR／L08		41	32	300	50	30	22	17	0804	0617			
S40U–MWLNR／L08		50	40	350	55	38	26	15					

MTUNR／L



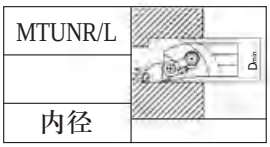

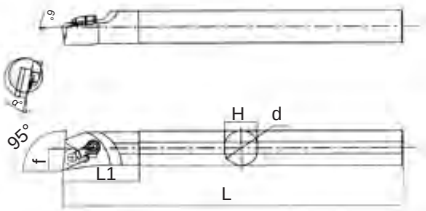

型号 Cat No	刀片 Insert	适用条件 Application							配件 Parts				
		Dmin	d	L	L1	H	f	α°	垫片 Shim	销钉 Lock pin	压板 Clamp	螺钉 Screw	扳手 Wrench
S20R–MTUNR／L16	TN□□1604□□	25	20	200	40	19	13	15	⊗	0511	1811	0620	L2.0 L3.0
S25S–MTUNR／L16		32	25	250	45	24	16.5	12			1814	0625	
S32T–MTUNR／L16		41	32	300	54	30	22.5	17	1603	0513			
S40U–MTUNR／L16		50	40	350	60	38	26.5	15					

DCLNR/L

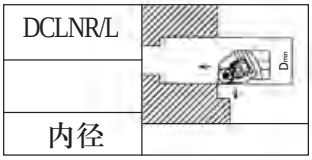

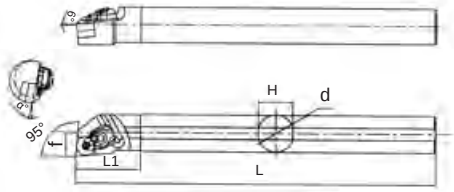

型号 Cat No	刀片 Insert	适用条件 Application							配件 Parts					
		D_{min}	d	L	L1	H	f	α°	垫片 Shim	销钉 Lock pin	压板 Clamp	螺钉 Screw	弹簧 Spring	扳手 Wrench
S20Q–DCLNR/L12	CN□□1204□□	25	20	180	45	19	13	15	⊗	⊗	2214	0520	0710	L4.0
S25R–DCLNR/L12		32	25	200	45	24	16.5	12						
S32S–DCLNR/L12		40	32	250	50	30	22.5	17	1204	0614				
S40T–DCLNR/L12		50	40	300	55	38	26	15						
S50U–DCLNR/L12		60	50	350	65	48	31	12						

DTUNR/L

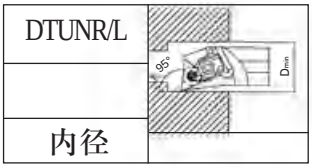

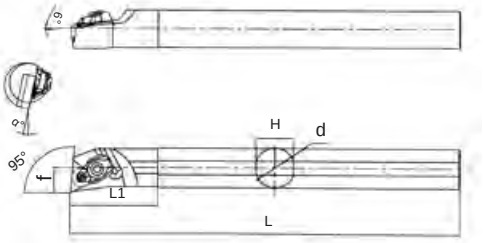

型号 Cat No	刀片 Insert	适用条件 Application							配件 Parts					
		D_{min}	d	L	L1	H	f	α°	垫片 Shim	销钉 Lock pin	压板 Clamp	螺钉 Screw	弹簧 Spring	扳手 Wrench
S20Q–DTUNR/L16	TN□□1604□□	25	20	180	40	19	13	15	⊗	⊗	2313	0520	0710	L4.0
S25R–DTUNR/L16		32	25	200	45	24	16.5	12						
S32S–DTUNR/L16		41	32	250	54	30	22.5	17	1603	0512				
S40T–DTUNR/L16		50	40	300	60	38	26.5	15						

DWLNR/L

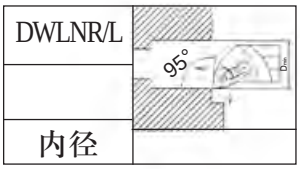

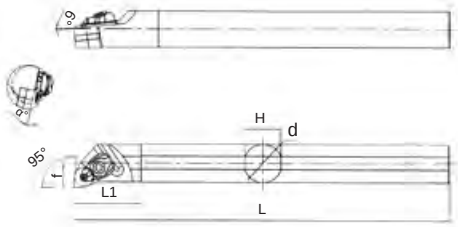

型号 Cat No	刀片 Insert	适用条件 Application							配件 Parts					
		D_{min}	d	L	L1	H	f	α°	垫片 Shim	销钉 Lock pin	压板 Clamp	螺钉 Screw	弹簧 Spring	扳手 Wrench
S16N–DWLNR/L06	WN□□0604□□	22	16	160	38	15	11	18	⊗	⊗	2313	0520	0710	L4.0
S20Q–DWLNR/L06		25	20	180	40	19	13	15						
S20Q–DWLNR/L08	WN□□0804□□	25	20	180	40	19	13	15			2214			
S25R–DWLNR/L08		32	25	200	45	24	16.5	12						
S32S–DWLNR/L08		41	32	250	50	30	22	17	0804	0614				
S40U–DWLNR/L08		50	40	300	55	38	26	15						

DVUNR/L

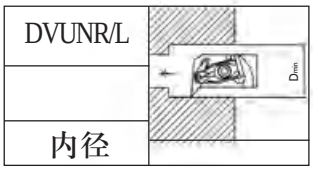

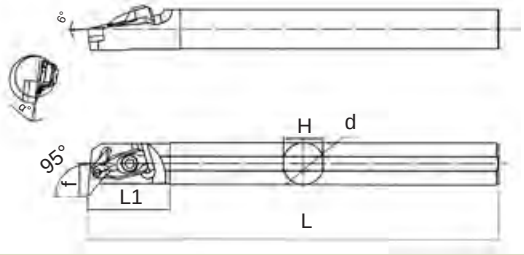

型号 Cat No	刀片 Insert	适用条件 Application							配件 Parts					
		Dmin	d	L	L1	H	f	α°	垫片 Shim	销钉 Lock pin	压板 Clamp	螺钉 Screw	弹簧 Spring	扳手 Wrench
S25R–DVUNR/L16	WN□□1604□□	36	25	200	45	24	20	12	⊗	⊗	2214	0520	0710	L4.0
S32S–DVUNR/L16		42	32	250	50	30	22	17	1603	0512				
S40T–DVUNR/L16		50	40	300	55	38	26	15						

DDUNR/L

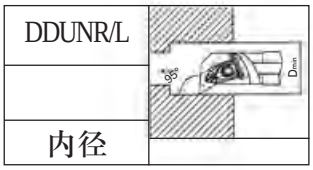

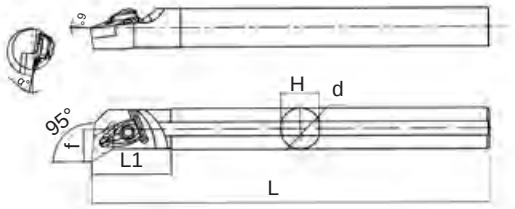

型号 Cat No	刀片 Insert	适用条件 Application							配件 Parts					
		Dmin	d	L	L1	H	f	α°	垫片 Shim	销钉 Lock pin	压板 Clamp	螺钉 Screw	弹簧 Spring	扳手 Wrench
S25R–DDUNR/L16	DN□□1604□□	32	25	200	45	24	17	12	⊗	⊗	2514	0520	0710	L4.0
S32S–DDUNR/L16		42	32	250	50	30	22.5	17	1506	0614				
S40T–DDUNR/L16		50	40	300	60	38	26	15	1504					

DDZNR/L

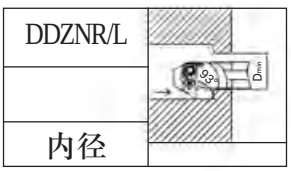

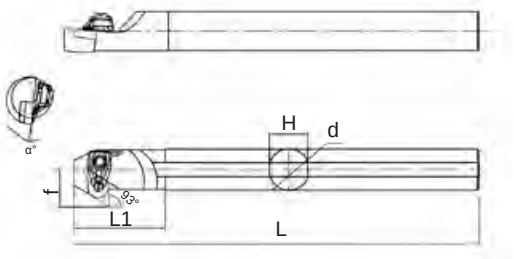

型号 Cat No	刀片 Insert	适用条件 Application							配件 Parts					
		Dmin	d	L	L1	H	f	α°	垫片 Shim	销钉 Lock pin	压板 Clamp	螺钉 Screw	弹簧 Spring	扳手 Wrench
S32S–DDZNR/L16	DN□□1604□□	40	32	250	50	30	22	17	⊗	0614	2514	0520	0710	L4.0
S40T–DDZNR/L16		50	40	300	55	38	27	15	1506					
S50U–DDZNR/L16		60	50	350	70	48	32	12	1504					

螺钉型内孔刀杆 INTERNAL TURNING TOOLS

SCLCR/L



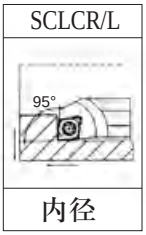

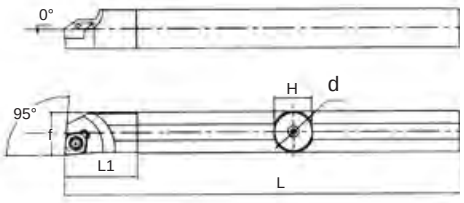

型号 Cat No	刀 片 Insert	适用条件 Application							配 件 Parts	
		D_{min}	d	f	L	L1	H	α°	螺钉 Screw	扳手 Wrench
S07K–SCLCR/L06	CC□□0602□□	9	7	4.5	125	20	6	15	M2.5*6	T–8
S08K–SCLCR/L06		10	8	5	125	20	7	13		
S10K–SCLCR/L06		13	10	6	125	22	9	12		
S12M–SCLCR/L06		16	12	7	150	23	11	10		
S12M–SCLCR/L09	CC□□09T3□□	16	12	7.5	150	27	11	12	M3.5*8	T–15
S16N–SCLCR/L09		20	16	9.5	160	30	15	10		
S20Q–SCLCR/L09		25	20	11.5	180	35	19	8		
S25R–SCLCR/L09		31	25	14	200	40	24	6		
S32S–SCLCR/L09		39	32	17.5	250	45	30	4		

SCZCR/L



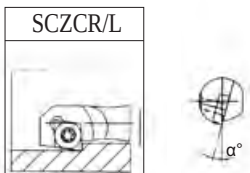

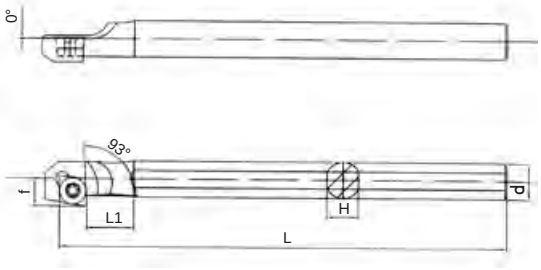

型号 Cat No	刀 片 Insert	适用条件 Application							配 件 Parts	
		D_{min}	d	f	L	L1	H	α°	螺钉 Screw	扳手 Wrench
S08K–SCZCR/L06	CC□□0602□□	12.5	8	6.5	125	25	7	13	M2.5*6	T–8
S10K–SCZCR/L06		14	10	7.5	125	27	9	12		
S12M–SCZCR/L06		16	12	8.5	150	30	11	10		
S16N–SCZCR/L09	CC□□09T3□□	20	16	10.5	160	35	15	10	M3.5*8	T–15
S20Q–SCZCR/L09		25	20	13.5	180	40	19	8		
S25R–SCZCR/L09		32	25	16	200	42	24	6		

SDUCR/L



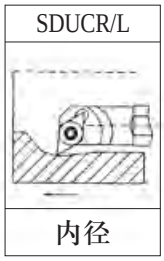

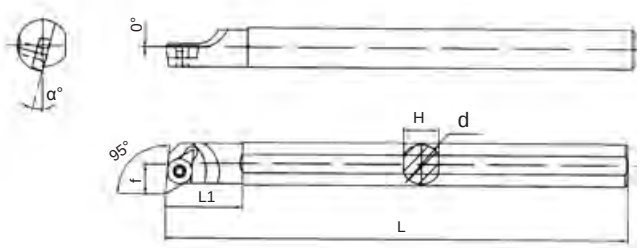

型号 Cat No	刀片 Insert	适用条件 Application							配件 Parts	
		D_{min}	d	f	L	L1	H	α°	螺钉 Screw	扳手 Wrench
S10K–SDUCR/L07	DC□□0702□□	15	10	8	125	25	9	10	M2.5*6	T–8
S12M–SDUCR/L07		17	12	9	150	28	11	8		
S16N–SDUCR/L07		22	16	11	160	30	15	6		
S20Q–SDUCR/L11	DC□□11T3□□	25	20	13	180	40	19	6	M3.5*8	T–15
S25R–SDUCR/L11		32	25	16	200	40	24	4		
S32S–SDUCR/L11		39	32	20	250	45	30	4		
S40T–SDUCR/L11		50	40	24	300	50	38	2		
S50U–SDUCR/L11		60	50	29	350	55	48	0		

SDZCR/L



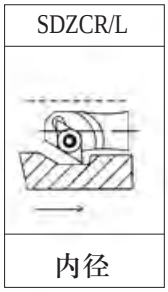

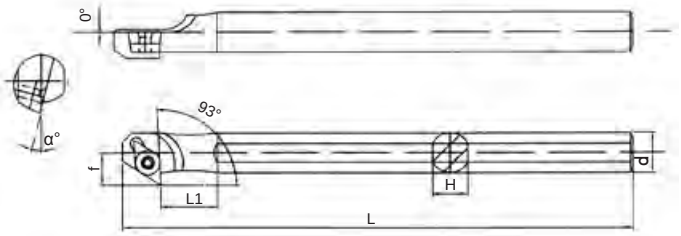

型号 Cat No	刀片 Insert	适用条件 Application							配件 Parts	
		D_{min}	d	f	L	L1	H	α°	螺钉 Screw	扳手 Wrench
S10K–SDZCR/L07	DC□□0702□□	16	10	8	125	28	9	12	M2.5*6	T–8
S12M–SDZCR/L07		18	12	9	150	30	11	10		
S16N–SDZCR/L07		24	16	11	160	30	15	8		
S20Q–SDZCR/L11	DC□□11T3□□	28	20	13	180	40	19	8	M3.5*8	T–15
S25R–SDZCR/L11		34	25	16	200	45	24	6		
S32S–SDZCR/L11		38	32	20.5	250	50	30	4		

STFCR／L



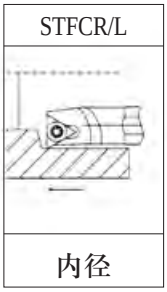

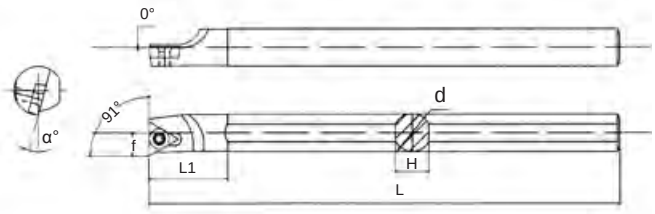

型号 Cat No	刀 片 Insert	适用条件 Application							配 件 Parts	
		D_{min}	d	f	L	L1	H	α°	螺钉 Screw	扳手 Wrench
S08K–STFCR／L09	TC□□0902□□	10	8	5	125	23	7	15	M2.5*6	T–8
S10K–STFCR／L09		13	10	6	125	24	9	13		
S12M–STFCR／L09		16	12	7	150	27	11	10		
S10K–STFCR／L11	TC□□1102□□	13.5	10	6	125	24	9	12		
S12M–STFCR／L11		16	12	7	150	27	11	10		
S16N–STFCR／L11		20	16	9	160	30	15	8		
S20Q–STFCR／L11		25	20	11	180	35	19	6		
S20Q–STFCR／L16	TC□□1102□□	25	20	11.5	180	40	19	8	M3.5*8	T–15
S25R–STFCR／L16		31	25	14	200	40	24	6		
S32S–STFCR／L16		39	32	17.5	250	45	30	4		

STUCR／L



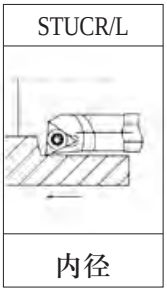

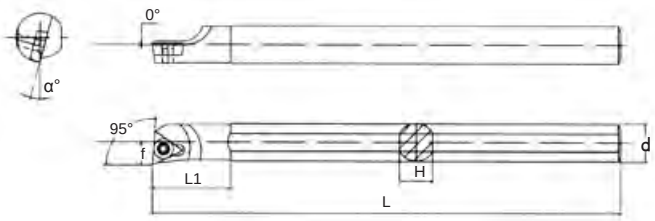

型号 Cat No	刀 片 Insert	适用条件 Application							配 件 Parts	
		D_{min}	d	f	L	L1	H	α°	螺钉 Screw	扳手 Wrench
S08K–STUCR／L09	TC□□0902□□	10	8	5	125	23	7	15	M2.5*6	T–8
S10K–STUCR／L09		13	10	6	125	24	9	13		
S10K–STUCR／L11	TC□□1102□□	13.5	10	6	125	24	9	12		
S12M–STUCR／L11		16	12	7	150	27	11	10		
S16N–STUCR／L11		20	16	9	160	30	15	8		
S20Q–STUCR／L11		25	20	11	180	35	19	6		
S25R–STUCR／L11		31	25	13.5	200	40	24	4		
S20Q–STUCR／L16	TC□□16T3□□	25	20	11.5	180	40	19	8	M3.5*8	T–15
S25R–STUCR／L16		31	25	14	200	40	24	6		
S32S–STUCR／L16		39	32	17.5	250	45	30	4		

SSKCR/L



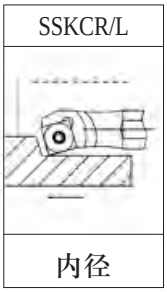

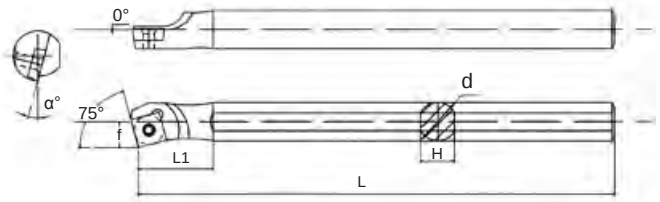

型号 Cat No	刀 片 Insert	适用条件 Application							配 件 Parts	
		Dmin	d	f	L	L1	H	α°	螺钉 Screw	扳手 Wrench
S12M–SSKCR/L09	SC□□09T3□□	16	12	8.5	150	30	11	12	M3.5*8	T–15
S16N–SSKCR/L09		20	16	10.5	160	30	15	10		
S20Q–SSKCR/L09		24	20	12.5	180	40	19	8		
S25R–SSKCR/L09		31	25	15	200	40	24	6		

SVUCR/L



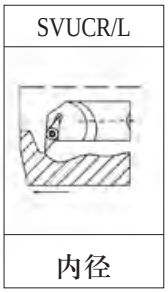

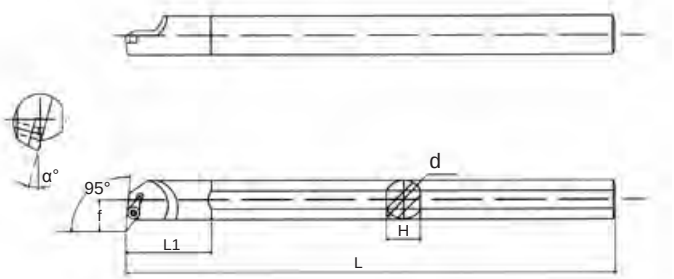

型号 Cat No	刀 片 Insert	适用条件 Application							配 件 Parts	
		Dmin	d	f	L	L1	H	α°	螺钉 Screw	扳手 Wrench
S16N–SVUCR/L11	VC□□1103□□	22	16	11.5	160	30	15	8	M2.5*6	T–8
S20Q–SVUCR/L11		27	20	14	180	32	19	6		
S20Q–SVUCR/L16	VC□□1604□□	31	20	19	180	50	19	8	M3.5*8	T–15
S25R–SVUCR/L16		35	25	20	200	50	24	6		
S32S–SVUCR/L16		42	32	22.5	250	50	30	8		
S40T–SVUCR/L16		51	40	27	300	55	38	6		
S50U–SVUCR/L16		60	50	32	350	65	48	4		

SVZCR／L



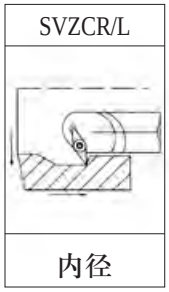

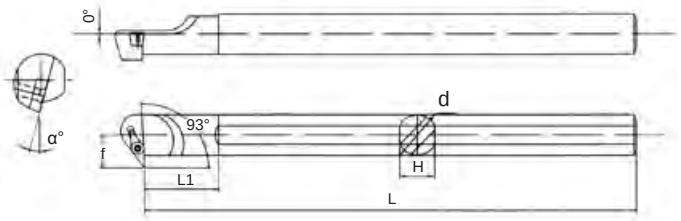

型号 Cat No	刀 片 Insert	适用条件 Application							配 件 Parts	
		Dmin	d	f	L	L1	H	α°	螺钉 Screw	扳手 Wrench
S16N–SVZCR／L11	VC□□1103□□	22	16	11.5	160	34	15	8	M2.5*6	T–8
S20Q–SVZCR／L11		27	20	14	180	38	19	6		
S25R–SVZCR／L16	VC□□1604□□	34	25	19.5	200	50	24	6	M3.5*8	T–15
S32S–SVZCR／L16		42	32	23.5	250	50	30	8		
S40T–SVZCR／L16		50	40	27	300	60	38	6		
S50U–SVZCR／L16		60	50	31.5	350	65	48	4		

SWLCR／L



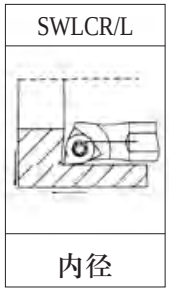

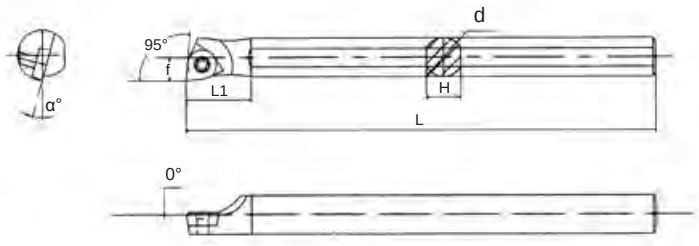

型号 Cat No	刀 片 Insert	适用条件 Application							配 件 Parts	
		Dmin	d	f	L	L1	H	α°	螺钉 Screw	扳手 Wrench
S08K–SWLCR／L04	WC□□0402□□	10	8	5	125	25	7	13	M2.5*6	T–8
S10K–SWLCR／L04		13	10	6.5	125	30	9	10		
S12M–SWLCR／L06	WC□□06T3□□	16	12	7.5	150	37	11	13	M3.5*8	T–15
S16N–SWLCR／L06		20	16	9.5	160	40	15	10		
S20Q–SWLCR／L06		25	20	11.5	180	40	19	8		
S25R–SWLCR／L06		31	25	14	200	40	24	6		

杠杆型内孔刀杆 INTERNAL TURNING TOOLS

PCLNR/L

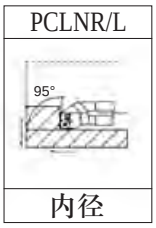

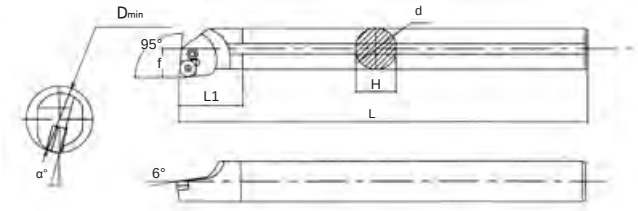

型号 Cat No	刀 片 Insert	适用条件 Application							配 件 Parts				
		Dmin	d	H	L	L1	f	α°	杠杆 Level	螺钉 Screw	垫片 Shim	垫销 Pin	扳手 Wrench
S20R–PCLNR/L09	CN□□0903□□	25	20	19	200	32	13	11	0513	0820	0903	0606	L3
S25S–PCLNR/L12	CN□□1204□□	32	25	24	250	40	17	12	0513	0820	1203	0606	
S32T–PCLNR/L12		40	32	30	300	50	22	11					
S40T–PCLNR/L12		50	40	38	300	55	27	10					

PWLNR/L

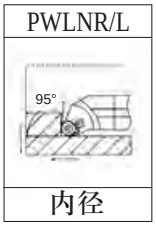

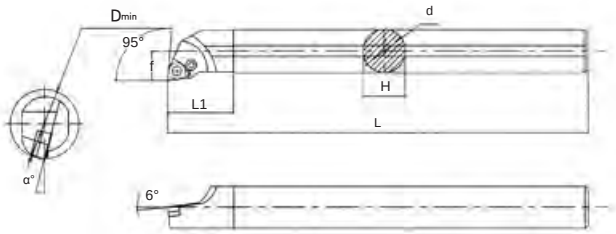

型号 Cat No	刀 片 Insert	适用条件 Application							配 件 Parts				
		Dmin	d	H	L	L1	f	α°	杠杆 Level	螺钉 Screw	垫片 Shim	垫销 Pin	扳手 Wrench
S20R–PWLNR/L08	WN□□0804□□	25	20	19	200	40	13	12	0513	0820	0803	0606	L3
S25S–PWLNR/L08		32	25	24	250	40	17	12					
S32T–PWLNR/L08		40	32	30	300	50	22	10					
S40T–PWLNR/L08		54	40	38	300	55	27	10					

PSKNR/L

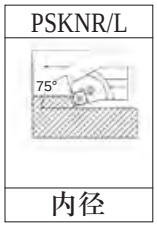

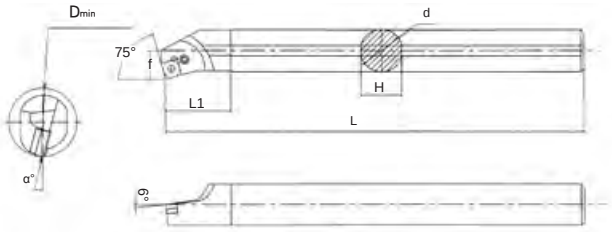

型号 Cat No	刀 片 Insert	适用条件 Application							配 件 Parts				
		Dmin	d	H	L	L1	f	α°	杠杆 Level	螺钉 Screw	垫片 Shim	垫销 Pin	扳手 Wrench
S20R–PSKNR/L09	SN□□0903□□	25	20	19	200	40	13	12	0310	0617	0903	0505	L2.5
S25S–PSKNR/L12	SN□□1204□□	32	25	24	250	42	17	12	0513	0820	1203	0606	L3
S32T–PSKNR/L12		40	32	30	300	45	22	12					
S40T–PSKNR/L12		50	40	38	300	50	27	12					

PTFNR／L

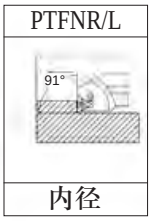

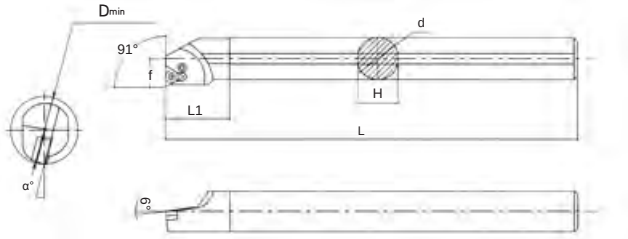

型号 Cat No	刀片 Insert	适用条件 Application							配件 Parts				
		Dmin	d	H	L	L1	f	α°	杠杆 Level	螺钉 Screw	垫片 Shim	垫销 Pin	扳手 Wrench
S20R—PTFNR／L16	TN□□1604□□	25	20	19	200	33	13	12	0310	0617	1603	0505	L2.5
S25S—PTFNR／L16		32	25	24	250	42	17	12					
S32T—PTFNR／L16		44	32	30	300	50	22	10					
S40T—PTFNR／L16		54	40	38	300	55	27	10					

PDUNR／L

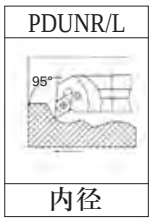

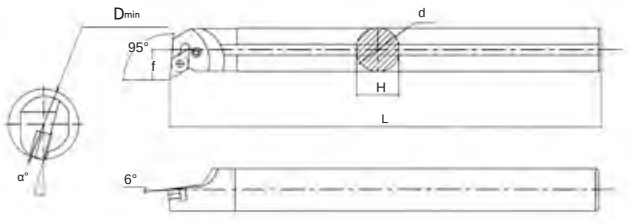

型号 Cat No	刀片 Insert	适用条件 Application							配件 Parts				
		Dmin	d	H	L	L1	f	α°	杠杆 Level	螺钉 Screw	垫片 Shim	垫销 Pin	扳手 Wrench
S20R—PDUNR／L11	DN□□1104□□	25	20	19	200	30	13	11	0310	0617	1103	0505	L2.5
S25S—PDUNR／L15	DN□□1506□□	32	25	24	250	35	17	13	0516	0820	1503	0606	L3
S32T—PDUNR／L15		40	32	30	300	40	22	16					
S40T—PDUNR／L15		50	40	38	300	50	27	11					

PDSNR／L

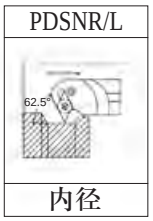

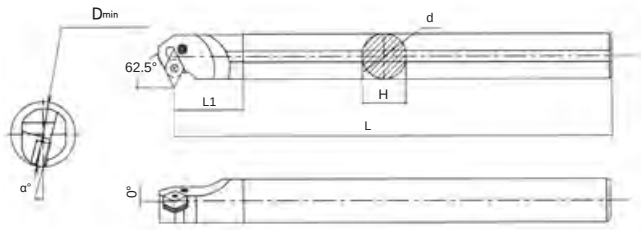

型号 Cat No	刀片 Insert	适用条件 Application							配件 Parts				
		Dmin	d	H	L	L1	f	α°	杠杆 Level	螺钉 Screw	垫片 Shim	垫销 Pin	扳手 Wrench
S32T—PDSNR／L16	DN□□1506□□	40	32	30	300	45	22	11	0516	0820	1503	0606	L3
S40T—PDSNR／L16		50	40	38	300	43	27	11					

切断、切槽刀杆 TOOL HOLDER FOR GROOVING

MGEHR／L



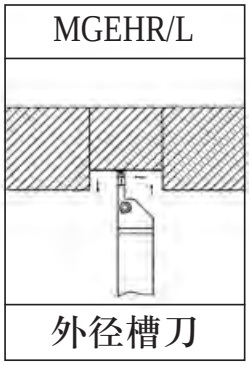

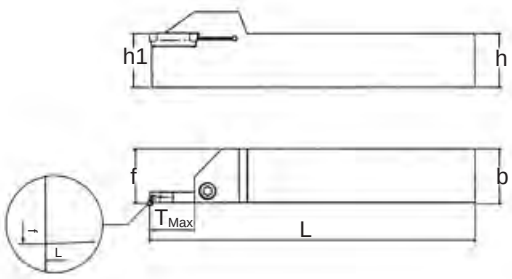

型号 Cat No		适用条件 Application					刀 片 Insert	配 件 Parts	
		h	b	L	f	T最大		螺钉 Screw	扳手 Wrench
MGEHR／L	1616–2	16	16	100	16.25	14	MGMN200	0520	L4.0
	2020–2	20	20	125	20.25				
	2525–2	25	25	150	25.25				
	1616–2.5	16	16	100	16.3	16	MGMN250		
	2020–2.5	20	20	125	20.3				
	2525–2.5	25	25	150	25.3				
	1616–3	16	16	100	16.35	18	MGMN300		
	2020–3	20	20	125	20.4	18			
	2020–3–T10	20	20	125	20.4	10			
	2525–3	25	25	150	25.4	18			
	2525–3–T10	25	25	150	25.4	10			
	3232–3	32	32	170	32.4	18			
	3232–3–T10	32	32	170	32.4	10			
	2020–4	20	20	125	20.4	18	MGMN400		
	2020–4–T10	20	20	125	20.4	10			
	2525–4	25	25	150	25.4	18			
	2525–4–T10	25	25	150	25.4	10			
	3232–4	32	32	170	32.4	18			
	3232–4–T10	32	32	170	32.4	10			
	2020–5	20	20	125	20.5	23	MGMN500		
	2525–5	25	25	150	25.5				
	3232–5	32	32	170	32.5				
	2020–6	20	20	125	20.6	23	MGMN600		
	2525–6	25	25	150	25.6				
	3232–6	32	32	170	32.6				

MGNVR／L



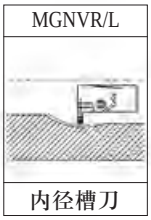

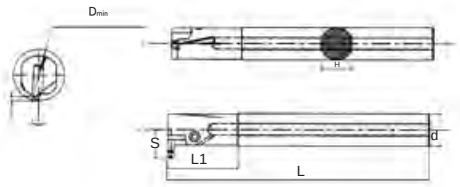

型号 Cat No		适用条件 Application							刀片 Insert	配件 Parts	
		D_{min}	d	L	L1	H	$T_{最大}$	S		螺钉 Screw	扳手 Wrench
MGNVR／L	2016–2	20	16	150	35	15	5	12.4	MGMN200	0310	L2.5
	2520–2	25	20	150	45	18	5	14.0		0512	L4
	2925–2	29	25	200	45	23	5	17.2			
	2520–2.5	25	20	150	45	18	6	15.1	MGMN250		
	2925–2.5	29	25	200	45	23	6	18.2			
	2520–3	25	20	150	45	18	6	15.6	MGMN300		
	3125–3	31	25	200	45	23	6	18.9			
	3732–3	37	32	250	65	30	6	21.5			
	2520–4	25	20	150	45	18	6	15.6	MGMN400		
	3125–4	31	25	200	45	23	6	18.9			
	3732–4	37	32	200	65	30	6	21.5			
	3125–5	31	25	200	45	23	8	19.4	MGMN500		
	3732–5	37	32	250	65	30	8	21.5			

KGMR／L



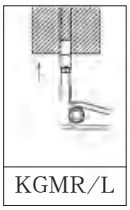

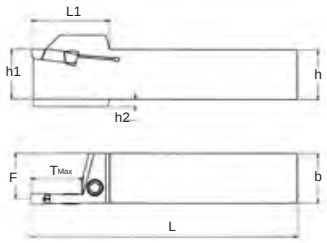

型号 Cat No		适用条件 Application						刀片 Insert	配件 Parts	
		h(h1)	b	L	F	h2	Tmax		螺钉 Screw	扳手 Wrench
KGMR／L								GMM2... GMG2... GMN2...	NLJ0520	L4.0
	2020K–2T17	20	20	125	19.15	–	17			
	2525M–2T17	25	25	150	24.15	–				
	1616H–3T20	16	16	100	14.8	4	20	GMM3.../GMM4... GMG3.../GMG4... GMN3.../GMN4...		
	2020K–3T20	20	20	125	18.8	–				
	2525M–3T17	25	25	150	23.8	–	17			
	2020K–4T20	20	20	125	18.3	–	20	GMM4.../GMM5... GMG4.../GMG5... GMN4.../GMN5...		
	2525M–4T20	25	25	150	23.3	–				
	2525M–4T25	25	25	150	23.3	–	25			
	2525M–5T25	32	25	150	22.8	–		GMM5.../GMN5.../GMN6... GMG5.../GMM6.../GMG6...		
	3232P–5T25	32	32	170	29.8	–				

螺纹刀杆 THREADING HOLDER

SER/L





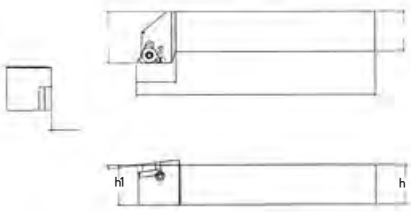

型号 Cat No		适用条件 Application						刀片 Insert	配件 Parts			
		h	b	L	f	h1	L1		螺钉 Screw	扳手 Wrench	垫片 Shim	侧孔螺钉 Side Screw
SER/L	1212H16	12	12	100	16	12	20	16ER/L	M3.5*12	T15	016	0308
	1616H16	16	16	100	20	16	22					
	2020K16	20	20	125	25	20	25					
	2525M16	25	25	150	32	25	30					
	3232P16	32	32	170	40	32	35					

SNR/L



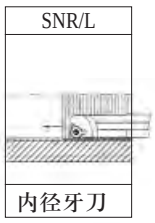

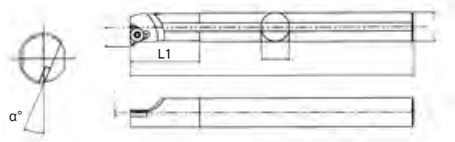

型号 Cat No		刀片 Insert	适用条件 Application							配件 Parts	
			D_{min}	d	H	L	L1	f	α°	螺钉 Screw	扳手 Wrench
SNR/L	0010K11	11NP/L	13	10	9	125	22	7.2	15	M2.5*6	T8
	0012M11		15	12	11	150	22	8.5	15		
	0013M16	16NP/L	16	13	15	150	32	10.2	17	M3.5*8	T15
	0016M16		19	16	15	150	40	11.7	15		
	0020Q16		24	20	19	180	40	13.7	21		
	0025R16		29	25	24	200	45	16.2	21		
	0032S16		36	32	30	250	50	19.7	15		
	0040T16		44	40	38	300	55	23.7	15		
	0050U16		54	50	48	350	60	28.7	15		
	1016M11	11NP/L	13	16	15	150	22	7.7	15	M2.5*6	T8
	1316M11		16	16	15	150	32	8.7	17		
	1516M11		19	16	15	150	40	9.7	17		
	1516M16	16NP/L	19	16	15	150	40	97	17	M3.5*8	T15
	1020M11	11NP/L	13	20	19	150	32	7.7	17	M2.5*6	T8
	1320M11		16	20	19	150	32	8.7	17		
	1620M16	16NP/L	19	20	19	150	40	9.7	15	M3.5*8	T15

镗孔刀杆 BORING BAR

TZC 镗头



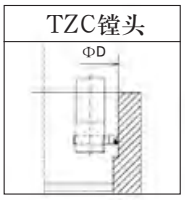

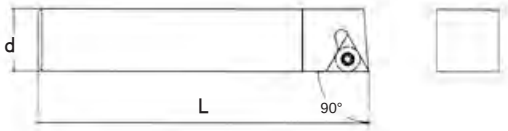

型号 Cat No	刀 片 Insert	适用条件 Application			配 件 Parts	
		ΦD	L	d	螺钉 Screw	扳手 Wrench
TZC08–23–90–L	TC◇◇090204	25–38	23	8	M2.2*5	T–6
TZC08–36–90–L		38–50	36			
TZC10–36–90–L	TC◇◇090204			10	M2.5*6	T–8
TZC10–48–90–L		50–70	48			
TZC13–48–90–L	TC◇◇110204			13		
TZC13–65–90–L		70–90	65			
TZC16–60–90–L	TC◇◇110204	62–90	60	16		
TZC16–85–90–L		90–115	85			
TZC19–70–90–L	TC◇◇16T308	72–105	70	19	M3.5*8	T–15
TZC19–95–90–L		105–135	95			
TZC19–120–90–L		135–150	120			
TZC25–100–90–L	TC◇◇16T308	105–140	100	25		
TZC25–135–90–L		140–190	135			

TQC 镗头

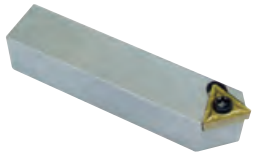

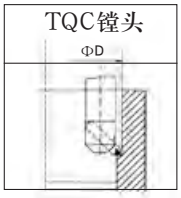

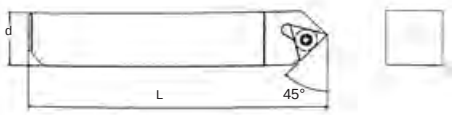

型号 Cat No	刀 片 Insert	适用条件 Application			配 件 Parts	
		ΦD	L	d	螺钉 Screw	扳手 Wrench
TQC08–29–45–L	TC◇◇090204	25–38	29	8	M2.2*5	T–6
TQC08–45–45–L		38–50	45			
TQC10–45–45–L	TC◇◇090204			10	M2.5*6	T–8
TQC10–60–45–L		50–70	60			
TQC13–60–45–L	TC◇◇110204			13		
TQC13–81–45–L		70–90	81			
TQC16–75–45–L	TC◇◇110204	62–90	75	16		
TQC16–106–45–L		90–115	106			
TQC19–88–45–L	TC◇◇16T308	72–105	88	19	M3.5*8	T–15
TQC19–119–45–L		105–135	119			
TQC19–150–45–L		135–150	150			
TQC25–125–45–L	TC◇◇16T308	105–140	125	25		
TQC25–169–45–L		140–190	169			

PRECISION TOOL

車床附件

Lathe accessories

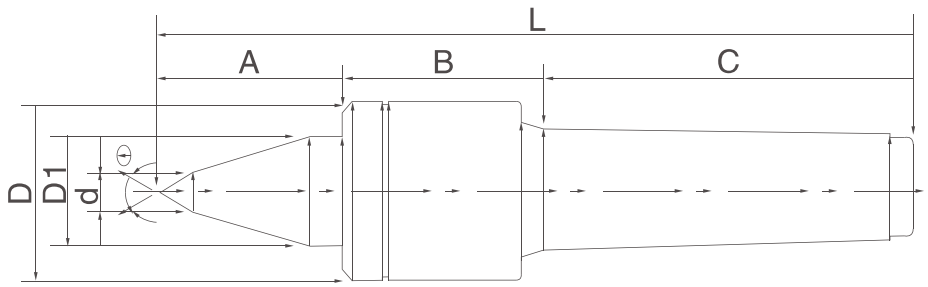

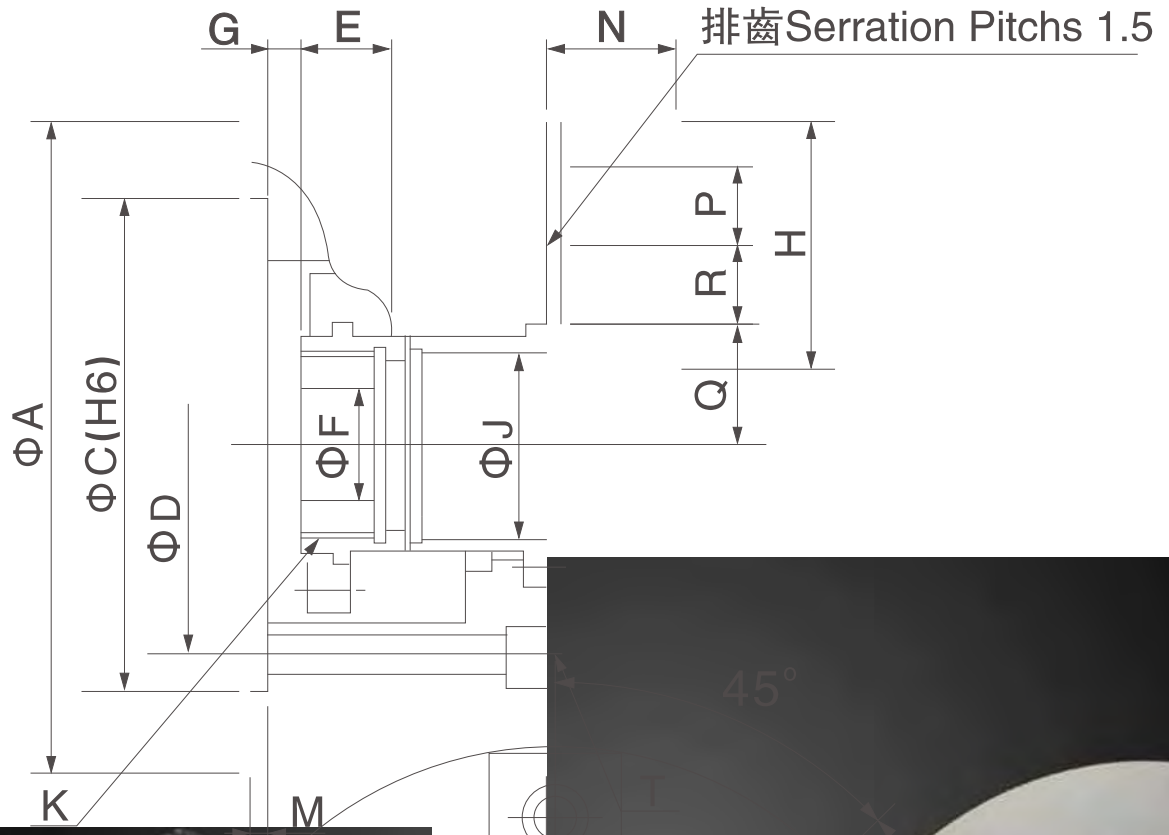





Beijing Shuangfengli Technology Co., Ltd.
www.bjslfkj.cn
199

NBD
PRECISION TOOL

SELF-CENTRING CHUCK STRUVTURE 自定心卡盘结构



爪的种类 DIFFERENT TYPES OF JAWS

整体爪 ONE-PIECE JAWS

分离爪 TWO-PIECE JAWS



软爪 SOFT JAW
正爪 INTERNAL JAW
反爪 EXTERNAL JAW
软顶爪(平) SOFT TOP JAW
硬顶爪 TOP JAW
基爪 MASTER JAW

与主轴连接形式 MOUNTING TYPES TO THE SPINDLE NOSES OF THE MACHINE TOOLS.

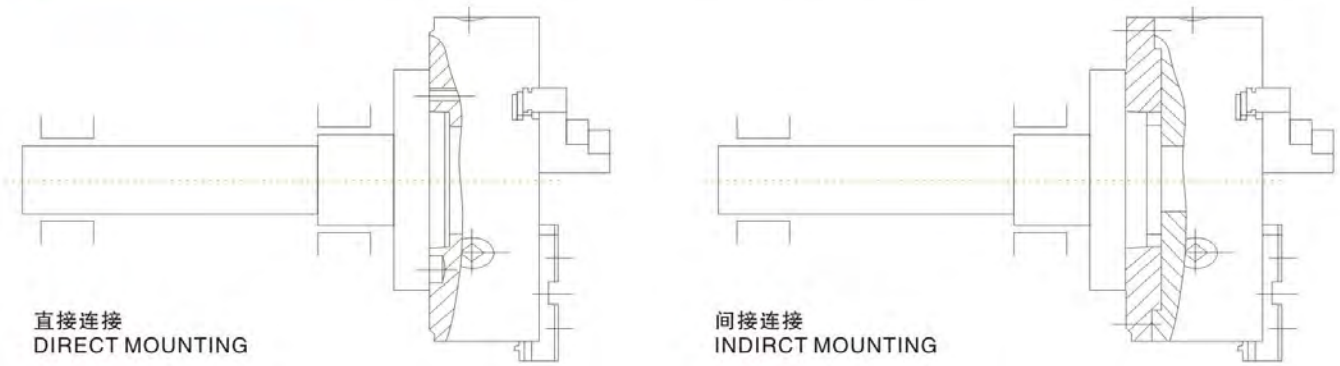

直接连接
DIRECT MOUNTING

间接连接
INDIRCT MOUNTING

NBD®
PRECISION TOOL

TYPE GUIDE

选型指南

我公司主要生产全系列机床用手动自定心卡盘和全系列四爪单动卡盘。
为方便你对我公司产品的使用，现将我公司主要产品夹持参数介绍如下：

We mainly produce full range of manual operating self-centring chucks and 4 jaw independent chucks for lathe machine use for the convenience of users.The main products and their general technical fectures are shown below.

三爪自定心卡盘夹持范围
Three-jaw Self-cenring Chucks Clamping Range.

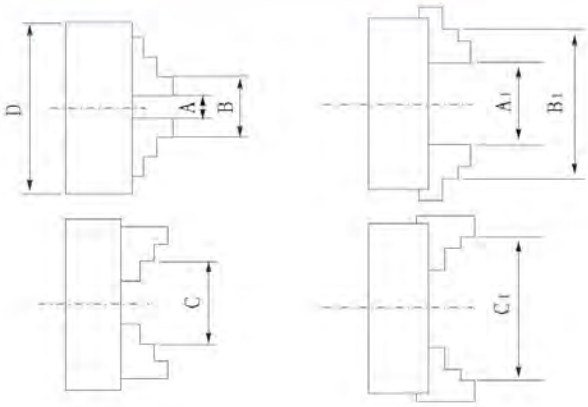

四爪单动卡盘夹持范围
Four-jaw independent Chucks Clamping Range.

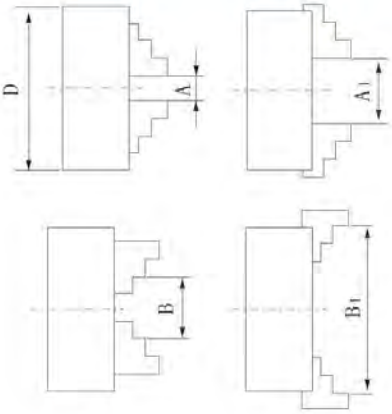

夹持范围 Clamping Range

规格D MODELD Size	正爪 Internal Jaws		反爪 External Jaws
	夹紧范围 Clamping range	撑紧范围 Clamping range	夹紧范围 Clamping range
	A-A1	B-B1	C-C1
80	2~22	25~70	22~63
100	2~30	30~90	30~80
125	2.5~40	38~125	38~110
130	3~40	40~130	40~120
160	3~55	50~160	55~145
165	4~60	52~165	55~150
190	4~70	65~190	65~190
200	4~85	65~200	65~200
240	6~100	80~250	90~250
250	6~110	80~250	90~250
315	10~140	95~315	100~315
320	10~140	95~320	100~320
325	10~140	95~325	100~325
380	15~210	120~380	120~380
400	15~210	120~400	120~400
500	25~280	150~500	150~500
630	50~350	170~630	170~630
800	150~450	300~800	300~800
1000	290~600	430~1000	430~1000

夹持范围 Clamping Range

规格D MODELD Size	正卡爪夹紧范围 Internal Jaws clamping range	反卡爪夹紧范围 External Jaws clamping range
	A-A1	B-B1
80	5~35	35~80
100	6~45	40~100
125	7~57	48~125
160	8~80	50~160
200	10~100	63~200
250	15~130	80~250
300	20~156	100~300
315	20~170	100~315
320	20~176	100~320
350	20~206	100~350
400	25~250	118~400
500	35~300	125~500
630	50~400	160~630
800	70~540	200~800
1000	100~680	250~1000

NBD
PRECISION TOOL

K10 SERIES TWO-JAW

SELF-CENTRING CHUCK
K10系列二爪自定心卡盘

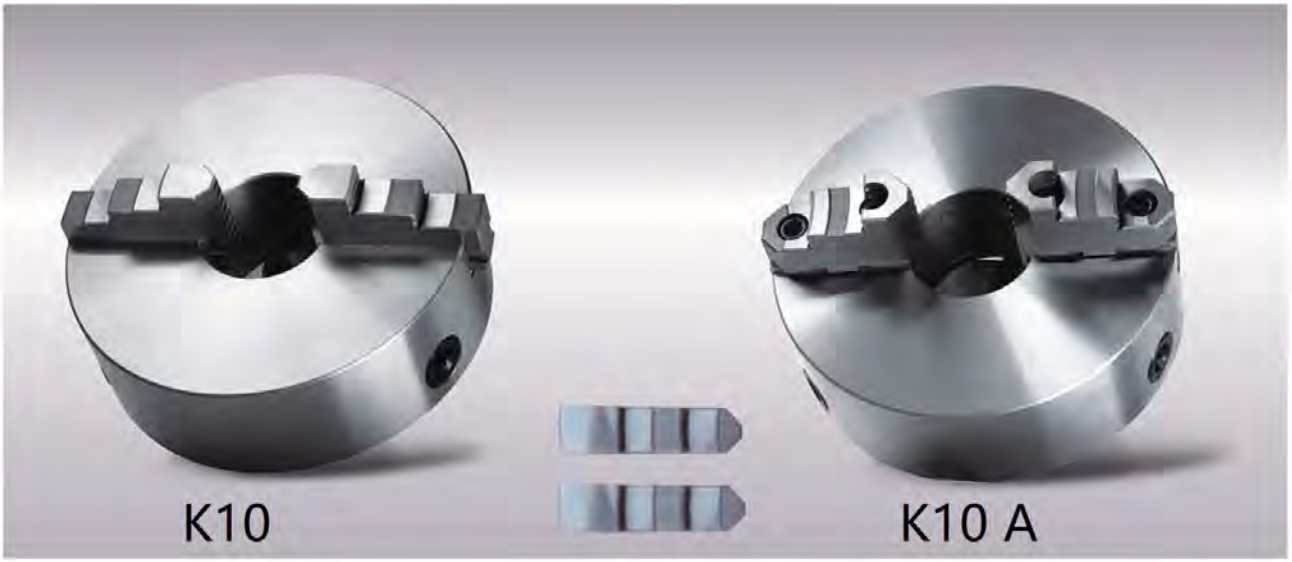

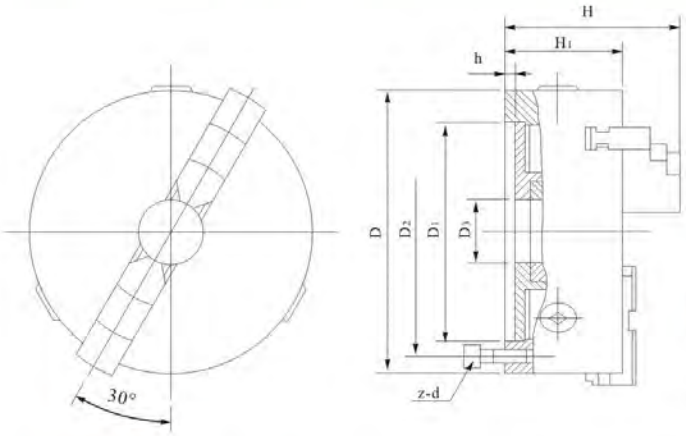



说明 Explain

K10型二爪自定心卡盘为分离爪结构配带软卡爪，适用于加工各种异形工件，如管件、矩形截面零件等不规则形体零件。用户可根据零件形状改制成适宜的夹持方式，经随机配车(磨)后获得较高定心精度，满足夹持要求。

K10 series Two-jaw Self-centring chuck is of separate jaws and comes with soft jaws It is suitable for processing various special shaped workpieces, suchastube, rectangular section accessories and so on. Users may change the plate to a certain holding style acco rding to needs Higher centring accuracy can be achieved after being rubbed on the machine, so as to satisfy the need for holding.

规格表 Specifications

规格/型式 SEPC. /MODEL	D1	D2	D3	H	H1	h	z-d
K10 80	55	66	16	66	50	3.5	3-M6
K10 100	72	84	22	74.5	55	3.5	3-M8
K10 125	95	108	30	85	58	4	3-M8
K10 130	100	115	30	85	58	4	3-M8
K10160	130	142	40	95	65	5	3-M8
K10160A	130	142	40	109	65	5	3-M8
K10165	130	145	40	95	65	5	3-M8
K10165A	130	145	40	109	65	5	3-M8
K10200	165	180	65	109	75	5	3-M10
K10200A	165	180	65	122	75	5	3-M10
K10250	206	226	80	120	80	5	3-M12
K10250A	206	226	80	133	80	5	3-M12
K10315	260	285	100	142.5	90	6	3-M16
K10315A	260	285	100	155.5	90	6	3-M16
K10320	270	290	100	142.5	90	6	3-M16
K10320A	270	290	100	155.5	90	6	3-M16
K10325	272	290	100	142.5	90	6	3-M16
K10325A	272	290	100	155.5	90	6	3-M16
K10380	325	350	130	155.5	100	6	3-M16
K10380A	325	350	130	170.5	100	6	3-M16
K10400	340	368	130	155.5	100	6	3-M16
K10400A	340	368	130	170.5	100	6	3-M16

NBD
PRECISION TOOL

K11 SERIES····· THREE-JAW

SELF-CENTRING CHUCK
K11系列三爪自定心卡盘

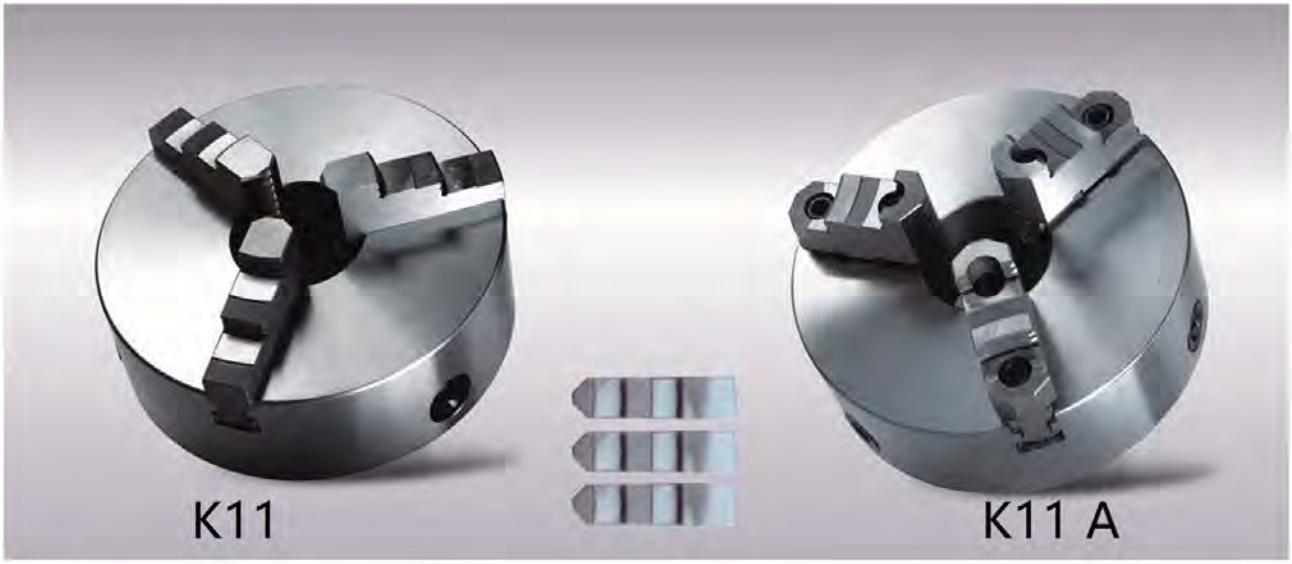



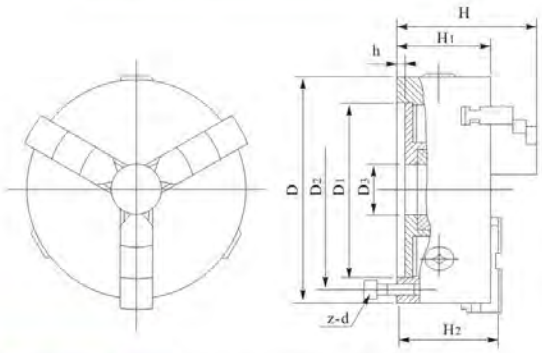

规格表 Specifications

规格/型式 SEPC. /MODEL	D1	D2	D3	H	H1	H2	h	z-d
K11 80	55	66	16	66	50	–	3.5	3-M6
K11 100	72	84	22	74.5	55	–	3.5	3-M8
K11 125	95	108	30	85	58	–	4	3-M8
K11 130	100	115	30	85	58	–	4	3-M8
K11 160	130	142	40	95	65	–	5	3-M8
K11 160A	130	142	40	109	65	71	5	3-M8
K11 165	130	145	40	95	65	–	5	3-M8
K11 165A	130	145	40	109	65	71	5	3-M8
K11 190	155	172	55	109	75	–	5	3-M10
K11 190A	155	172	55	122	75	80	5	3-M10
K11 200	165	180	65	109	75	–	5	3-M10
K11 200A	165	180	65	122	75	80	5	3-M10
K11 240	195	215	70	120	80	–	8	3-M12
K11 240A	195	215	70	133	80	85	8	3-M12
K11 250	206	226	80	120	80	–	5	3-M12
K11 250A	206	226	80	133	80	85	5	3-M12
K11 315	260	285	100	142.5	90	–	6	3-M16
K11 315A	260	285	100	155.5	90	96.5	6	3-M16
K11 320	270	290	100	142.5	90	–	6	3-M16
K11 320A	270	290	100	155.5	90	96.5	6	3-M16
K11 325	272	296	100	142.5	90	–	6	3-M16
K11 325A	272	296	100	155.5	90	96.5	6	3-M16
K11 380	325	350	130	155.5	100	–	6	3-M16
K11 380A	325	350	130	170.5	100	96.5	6	3-M16
K11 400	340	368	130	155.5	100	–	6	3-M16
K11 400A	340	368	130	170.5	100	108.5	6	3-M16
K11 500	440	465	200	176	115	–	6	6-M16
K11 500A	440	465	200	203	115	123	6	6-M16
K11 630	560	595	260	192	130	–	7	6-M16
K11 630A	560	595	260	218	130	138	7	6-M16
K11 800A	710	760	385	249	148	158	8	6-M20
K11 1000A	910	950	460	266	165	–	8	6-M24
K11 1250A	910	950	500	281	180	–	10	6-M24

说明 Explain

K11型三爪自定心卡盘为K11、K11A二种型号。K11型配带正爪和反爪各一副，可分别使用，K11A型配带符合ISO3442标准的分离爪。并可根据用户提供软卡爪，经随机配车(磨)后可获得较高定心精度，满足夹持要求。

K11 series Three-jaw Self-centring chuck is subdivided into two types, K11,K11A.Type K11 provides two sets of jaws in different directions which can be used respectively.Type K11A provides ISO3442 standard jaws.Soft jaws are to be provided on request Higher centring accuracy can be achieved after being rubbed on the machine,so as to satisfy the need for holding.

NBD
PRECISION TOOL

DK11 SERIES · · · · · ·
THREE-JAW

SELF-CENTRING CHUCK
德标 DK11系列三爪自定心卡盘



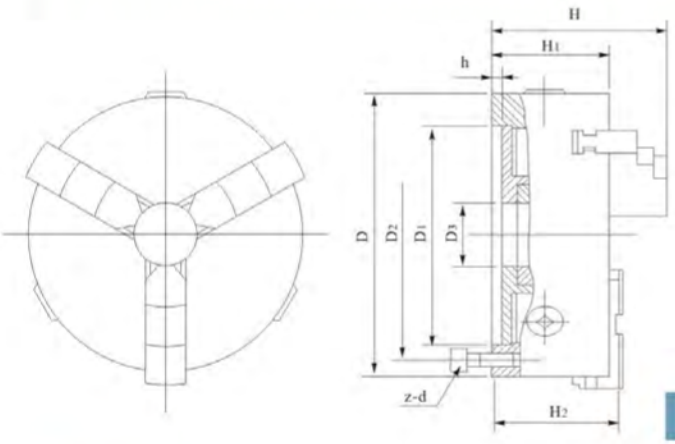



说明 Explain

德标K11系列三爪自定心卡盘，符合DIN6350标准，采用短圆柱连接形式，卡爪型式有整体爪和A型分离爪，A型分离爪符合ISO3442标准，也可根据用户提供软爪，经随机配车(磨)后，可获得较高定心精度。

German standardized 3-jaw Self-centering Chucks are according to DIN 6350. The chucks of this type are mounted to spindle nose through an adapting flange. A set of internal jaws and a set of external jaws are provided with as weel as 2-piece jaws. Two-piece jaws are accouding to ISO3442 Standard. Soft jaws are offered upon users'requests to increase the clamping accuracy by remachining.

规格表 Specifications

规格/型式 SEPC./MODEL	D1	D2	D3	H	H1	H2	h	z-d
Dk11180	56	67	16	66	50	–	3	3-M6
Dk11100	70	83	22	74.5	55	–	3	3-M8
Dk11125	95	108	30	84	58	–	4	3-M8
Dk11160	125	140	45	95	65	–	4	6-M10
DK11160A	125	140	45	109	65	71	4	6-M10
Dk11200	160	176	65	109	75	–	4	6-M10
DK11200A	160	176	65	122	75	80	4	6-M10
Dk11250	200	224	80	120	80	–	5	6-M12
DK11250A	200	224	80	134.5	80	86	5	6-M12
Dk11315	260	286	104	131.5	90	–	5	6-M16
DK11315A	260	286	104	148.5	90	96.5	5	6-M16
Dk11400	330	362	136	157.5	100	–	5	6-M16
DK11400A	330	362	136	167	100	108.5	5	6-M16
DK11500A	420	458	200	203	115	123	6	6-M16
DK11630A	545	586	260	218	130	138	7	6-M16
DK11800A	710	760	385	249	148	158	8	6-M20
DK111000A	910	950	460	266	165	175	8	6-M24

NBD
PRECISION TOOL

K11 SERIES THREE-JAW

SELF-CENTRING CHUCK
俄标K11系列三爪自定心卡盘

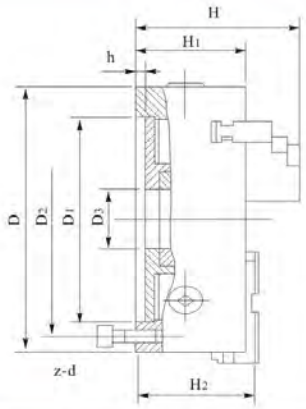



说明 Explain

俄标K11系列三爪自定心卡盘，符合ГОСТ2675标准，采用短圆柱连接形式，卡爪型式有整体爪和A型分离爪，A型分离爪符合ISO3442标准，也可根据用户提供软爪，经随机配车(磨)后，可获得较高定心精度。

Russian Standardized 3-jaw Self-centering Chucks adopt short conical connection according to Standard ГОСТ 2675. The jaws have one-piece and two-piece called A type. A type two-piece jaws are accouding to ISO 3442 Standard. Soft jaws can be provided according to the clients' requests. Higher centering accuracy can be achieved after machining.

规格表 Specifications

规格/型式 SEPC./MODEL	D1	D2	D3	H	H1	H2	h	z-d
7100-0001П	55	66	16	66	50	–	3.5	3-M6
7100-0002П	72	86	22	74.5	55	–	3.5	3-M8
7100-0003П	95	108	30	85	58	–	4	3-M8
7100-0005П	130	142	40	95	65	–	5	3-M8
7100-0007П	165	180	65	109	75	–	5	3-M10
7100-0009П	210	226	80	120	80	–	5	3-M12
7100-0011П	270	290	100	142.5	90	–	6	3-M12
7100-0015П	340	368	130	155.5	100	–	6	3-M16
7100-0017П	440	465	200	176	115	–	6	6-M16
7100-0019П	560	595	260	192	130	–	7	6-M16





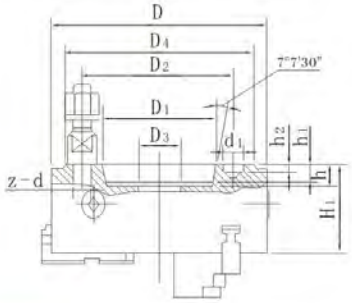

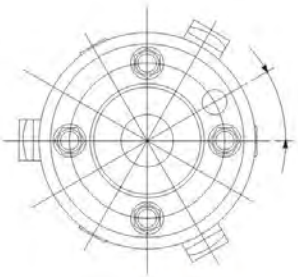

规格表 Specifications

二：C型：拔盘/螺栓锁紧连接
Two:Type C:bolt locking joint

规格/型式 SEPC./MODEL	D	D1	D2	D3	D4	H1	h	h1	h2	d1	z-d
7100-0033П	200	106.375	133.4	60	170	88	16	13	6.5	19.5	4-M12
7100-0035П	250	106.375	133.4	70	170	95	16	13	6.5	19.5	4-M12
7100-0037П	250	139.719	171.4	80	220	95	18	14	8	24.2	4-M16
7100-0039П	315	106.375	133.4	100	170	112	16	13	6.5	19.5	4-M12
7100-0041П	315	139.719	171.4	100	220	112	18	14	8	24.2	4-M16
7100-0043П	400	139.719	171.4	130	220	122	18	14	8	24.2	4-M16
7100-0045П	400	196.869	235	130	290	122	20	16	10	29.4	6-M20
7100-0047П	500	139.719	171.4	190	220	135	–	–	–	24.2	4-M16
7100-0049П	500	196.869	235	190	290	135	–	16	10	29.4	6-M20
7100-0051П	630	196.869	235	190	290	150	–	16	10	29.4	6-M20
7100-0053П	630	285.775	330.2	260	400	150	21	17	10	35.7	6-M24

NBD®
PRECISION TOOL

K11 SERIES DIRECT MOUNTING THREE-JAW

SELF-CENTRING CHUCK
K11系列短锥三爪自定心卡盘

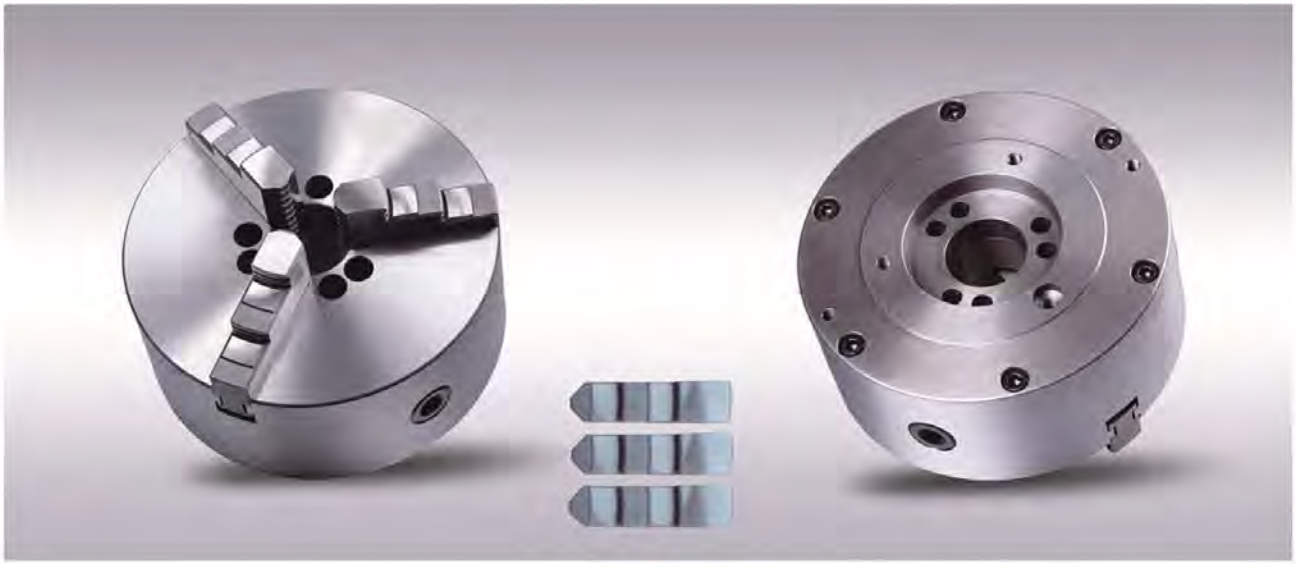

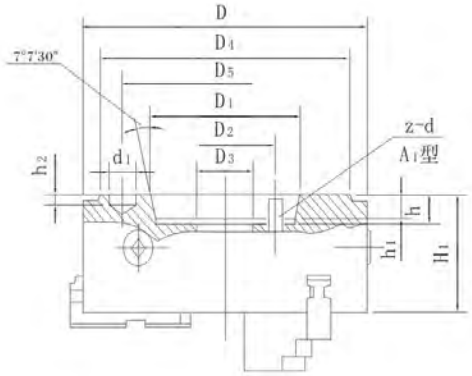

说明 Explain

K11系列短锥三爪自定心卡盘适用短圆锥孔定位，定位精度高，拆装快捷、方便、可靠。按其与机床主轴端部连接型式分为A型(穿通螺钉连接)、C型(拔盘、螺栓锁紧连接)、D型(拉杆、凸轮锁紧连接)三种型式。

K11series direct Mounting Three-jaw Self-centring chucks adopt short-conical hole centring, which are accurate in centring, easy to remove, convenient and reliable. Three types are divided according to the way of joining with the spindle nose of machines: Type A(joined with screw), Type C(bolt locking joint), Type D(pull rod, cam locking joint).

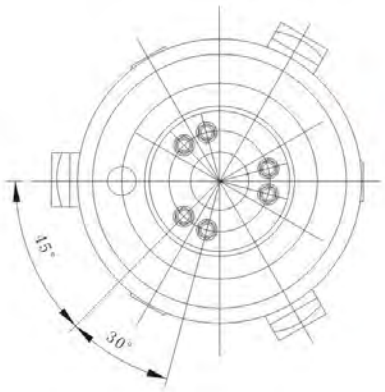

规格表 Specifications

一：A型：穿通螺钉连接 One: Type A:Joined with screw
1：A1型<内圈螺钉连接> 1: Type A1<Inner screw joint>

规格/型式 SEPC./MODEL	D	D1	D2	D3	D4	D5	H1	h	h1	h2	d1	z-d
K11200/A15、K11200A/A15	200	82.563	61.9	40	133	104.8	93	14.288	12	6.5	16.3	3-M10
K11250/A15、K11250A/A15	250	82.563	61.9	40	133	104.8	104	14.288	12	6.5	16.3	3-M10
K11250/A16、K11250A/A16	250	106.375	82.6	55	165	133.4	104	15.875	13	6.5	19.5	6-M12
K11315/A16、K11315A/A16	315	106.375	82.6	55	165	133.4	114	15.875	13	6.5	19.5	6-M12
K11315/A18、K11315A/A18	315	139.719	111.1	78	210	171.4	116	17.462	14	8	24.2	6-M16
K11320/A16、K11320A/A16	320	106.375	82.6	55	165	133.4	114	15.875	13	6.5	19.5	6-M12
K11320/A18、K11320A/A18	320	139.719	111.1	78	210	171.4	116	17.462	14	8	24.2	6-M16
K11325/A16、K11325A/A16	325	106.375	82.6	55	165	133.4	114	15.875	13	6.5	19.5	6-M12
K11325/A18、K11325A/A18	325	139.719	111.1	78	210	171.4	116	17.462	14	8	24.2	6-M16
K11380/A18、K11380A/A18	380	139.719	111.1	78	210	171.4	128	17.462	14	8	24.2	6-M16
K11400/A18、K11400A/A18	400	139.719	111.1	78	210	171.4	128	17.462	14	8	24.2	6-M16

NBD
PRECISION TOOL

K11 SERIES DIRECT MOUNTING THREE-JAW SELF-CENTRING CHUCK

K11系列短锥三爪自定心卡盘



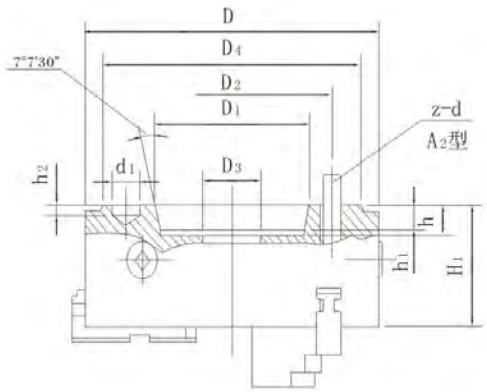

说明 Explain

K11系列短锥三爪自定心卡盘采用短圆锥孔定位，定位精度高，拆装快捷、方便、可靠。按其与机床主轴端部连接型式分为A型(穿通螺钉连接)、C型(拔盘、螺栓锁紧连接)、D型(拉杆、凸轮锁紧连接)三种型式。

K11series direct Mounting Three-jaw Self-centring chucks adopt short-conical hole centring, which are accurate in centring, easy to remove, convenient and reliable. Three types are divided according to the way of joining with the spindle nose of machines: Type A(joined with screw), Type C(bolt locking joint), Type D(pull rod, cam locking joint).

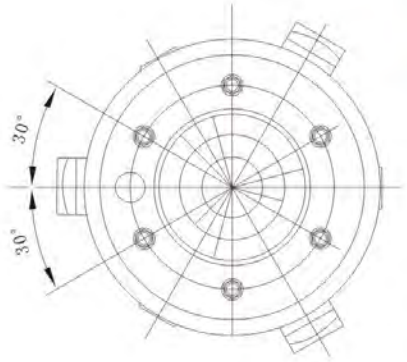

规格表 Specifications

2: A2型<外圈螺钉连接>
2: Type A2<Outer screw joint>

规格/型式 SEPC./MODEL	D	D1	D2	D3	D4	H1	h	d1	z-d
K11 160/A2-5 /K11 160A/A2-5	160	82.563	61.9	40	133	93	14.288	16.3	3-M10
K11 200/A2-4 /K11 200A/A2-4	200	63.513	82.6	60	108	88	–	14.7	3-M10
K11 200/A2-6 /K11 200A/A2-6	200	106.375	133.4	65	165	85	16	19.5	6-M12
K11 250/A2-6 /K11 250A/A2-6	250	106.375	133.4	80	165	112	16	19.5	6-M12
K11 250/A2-8 /K11 250A/A2-8	250	139.719	171.4	80	210	112	18	24.2	6-M16
K11 320/A2-6 /K11 320A/A2-6	320	106.375	133.4	100	165	135	16	19.5	6-M12
K11 320/A2-8 /K11 320A/A2-8	320	139.719	171.4	100	210	135	18	24.2	6-M16
K11 320A/A2-11	320	196.869	235	100	280	135	20	29.4	6-M20
K11 400/A2-8 /K11 400A/A2-8	400	139.719	171.4	130	210	122	18	24.2	6-M16
K11 400A/A2-11	400	196.869	235	130	280	145	20	29.4	6-M20
K11 500A/A2-11	500	196.869	235	190	280	135	20	29.4	6-M20
K11 630A/A2-11	630	196.869	235	190	280	160	20	29.4	6-M20
K11 630A/A2-15	630	285.775	330.2	200	380	160	21	35.7	6-M24
K11 800A/A2-15	800	285.775	330.2	280	380	186	21	35.7	6-M24
K11 800A/A2-20	800	412.775	463.6	385	520	186	23	42.1	6-M24
K11 1000A/A2-15	1000	285.775	330.2	280	380	208	21	35.7	6-M24
K11 1000A/A2-20	1000	412.755	463.6	400	520	208	23	42.1	6-M24

NBD
PRECISION TOOL

K11 SERIES DIRECT MOUNTING THREE-JAW

SELF-CENTRING CHUCK

K11系列短锥三爪自定心卡盘



说明 Explain

K11系列短锥三爪自定心卡盘采用短圆锥孔定位，定位精度高，拆装快捷、方便、可靠。按其与机床主轴端部连接型式分为A型(穿通螺钉连接)、C型(拔盘、螺栓锁紧连接)、D型(拉杆、凸轮锁紧连接)三种型式。

K11series direct Mounting Three-jaw Self-centring chucks adopt short-conical hole centring, which are accurate in centring, easy to remove, convenient and reliable. Three types are divided according to the way of joining with the spindle nose of machines: Type A(joined with screw), Type C(bolt locking joint), Type D(pull rod, cam locking joint).

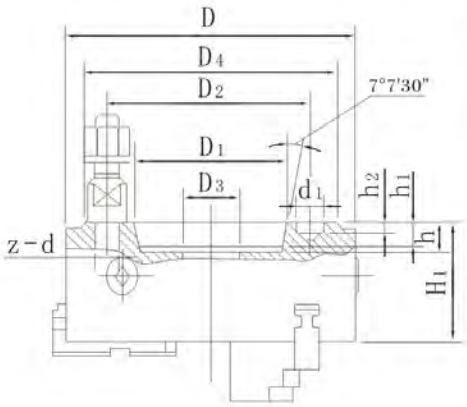

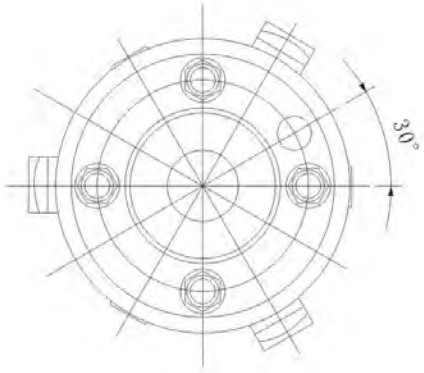

规格表 Specifications

二：C型：拨盘/螺栓锁紧连接
Two:Type C:bolt locking joint

规格/型式 SEPC./MODEL	D	D1	D2	D3	D4	H1	h	h1	h2	d1	z-d
K11125/C3	125	53.975	75	25	102	63	13	10	–	–	3-M10
K11125/C4	125	63.513	82.6	25	112	63	13	10	6.5	14.7	3-M10
K11160/C3、K11160A/C3	160	53.975	75	40	102	78	13	10	–	–	3-M10
K11160/C4、K11160A/C4	160	63.513	82.6	40	112	78	13	10	6.5	14.7	3-M10
K11160/C5、K11160A/C5	160	82.563	104.8	40	135	78	15	12	6.5	16.3	4-M10
K11200/C4、K11200A/C4	200	63.513	82.6	60	112	88	–	10	6.5	14.7	3-M10
K11200/C5、K11200A/C5	200	82.563	104.8	50	135	88	15	12	6.5	16.3	4-M10
K11200/C6、K11200A/C6	200	106.375	133.4	60	170	88	16	13	6.5	19.5	4-M12
K11250/C5、K11250A/C5	250	82.563	104.8	79	135	95	–	12	6.5	16.3	4-M10
K11250/C6、K11250A/C6	250	106.375	133.4	70	170	95	16	13	6.5	19.5	4-M12
K11250/C8、K11250A/C8	250	139.719	171.4	80	220	95	18	14	8	24.2	4-M16
K11315/C6、K11315A/C6	315	106.375	133.4	100	170	112	16	13	6.5	19.5	4-M12
K11315/C8、K11315A/C8	315	139.719	171.4	100	220	112	18	14	8	24.2	4-M16
K11315/C11、K11315A/C11	315	196.869	235	100	290	112	20	16	10	29.4	6-M20
K11320/C6、K11320A/C6	320	106.375	133.4	100	170	112	16	13	6.5	19.5	4-M12
K11320/C8、K11320A/C8	320	139.719	171.4	100	220	112	18	14	8	24.2	4-M16
K11320/C11、K11320A/C11	320	196.869	235	100	290	112	20	16	10	29.4	6-M20
K11325/C6、K11325A/C6	325	106.375	133.4	100	170	112	16	13	6.5	19.5	4-M12
K11325/C8、K11325A/C8	325	139.719	171.4	100	220	112	18	14	8	24.2	4-M16
K11325/C11、K11325A/C11	325	196.869	235	100	290	112	20	16	10	29.4	6-M20
K11380/C8、K11380A/C8	380	139.719	171.4	130	220	122	18	14	8	24.2	4-M16
K11380/C11、K11380A/C11	380	196.869	235	130	290	122	20	16	10	29.4	6-M20
K11400/C8、K11400A/C8	400	139.719	171.4	130	220	122	18	14	8	24.2	4-M16
K11400/C11、K11400A/C11	400	196.869	235	130	290	122	20	16	10	29.4	6-M20
K11500/C11、K11500A/C11	500	196.869	235	190	290	135	–	16	10	29.4	6-M20
K11500/C15、K11500A/C15	500	258.755	330.2	200	400	135	21	17	10	35.7	6-M24
K11630/C11、K11630A/C11	630	196.869	235	190	290	150	–	16	10	29.4	6-M20
K11630/C15、K11630A/C15	630	285.775	330.2	260	400	150	21	17	10	35.7	6-M24

NBD
PRECISION TOOL

K11 SERIES DIRECT MOUNTING THREE-JAW

SELF-CENTRING CHUCK

K11系列短锥三爪自定心卡盘



说明 Explain

K11系列短锥三爪自定心卡盘采用短圆锥孔定位，定位精度高，拆装快捷、方便、可靠。按其与机床主轴端部连接型式分为A型(穿通螺钉连接)、C型(拔盘、螺栓锁紧连接)、D型(拉杆、凸轮锁紧连接)三种型式。

K11series direct Mounting Three-jaw Self-centring chucks adopt short-conical hole centring, which are accurate in centring, easy to remove, convenient and reliable. Three types are divided according to the way of joining with the spindle nose of machines: Type A(joined with screw), Type C(bolt locking joint), Type D(pull rod, cam locking joint).

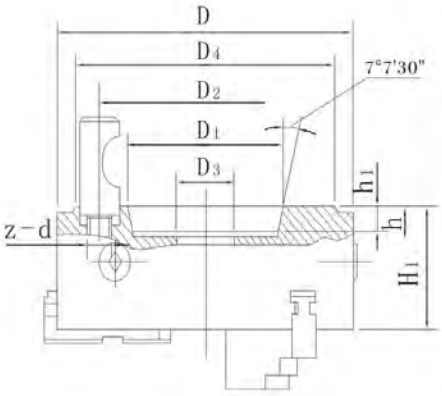

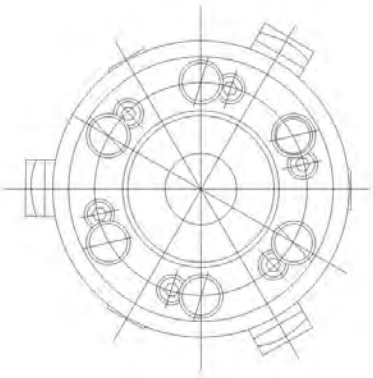

规格表 Specifications

三：D型：拉杆/凸轮锁紧连接
Three:Type D:pull rod, can locking joint

规格/型式 SEPC./MODEL	D	D1	D2	D3	D4	H1	h	h1	z-d
K11125/D3	125	53.975	70.6	25	92	63	13	10	3-M10X1
K11125/D4	125	63.513	82.6	25	117	63	13	10	3-M10X1
K11160/D3、K11160A/D3	160	53.975	70.6	40	92	80	13	10	3-M10X1
K11160/D4、K11160A/D4	160	63.513	82.6	40	117	73	13	10	3-M10X1
K11160/D5、K11160A/D5	160	82.563	104.8	40	146	78	15	12	6-M12X1
K11200/D4、K11200A/D4	200	63.513	82.6	60	117	88	–	10	3-M10X1
K11200/D5、K11200A/D5	200	82.563	104.8	50	146	88	15	12	6-M12X1
K11200/D6、K11200A/D6	200	106.375	133.4	60	181	88	16	13	6-M16X1.5
K11250/D5、K11250A/D5	250	82.563	104.8	79	146	95	–	12	6-M12X1
K11250/D6、K11250A/D6	250	106.375	133.4	70	181	95	16	13	6-M16X1.5
K11250/D8、K11250A/D8	250	139.719	171.4	80	225	98	18	14	6-M20X1.5
K11315/D6、K11315A/D6	315	106.375	133.4	100	181	112	16	13	6-M16X1.5
K11315/D8、K11315A/D8	315	139.719	171.4	105	225	112	18	14	6-M20X1.5
K11315/D11、K11315A/D11	315	196.869	235	100	298	112	20	16	6-M22X1.5
K11320/D6、K11320A/D6	320	106.375	133.4	100	181	112	16	13	6-M16X1.5
K11320/D8、K11320A/D8	320	139.719	171.4	105	225	112	18	14	6-M20X1.5
K11320/D11、K11320A/D11	320	196.869	235	100	298	112	20	16	6-M22X1.5
K11325/D6、K11325A/D6	325	106.375	133.4	100	181	112	16	13	6-M16X1.5
K11325/D8、K11325A/D8	325	139.719	171.4	105	225	112	18	14	6-M20X1.5
K11325/D11、K11325A/D11	325	196.869	235	100	298	112	20	16	6-M22X1.5
K11380/D8、K11380A/D8	380	139.719	171.4	130	225	122	18	14	6-M20X1.5
K11380/D11、K11380A/D11	380	196.869	235	130	298	122	20	16	6-M22X1.5
K11400/D8、K11400A/D8	400	139.719	171.4	130	225	122	18	14	6-M20X1.5
K11400/D11、K11400A/D11	400	196.869	235	130	298	122	20	16	6-M22X1.5
K11500/D11、K11500A/D11	500	196.869	235	190	298	135	–	16	6-M22X1.5
K11500/D15、K11500A/D15	500	285.775	330.2	200	403	135	21	17	6-M24X1.5
K11630/D11、K11630A/D11	630	196.869	235	190	298	160	–	16	6-M22X1.5
K11630/D15、K11630A/D15	630	285.775	330.2	260	403	160	21	17	6-M24X1.5
K11800A/D15	800	285.775	330.2	260	403	186	21	17	6-M24X1.5
K11800A/D20	800	412.775	463.6	385	546	186	23	19	6-M27X2

NBD
PRECISION TOOL

KM31 SERIES
THREE-JAW

PRECISON ADJUSTABLE SELF-CENTERING CHUCKS

精密可调三爪自定心卡盘



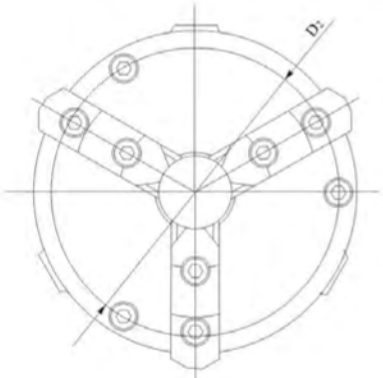

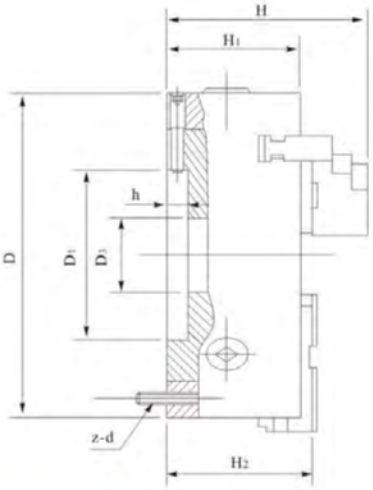

说明 Explain

KM31系列精密可调三爪自定心卡盘，采用A型分离爪，具有可调结构，调整后的卡盘精密度可达到0.01mm, ϕ400mm的卡盘可达到0.02mm。

Adjustable precision 3-jaw self-centering chuck Km31 series are with 2-piece jaws and adjustable precision. After adjusting, the accuracy can be 0.01mm. And Km31400 can be 0.02mm.

规格表 Specifications

规格/型式 SEPC./MODEL	D	D1	D2	D3	H	H1	h	z-d
KM31160A	160	86	140	45	119	75	18.5	3-M10
KM31200A	200	110	160	55	132	85	19	3-M10
KM31250A	250	145	224	80	144.5	90	20	3-M12
KM31315A	317	180	286	104	158.5	100	20	3-M16
KM31400A	400	299.3	171.45	136	175	108	21	6-M16

NBD
PRECISION TOOL

GK11 SERIES · · · · · ·
THREE-JAW

STEEL BODY SELF-CENTRING CHUCK
GK11系列钢体三爪自定心卡盘

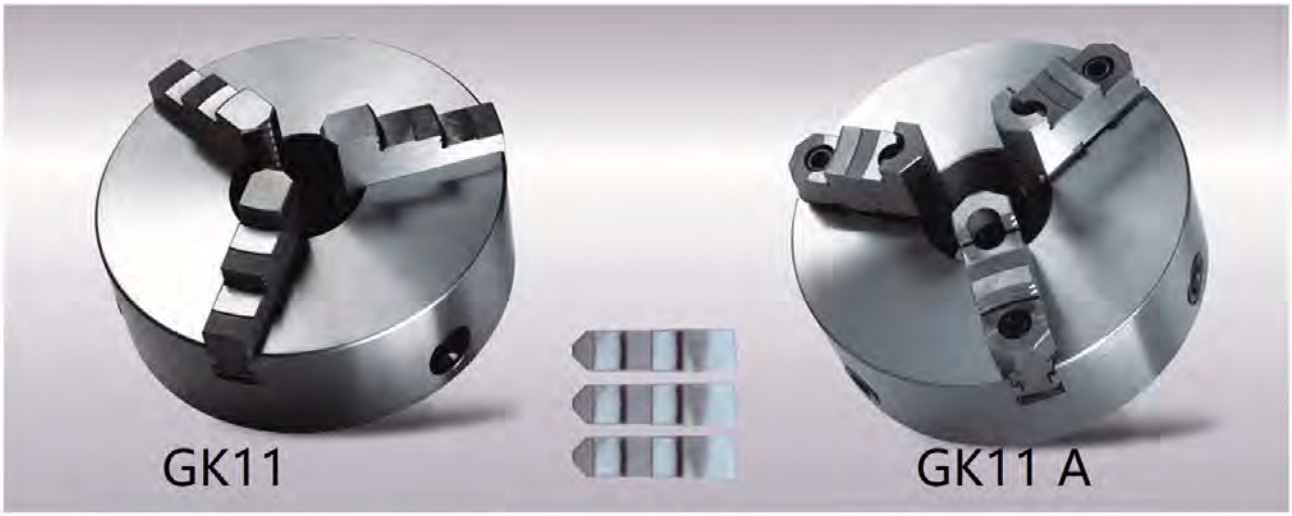



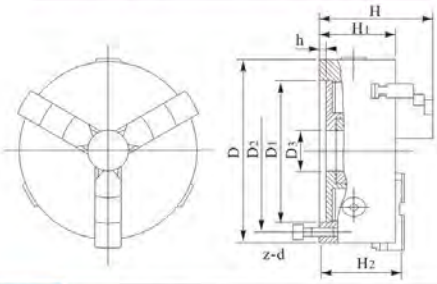

说明 Explain

GK11系列的产品为钢材质，盘体刚性更好，更耐用，转速更高,符合高速切削的需要。
Gk11 series of products are made of steel, with better rigidity, durability and higher speed, which meet the needs of high-speed cutting.

卡盘外径 mm Chuck diameter(mm)	极限转速（钢盘体）RMP MAX RMP(steel body)
80	7600
100	6100
125	4880
160	3820
200	3050
250	2440
320	1940
400	1525
500	1220
630	970
800	700
1000	550
1250	300

此表格极限转速并非切削工作时所允许转速，当卡盘转速超过极限转速的75%时，用户应当自行进行高速试验，得出合适的切削极限转速。
The limit speed in this table is not allowed for cutting operation. When the chuck speed exceeds 75% of the limit speed, the user should carry out the high-speed test and get the appropriate cutting limit speed.

规格表 Specifications

规格/型式 SEPC. /MODEL	D1	D2	D3	H	H1	H2	h	z-d
GK11180	55	66	16	66	50	–	3.5	3-M6
GK11100	72	84	22	74.5	55	–	3.5	3-M8
GK11125	95	108	30	85	58	–	4	3-M8
GK11130	100	115	30	85	58	–	4	3-M8
GK11160	130	142	40	95	65	–	5	3-M8
GK11160A	130	142	40	109	65	71	5	3-M8
GK11165	130	145	40	95	65	–	5	3-M8
GK11165A	130	145	40	109	65	71	5	3-M8
GK11190	155	172	55	109	75	–	5	3-M10
GK11190A	155	172	55	122	75	80	5	3-M10
GK11200	165	180	65	109	75	–	5	3-M10
GK11200A	165	180	65	122	75	80	5	3-M10
GK11240	195	215	70	120	80	–	8	3-M12
GK11240A	195	215	70	133	80	85	8	3-M12
GK11250	206	226	80	120	80	–	5	3-M12
GK11250A	206	226	80	133	80	85	5	3-M12
GK11315	260	285	100	142.5	90	–	6	3-M16
GK11315A	260	285	100	155.5	90	96.5	6	3-M16
GK11320	270	290	100	142.5	90	–	6	3-M16
GK11320A	270	290	100	155.5	90	96.5	6	3-M16
GK11325	272	296	100	142.5	90	–	6	3-M16
GK11325A	272	296	100	155.5	90	96.5	6	3-M16
GK11380	325	350	130	155.5	100	–	6	3-M16
GK11380A	325	350	130	170.5	100	96.5	6	3-M16
GK11400	340	368	130	155.5	100	–	6	3-M16
GK11400A	340	368	130	170.5	100	108.5	6	3-M16
GK11500	440	465	200	176	115	–	6	6-M16
GK11500A	440	465	200	203	115	123	6	6-M16
GK11630	560	595	260	192	130	–	7	6-M16
GK11630A	560	595	260	218	130	138	7	6-M16
GK11800A	710	760	385	249	148	158	8	6-M20
GK111000A	910	950	460	266	165	–	8	6-M24
GK111250A	910	950	500	281	180	–	10	6-M24

NBD®
PRECISION TOOL

K12 SERIES FOUR-JAW

SELF-CENTRING CHUCK
K12系列四爪自定心卡盘

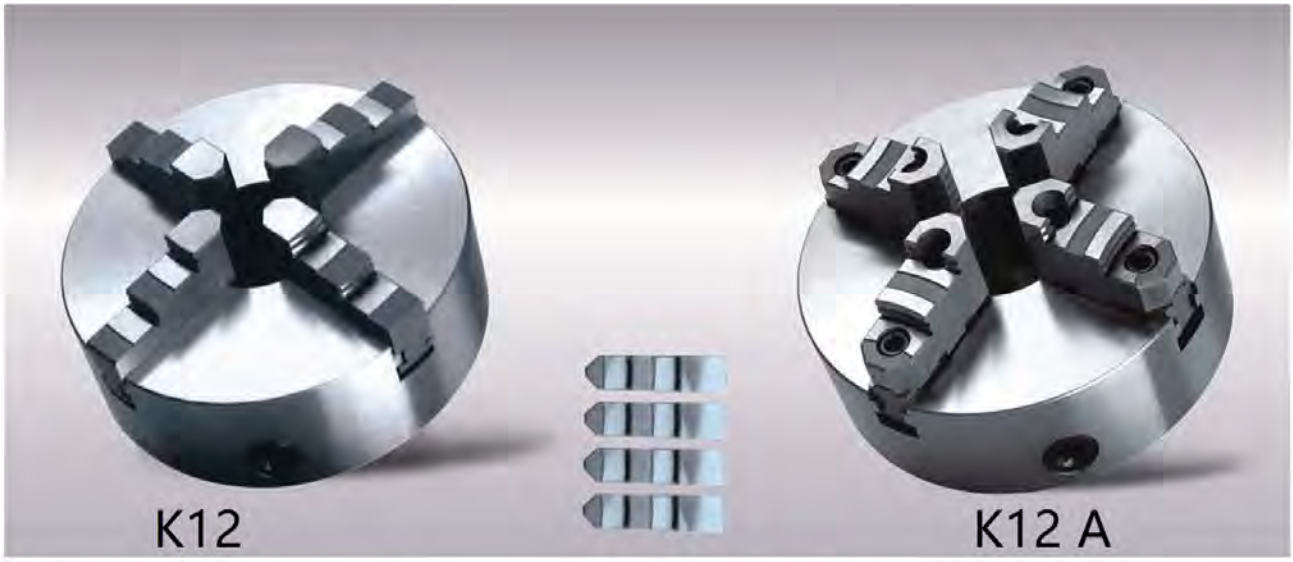



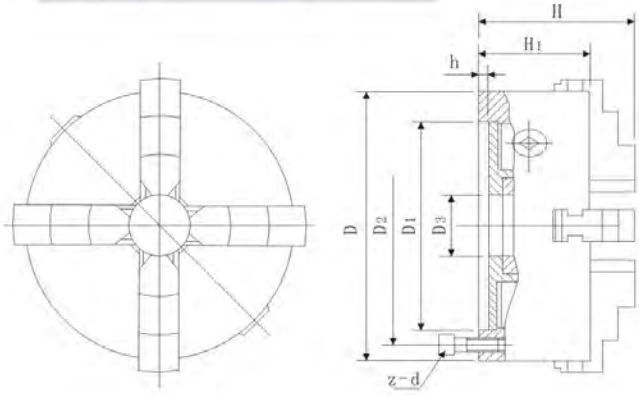

规格表 Specifications

规格/型式 SEPC./MODEL	D1	D2	D3	H	H1	h	z-d
K12 80	55	66	16	66	50	3.5	3-M6
K12 100	72	84	22	74.5	55	3.5	3-M8
K12 125	95	108	30	85	58	4	3-M8
K12 130	100	115	30	85	58	4	3-M8
K12 160	130	142	40	95	65	5	3-M8
K12 160A	130	142	40	109	65	5	3-M8
K12 165	130	145	40	95	65	5	3-M8
K12 165A	130	145	40	109	65	5	3-M8
K12 190	155	172	55	109	75	5	3-M10
K12 190A	155	172	55	122	75	5	3-M10
K12 200	165	180	65	109	75	5	3-M10
K12 200A	165	180	65	122	75	5	3-M10
K12 240	195	215	70	120	80	8	3-M12
K12 240	195	215	70	133	80	8	3-M12
K12 250	206	226	80	120	80	5	3-M12
K12 250	206	226	80	133	80	5	3-M12
K12 315	260	285	100	142.5	90	6	3-M16
K12 315A	260	285	100	155.5	90	6	3-M16
K12 320	270	290	100	142.5	90	6	3-M16
K12 320A	270	290	100	155.5	90	6	3-M16
K12 325	272	296	100	142.5	90	6	3-M16
K12 325A	272	296	100	155.5	90	6	3-M16
K12 380	325	350	130	155.5	100	6	3-M16
K12 380A	325	350	130	170.5	100	6	3-M16
K12 400	340	368	130	155.5	100	6	3-M16
K12 400A	340	368	130	170.5	100	6	3-M16
K12 500	440	465	200	176	115	6	6-M16
K12 500A	440	465	200	203	115	6	6-M16
K12 630	560	595	260	192	130	7	6-M16
K12 630A	560	595	260	218	130	7	6-M16
K12 800A	710	760	385	249	148	8	6-M20
K12 1000A	910	950	460	266	162	8	6-M24

说明 Explain

K12系列四爪自定心卡盘适用于具有一定批量的各种正方型、八棱型等零件的加工，可自动定心，快速夹紧。K12型配带正爪和反爪各一副，可分别使用。

K12 series Four-jaw Self-centring chuck is suitable for batch process of square, eight-square prism accessories and is self centring. Type K12 provides two sets of jaws in different directions, which can be used respectively, Type K12A provides ISO3442 standard jaws.

NBD
PRECISION TOOL

DK12 SERIES FOUR-JAW

SELF-CENTRING CHUCK
德标DK12系列四爪自定心卡盘



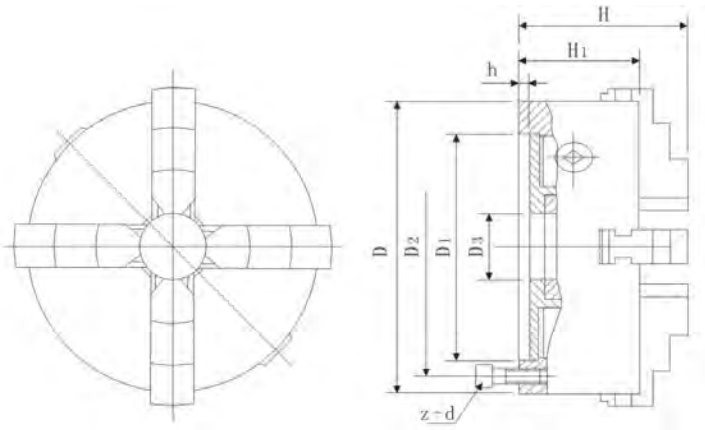

说明 Explain

德标DK12系列　爪自定心卡盘，符合DIN6350标准，采用短圆柱连接形式

German standardized 4-jaw Self-centering Chucks are according to DIN 6350. The chucks of this type are mounted to spindle nose through an adapting flange.

规格表 Specifications

规格/型式 SEPC./MODEL	D1	D2	D3	H	H1	h	z-d
Dk12 80	56	67	16	66	50	3	3-M6
Dk12 100	70	83	22	74.5	55	3	3-M8
Dk12 125	95	108	30	84	58	4	3-M8
Dk12 160	125	140	45	95	65	4	6-M10
DK12 160A	125	140	45	109	65	4	6-M10
Dk12 200	160	176	65	109	75	4	6-M10
DK12 200A	160	176	65	122	75	4	6-M10
Dk12 250	200	224	80	120	80	5	6-M12
DK12 250A	200	224	80	134.5	80	5	6-M12
Dk12 315	260	286	104	131.5	90	5	6-M16
DK12 315A	260	286	104	148.5	90	5	6-M16
Dk12 400	330	362	136	157.5	100	5	6-M16
DK12 400A	330	362	136	167	100	5	6-M16
DK12 500A	420	458	200	203	115	6	6-M16
DK12 630A	545	586	260	218	130	7	6-M16
DK12 800A	710	760	385	249	148	8	6-M20
DK12 1000A	910	950	460	266	165	8	6-M24

NBD
PRECISION TOOL

K72 SERIES FOUR-JAW INDEPENDENT CHUCK

K72系列四爪单动卡盘



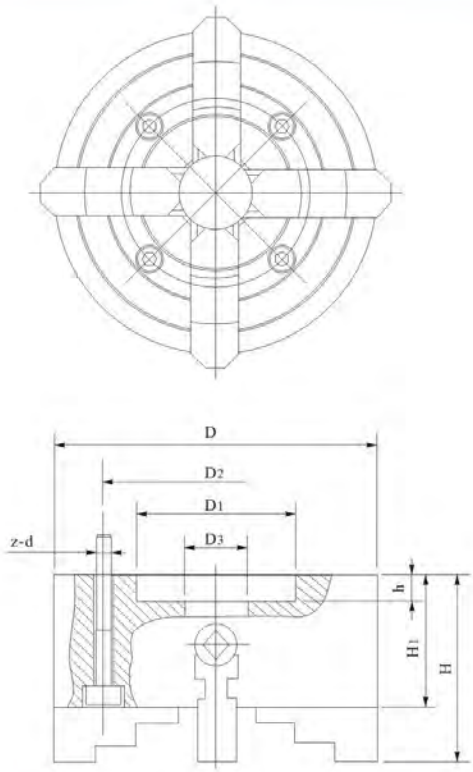

说明 Explain

K72系列四爪单动卡盘采用短圆柱型和短圆锥型。短圆锥型按其与机床主轴连接式分为A型（穿通螺钉连接）、C型（拔盘、螺栓锁紧连接）、D型（拉杆、凸轮锁紧连接）三种型式。

K72 series Four-jaw independent chuck adopts short cylinder and short circular cone shape. Short circular cone shape can be subdivided into two types according to the way of joining with the spindle nose of machine tool:Type A(joined with screw), Type C(bolt locking joint), Type D(pull rod, cam locking joint).

规格表 Specifications

一：短圆柱型
One/Short cylinder type

规格/型式 SEPC./MODEL	D1	D2	D3	H	H1	h	z-d
K7280	55	66	22	59	43	4	4-M6
K72100	72	84	25	77	54	4	4-M8
K72125	95	108	30	78	56	5	4-M8
K72130	65	95	45	93	65	5	4-M10
K72200	75	95	55	107	75	6	4-M10
K72250	110	130	75	120	80	6	4-M12
K72315/K72320	140	165	95	138	90	6	4-M16
K72350	140	168	95	138	90	6	4-M16
K72400	160	185	125	143	95	8	4-M16
K72500	200	236	160	160	105	8	4-M20
K72520	260	300	205	160	105	10	4-M16
K72630	220	258	180	180	116	10	4-M20
K72800	250	300	210	210	135	12	8-M20
K721000	320	370	305	241	148	15	8-M20
K721250	400	500	305	256	165	15	8-M20

NBD®
PRECISION TOOL

K15 SERIES FIVE-JAW

SELF-CENTRING CHUCK
K15系列五爪自定心卡盘



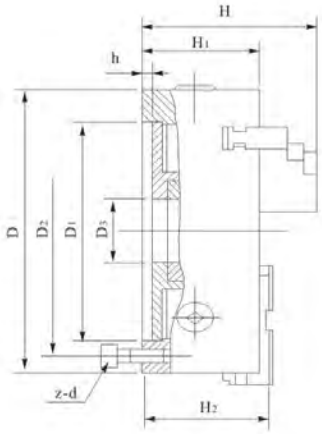



说明 Explain

K15型5爪自定心卡盘为K15、K15A二种型号。K15型配带正爪和反爪各一副，可分别使用，K15A型配带符合ISO3442标准的分离爪。并可根据用户提供软卡爪，经随机配车(磨)后可获得较高定心精度，满足夹持要求。

K15 series 5-jaw Self-centring chuck is subdivided into two types, K15,K15A.Type K11 provides two sets of jaws in different directions which can be used respectively.Type K15A provides ISO3442 standard jaws.Soft jaws are to be provided on request Higher centring accuracy can be achieved after being rubbed on the machine,so as to satisfy the need for holding.

规格表 Specifications

规格/型式 SEPC. /MODEL	D1	D2	D3	H	H1	H2	h	z-d
K15160	130	142	40	95	65	–	5	3-M8
K15200	165	180	65	109	75	–	5	3-M10
K15250	206	226	80	120	80	–	5	3-M12
K15320	270	290	100	142.5	90	–	6	3-M16
K15320A	270	290	100	155.5	90	96.5	6	3-M16
K15400A	340	368	130	170.5	100	108.5	6	3-M16
K15500A	440	465	200	203	115	123	6	3-M16
K15630A	560	595	260	218	130	138	7	3-M16
K15800A	710	760	385	249	148	158	8	6-M20
K151000A	910	950	460	266	165	–	8	6-M24
K151250A	910	950	500	281	180	–	10	6-M24

NBD
PRECISION TOOL

K13 SERIES SIX-JAW

SELF-CENTRING CHUCK

K13系列六爪自定心卡盘





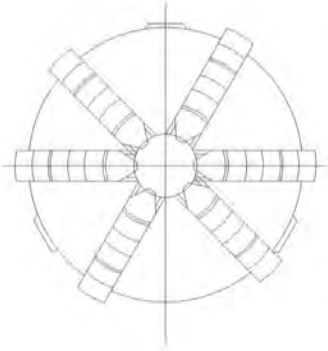

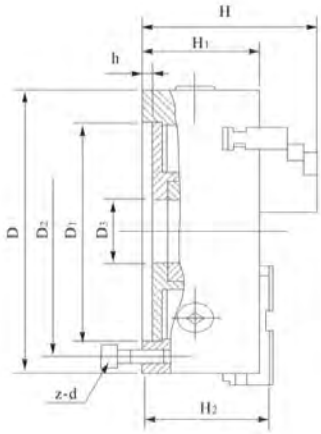



说明 Explain

K13型六爪自定心卡盘为K13、K13A二种型号。K13型配带正爪和反爪各一副，可分别使用，K13A型配带符合ISO3442标准的分离爪。并可根据用户提供软卡爪，经随机配车(磨)后可获得较高定心精度，满足夹持要求。

K13 series SIX-jaw Self-centring chuck is subdivided into two types, K13,K13A.Type K11 provides two sets of jaws in different directions which can be used respectively.Type K13A provides ISO3442 standard jaws.Soft jaws are to be provided on request Higher centring accuracy can be achieved after being rubbed on the machine,so as to satisfy the need for holding.

规格表 Specifications

规格/型式 SEPC. /MODEL	D1	D2	D3	H	H1	H2	h	z-d
K13160	130	142	40	95	65	–	5	3-M8
K13200	165	180	65	109	75	–	5	3-M10
K13250	206	226	80	120	80	–	5	3-M12
K13320	270	290	100	142.5	90	–	6	3-M16
K13320A	270	290	100	155.5	90	96.5	6	3-M16
K13400A	340	368	130	170.5	100	108.5	6	3-M16
K13500A	440	465	200	203	115	123	6	3-M16
K13630A	560	595	260	218	130	138	7	3-M16
K13800A	710	760	385	249	148	158	8	6-M20
K131000A	910	950	460	266	165	–	8	6-M24
K131250A	910	950	500	281	180	–	10	6-M24

NBD
PRECISION TOOL

K72 SERIES FOUR-JAW

INDEPENDENT CHUCK

K72系列四爪单动卡盘



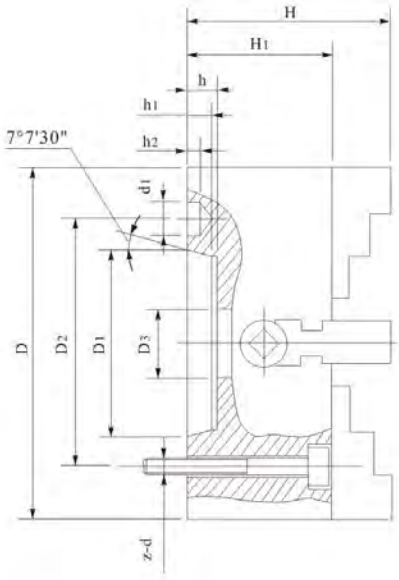

说明 Explain

K72系列四爪单动卡盘采用短圆柱型和短圆锥型。短圆锥型按其与机床主轴端部连接式分为A型（穿通螺钉连接）、C型（拔盘、螺栓锁紧连接）、D型（拉杆、凸轮锁紧连接）三种型式。

K72 series Four-jaw independent chuck adopts short cylinder and short circular cone shape. Short circular cone shape can be subdivided into two types according to the way of joining with the spindle nose of machine tool:Type A(joined with screw), Type C(bolt locking joint), Type D(pull rod, cam locking joint).

规格表 Specifications

二：A型：穿通螺钉连接
Two/Type A:Joined with screw

规格/型式 SEPC./MODEL	D1	D2	D3	H	H1	h	h1	h2	d1	z-d
K72160/A2-4	63.513	82.6	45	93	65	13	10	6.5	14.7	4-M10
K72200/A2-4	63.513	82.6	56	107	75	13	10	6.5	14.7	4-M10
K72250/A2-4	63.513	82.6	61	120	80	13	10	6.5	14.7	4-M10
K72320/A2-4	63.513	82.6	61	138	90	-	10	6.5	14.7	4-M10
K72200/A2-6	106.375	133.4	56	107	75	16	13	6.5	19.5	4-M12
K72250/A2-6	106.375	133.4	75	120	80	16	13	6.5	19.5	4-M12
K72320/A2-6	106.375	133.4	95	138	90	16	13	6.5	19.5	4-M12
K72400/A2-6	106.375	133.4	95	143	95	16	13	6.5	19.5	4-M12
K72500/A2-6	106.375	133.4	103	160	105	-	13	6.5	19.5	4-M12
K72520/A2-8	139.719	171.4	75	120	80	18	14	8	24.2	4-M16
K72320/A2-8	139.719	171.4	95	138	90	18	14	8	24.2	4-M16
K72400/A2-8	139.719	171.4	125	143	95	18	14	8	24.2	4-M16
K72500/A2-8	139.719	171.4	136	160	105	-	14	8	24.2	4-M16
K72320/A2-11	196.869	235	95	138	90	20	16	10	29.4	4-M20
K72400/A2-11	196.869	235	125	143	95	20	16	10	29.4	4-M20
K72500/A2-11	196.869	235	160	160	105	20	16	10	29.4	4-M20
K72630/A2-11	196.869	235	180	180	115	20	16	10	29.4	4-M20
K72500/A2-15	285.775	330.2	160	160	105	21	17	10	35.7	4-M24
K72630/A2-15	285.775	330.2	180	180	115	21	17	10	35.7	4-M24
K72800/A2-11	196.869	235	180	210	135	20	16	10	29.4	8-M20
K72800/A2-15	285.775	330.2	180	210	135	21	17	10	35.7	8-M22
K721000/A2-11	196.869	235	180	236	145	20	16	10	29.4	8-M20
K721000/A2-15	285.775	330.2	280	236	145	21	17	20	35.7	8-M24
K721250/A2-15	285.775	330.2	280	251	160	21	17	20	35.7	8-M24
K721400/A2-15	285.775	330.2	280	246	155	21	17	20	35.7	8-M20
K721400/A2-20	412.775	463.6	305	246	155	23	19	20	42.1	8-M24
K721600/A2-15	285.775	330.2	280	266	175	21	17	20	35.7	8-M20
K721600/A2-20	412.775	463.6	305	266	175	23	19	20	42.1	8-M24

NBD
PRECISION TOOL

K72 SERIES FOUR-JAW

INDEPENDENT CHUCK

K72系列四爪单动卡盘



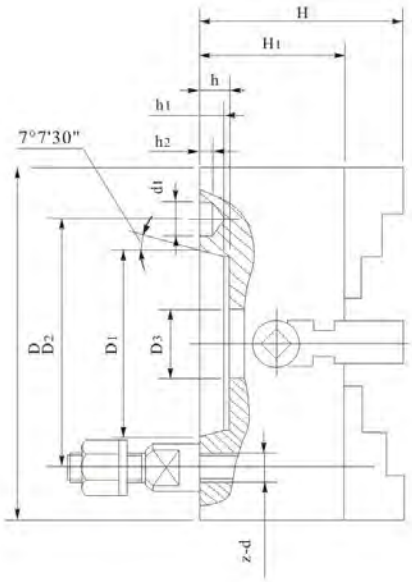

说明 Explain

K72系列四爪单动卡盘采用短圆柱型和短圆锥型。短圆锥型按其与机床主轴端部连接式分为A型（穿通螺钉连接）、C型（拔盘、螺栓锁紧连接）、D型（拉杆、凸轮锁紧连接）三种型式。

K72 series Four-jaw independent chuck adopts short cylinder and short circular cone shape. Short circular cone shape can be subdivided into two types according to the way of joining with the spindle nose of machine tool:Type A(joined with screw), Type C(bolt locking joint), Type D(pull rod, cam locking joint).

规格表 Specifications

三：C型：拔盘螺栓锁紧连接
Three/Type C:Bolt locking joint

规格/型式 SEPC./MODEL	D1	D2	D3	H	H1	h	h1	h2	d1	z-d
K72160/C4	63.513	82.6	45	93	65	13	10	6.5	14.7	3-M10
K72200/C4	63.513	82.6	56	107	75	13	10	6.5	14.7	3-M10
K72250/C4	63.513	82.6	61	120	80	–	10	6.5	14.7	3-M10
K72320/C4	63.513	82.6	61	138	90	–	10	6.5	14.7	3-M10
K72200/C6	106.375	133.4	56	107	75	16	13	6.5	19.5	4-M12
K72250/C6	106.375	133.4	75	120	80	16	13	6.5	19.5	4-M12
K72320/C6	106.375	133.4	95	138	90	16	13	6.5	19.5	4-M12
K72400/C6	106.375	133.4	95	143	95	16	13	6.5	19.5	4-M12
K72500/C6	106.375	133.4	103	160	105	–	13	6.5	19.5	4-M12
K72520/C8	139.719	171.4	75	120	80	18	14	8	24.2	4-M16
K72320/C8	139.719	171.4	95	138	90	18	14	8	24.2	4-M16
K72400/C8	139.719	171.4	125	143	95	18	14	8	24.2	4-M16
K72500/C8	139.719	171.4	136	160	105	–	14	8	24.2	4-M16
K72320/C11	196.869	235	95	138	90	20	16	10	29.4	6-M20
K72400/C11	196.869	235	125	143	95	20	16	10	29.4	6-M20
K72500/C11	196.869	235	160	160	105	20	16	10	29.4	6-M20
K72500/C15	285.775	330.2	160	160	105	21	17	10	35.7	6-M20
K72630/C8	139.719	171.4	130	180	115	18	14	8	24.2	4-M16
K72630/C11	196.869	235	180	180	115	20	16	10	29.4	6-M20
K72630/C15	285.775	330.2	180	180	115	21	17	10	35.7	6-M24
K72800/C11	196.869	235	180	210	135	20	16	10	29.4	6-M20
K72800/C15	285.775	330.2	180	210	135	21	17	10	35.7	6-M24
K721000/C11	196.869	235	180	236	145	20	16	10	29.4	6-M20
K721000/C15	285.775	330.2	280	236	145	21	17	10	35.7	6-M24
K721250/C11	196.869	235	180	251	160	20	16	10	29.4	6-M20
K721250/C15	285.775	330.2	280	251	160	21	17	10	35.7	6-M24
K721400/C15	285.775	330.2	280	246	155	21	17	10	35.7	6-M24
K721600/C15	285.775	330.2	280	266	175	21	17	10	35.7	6-M24

NBD
PRECISION TOOL

K72 SERIES FOUR-JAW

INDEPENDENT CHUCK
K72系列四爪单动卡盘



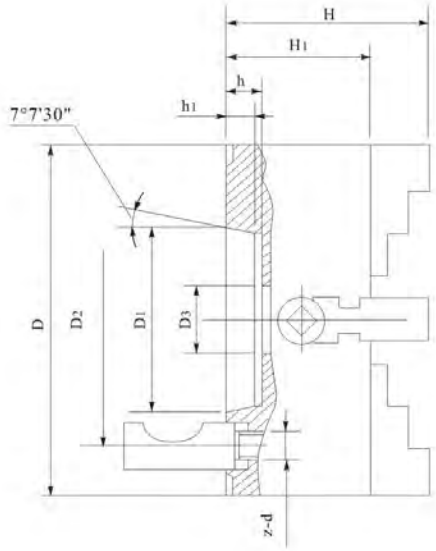

说明 Explain

K72系列四爪单动卡盘采用短圆柱型和短圆锥型。短圆锥型按其与机床主轴端部连接式分为A型（穿通螺钉连接）、C型（拔盘、螺栓锁紧连接）、D型（拉杆、凸轮锁紧连接）三种型式。

K72 series Four-jaw independent chuck adopts short cylinder and short circular cone shape. Short circular cone shape can be subdivided into two types according to the way of joining with the spindle nose of machine tool:Type A(joined with screw), Type C(bolt locking joint), Type D(pull rod, cam locking joint).

规格表 Specifications

四：D型：拉杆、凸轮锁紧连接
Four/Type D:pull rod,can locking joint

规格/型式 SEPC./MODEL	D1	D2	D3	H	H1	h	h1	z-d
K72200/D4	63.513	82.6	56	107	75	13	10	3-M10X1
K72250/D4	63.513	82.6	61	120	80	-	10	3-M10X1
K72320/D4	63.513	82.6	61	138	90	-	10	3-M10X1
K72250/D6	106.375	133.4	75	120	80	16	13	6-M16X1.5
K72320/D6	106.375	133.4	95	138	90	16	13	6-M16X1.5
K72400/D6	106.375	133.4	95	143	95	16	13	6-M16X1.5
K72500/D6	106.375	133.4	103	160	105	-	13	6-M16X1.5
K72320/D8	139.719	171.4	95	138	90	18	14	6-M20X1.5
K72400/D8	139.719	171.4	125	143	95	18	14	6-M20X1.5
K72500/D8	139.719	171.4	136	160	105	-	14	6-M20X1.5
K72400/D11	196.869	235	125	143	95	20	16	6-M22X1.5
K72500/D11	196.869	235	160	160	105	20	16	6-M22X1.5
K72630/D11	196.869	235	180	180	115	20	16	6-M22X1.5
K72500/D15	285.775	330.2	160	160	105	21	17	6-M24X1.5
K72630/D15	285.775	330.2	180	180	115	21	17	6-M24X1.5
K72800/D11	196.869	235	180	210	135	20	16	6-M22x1.5
K72800/D15	285.775	330.2	180	210	135	21	17	6-M24x1.5
K721000/D11	196.869	235	180	236	145	20	16	6-M22x1.5
K721000/D15	285.775	330.2	280	236	145	21	17	6-M24x1.5
K721250/D15	285.775	330.2	280	251	160	21	17	6-M24x1.5
K721400/D15	285.775	330.2	280	246	155	21	17	6-M24x1.5
K721600/D15	285.775	330.2	280	266	175	21	17	6-M24x1.5

RZ SOFT JAWS 软卡爪



说明 Explain

- K11、K10、K12系列卡盘可按用户要求提供各种软卡爪
- 软卡爪包括：整体软爪和软顶爪

- All kinds of soft jaws can be provided as the request of customers for K11,K10,K12 series chucks.
- Soft jaws include one-piece soft jaws and soft top jaws.

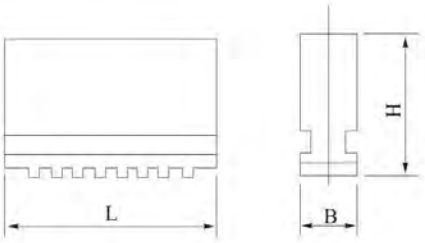

整体软爪 One-piece soft jaws

型号/规格 MODEL	80	100	125	130	160	165	190	200	240	250	315 320	380 400
L	32	43	56	56	70	70	86	86	105	105	130	143
B	12	15	16	16	18.5	18.5	22	22	27	27	36	36
H	33	38	45	45	54	54	61	61	69	69	91	95

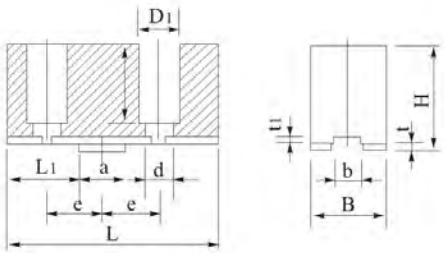

软顶爪（A型） Soft top jaws(Type A)

型号/规格 MODEL	L	L1	B	H	a	b	e	t	t1	c	d	D1
160A	74	36	25	47	12.675	7.94	19	3	4	36	11	17
200A	90	43	30	55	12.675	7.94	22.2	3	4	41	11	17
250A	110	50	36	63	19.025	12.7	27	3	4	50	13	20
315A 325A	120	57	45	70	19.025	12.7	31.75	3	4	54	13	20
400A	135	67	45	85	19.025	12.7	38.1	6	4	66	18	26
500A	160	80	50	90	19.025	12.7	38.1	6	4	68	22	33

NBD
PRECISION TOOL

K11,K11□/□K15 THREE-JAW

JAW FOR 3 JAW SELF CENTRING CHUCK
三爪自定心卡盘卡爪

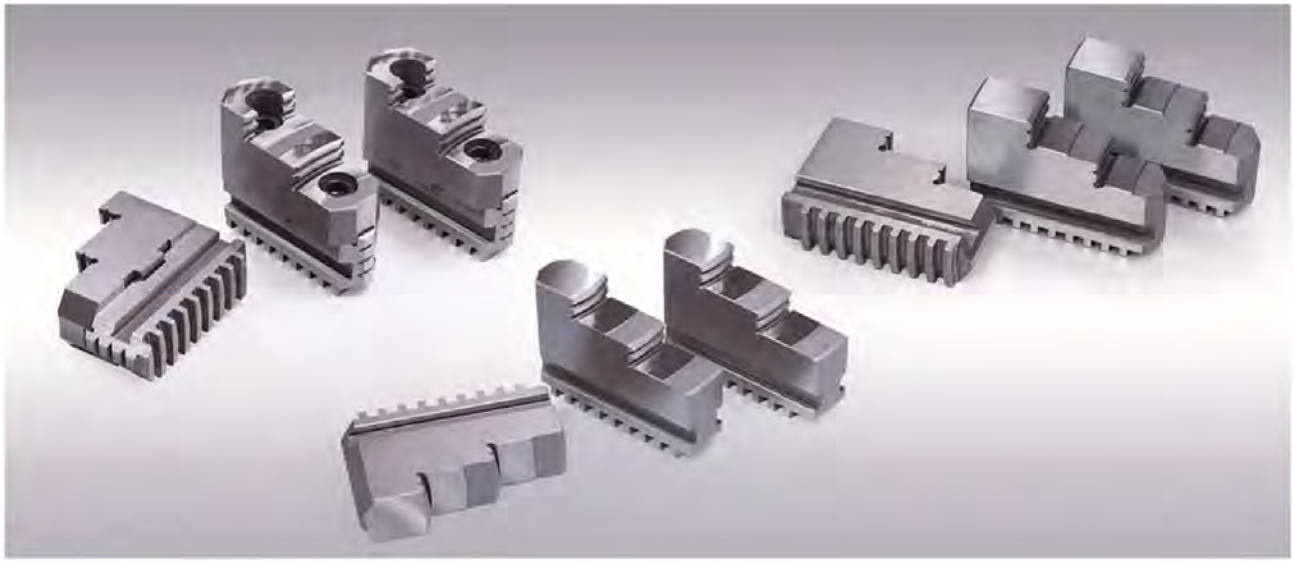

说明 Explain

- 卡爪分为：整体爪、分离爪。
- 可按用户要求提供各型号硬卡爪。

- Hard jaws include one-piece jaws and two-picece jaws.
- All kinds of hard jaws can be provided as the request of customers.

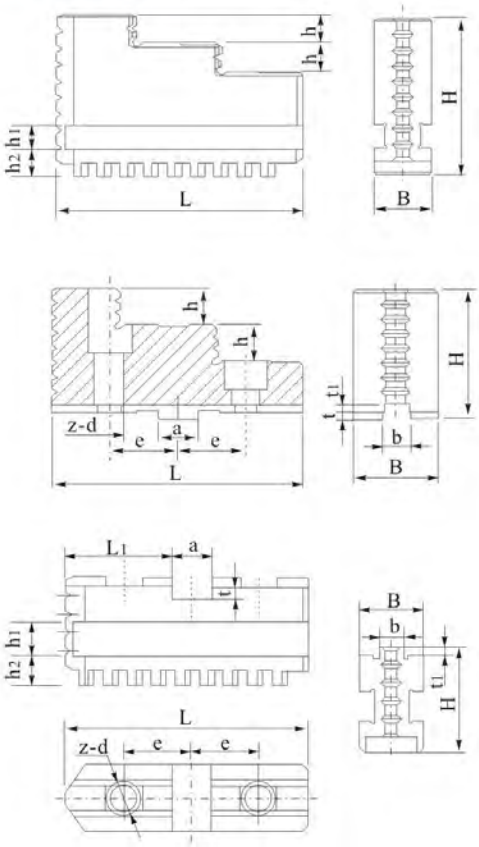

规格表 Specifications

型号/规格 MODEL	80	100	125	160	200	250	315	400	500
L	32	42	56	70	85	105	125	138	168
B	12	15	16	18.5	22	27	36	36	46
H	33	38	46	54	61	69	86	90	105
h	6.5	7	9	12	12	12	17	17	20
h1	6	6.5	7	9	10	12	13.5	13.5	17
h2	7	8	8	10	10	10	13	13	18

型号/规格 MODEL	160	200	250	320	400	500
L	68	80	96	116	127	130
B	25	30	36	42	45	50
H	41	45	51	62	68	86
h	9	10.5	12.5	17	17	20
a	12.675				19.025	
b	7.94				12.7	
e	19	22.2	27	31.75		38.1
t			3			6
t1				4		
z-d	2-φ11	2-φ11	2-φ13	2-φ13	2-φ18	2-φ22

型号/规格 MODEL	160	200	250	320	400	500
L	64	80	95	113	127	165
B	20	22	27	36	36	46
H	33	35	35	43	46	55
L1	29	34.9	40	48	57	48.5
a	12.675				19.025	
b	7.94				12.7	
e	19	22.2	27	31.75	38.1	38.1
t			4			7
t1				3		
z-d	2-M10	2-M10	2-M12	2-M12	2-M16	4-M20
h1	9	10	12	13.5	13.5	17
h2	10	10	10	13	13	18

TK21 THREE-JAW

FRONT THREE-JAW CHUCK
前穿式三爪卡盘

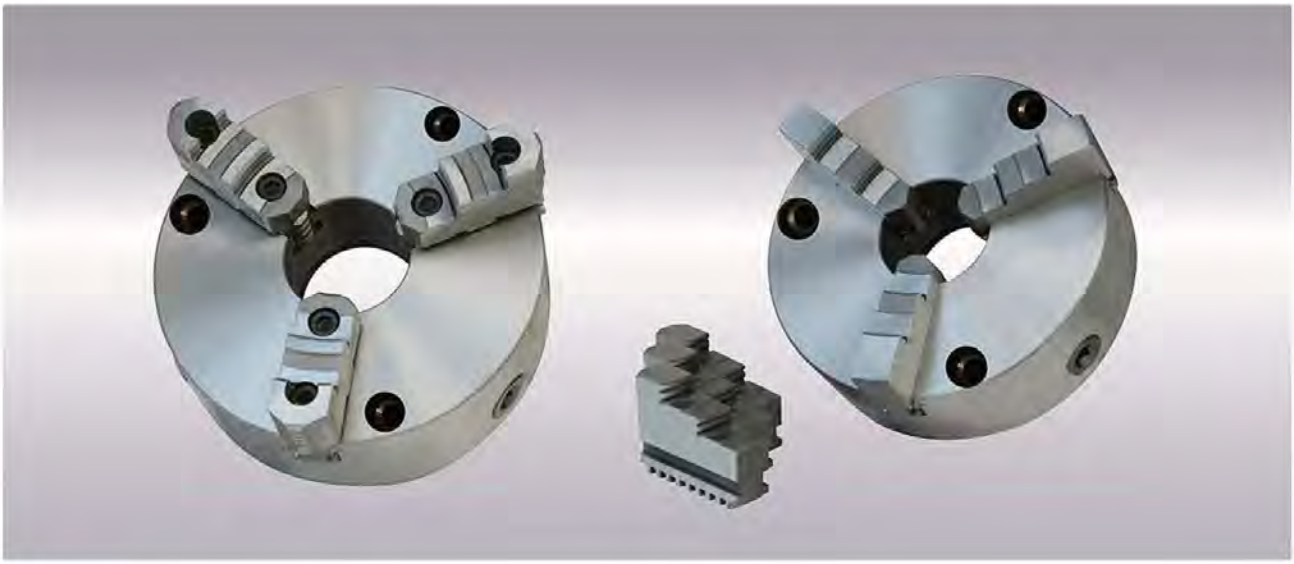

说明 Explain

- 前穿式三爪卡盘，是在普通卡盘基础上进行改进，采用前穿螺母锁紧，比起传统结构的卡盘使用的便捷性上有很大的提升。为方便客户使用，同时提供配套的软爪选购。

- Front three-jaw chuck, which is modified based on the common chuck is fastened by front screws. Compared to traditional chucks, its convenience is largely improved. In order to make the use more convenient, it also is optional equipped with soft jaw.

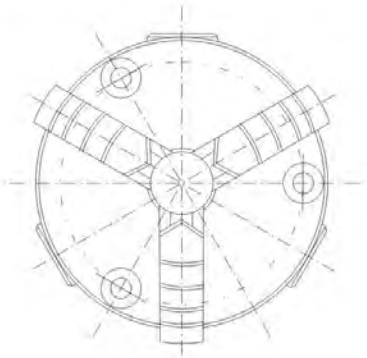

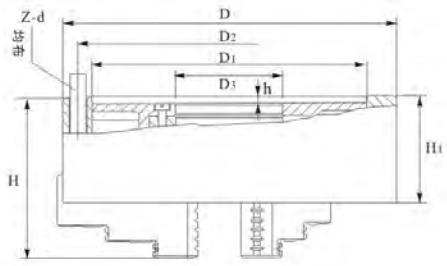

规格表 Specifications

型号/规格 SEPC./MODEL	D1	D2	D3	H	H1	h	z-d
TK2180	55	66	16	66	50	3.5	3-M6
TK21100	72	84	22	74.5	55	3.5	3-M8
TK21125	95	108	30	85	58	4	3-M8
TK21130	100	115	30	85	58	4	3-M8
TK21160	130	142	40	95	65	5	3-M8
TK21160A	130	142	40	109	65	5	3-M8
TK21165	130	145	40	95	65	5	3-M8
TK21165A	130	145	40	109	65	5	3-M8
TK21190	155	172	55	109	75	5	3-M10
TK21190A	155	172	55	122	75	5	3-M10
TK21200	165	180	65	109	75	5	3-M10
TK21200A	165	180	65	122	75	5	3-M10
TK21240	195	215	70	120	80	8	3-M12
TK21240A	195	215	70	133	80	8	3-M12
TK21250	206	226	80	120	80	5	3-M12
TK21250A	206	226	80	133	80	5	3-M12
TK21315	260	285	100	142.5	90	6	3-M16
TK21315A	260	285	100	155.5	90	6	3-M16
TK21320	270	290	100	142.5	90	6	3-M16
TK21320A	270	290	100	155.5	90	6	3-M16
TK21325	272	296	100	142.5	90	6	3-M16
TK21325A	272	296	100	155.5	90	6	3-M16
TK21380	325	350	130	155.5	100	6	3-M16
TK21380A	325	350	130	170.5	100	6	3-M16
TK21400	340	368	130	155.5	100	6	3-M16
TK21400A	340	368	130	170.5	100	6	3-M16
TK21500	440	465	200	176	115	6	6-M16
TK21500A	440	465	200	203	115	6	6-M16
TK21630	560	595	260	192	130	7	6-M16
TK21630A	560	595	260	218	130	7	6-M16
TK21800A	710	760	385	249	148	8	6-M20
TK211000A	910	950	460	266	165	8	6-M24
TK211250A	910	950	500	281	180	10	6-M24

NBD®
PRECISION TOOL

TK22 FOUR-JAW

FRONT FOUR-JAW SELF-CEXTERING CHUCK

前穿式四爪自定心卡盘

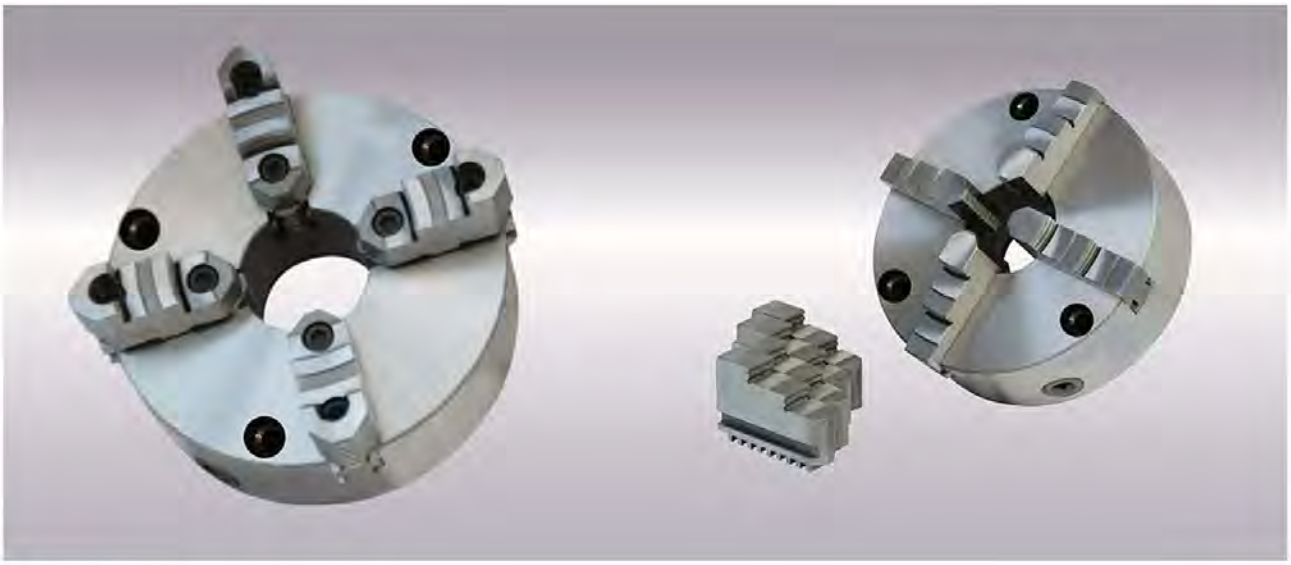

说明 Explain

- 前穿式四爪自定心卡盘，是在普通卡盘基础上进行改进，采用前穿螺母锁紧，比起传统结构的卡盘使用的便捷性上有很大的提升。为方便客户使用，同时提供配套的软爪选购。

- Front four-jaw self-centering chuck,whick is modified based on the common chuck, is fastened by front screws. Compared to traditional chucks, its convenience is largely improved. In order to make the use more convenient, it also is optional equipped with soft jaw.

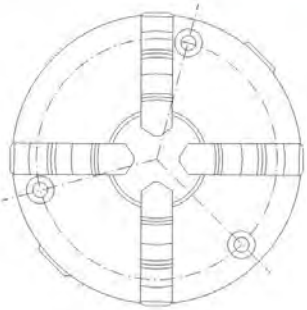

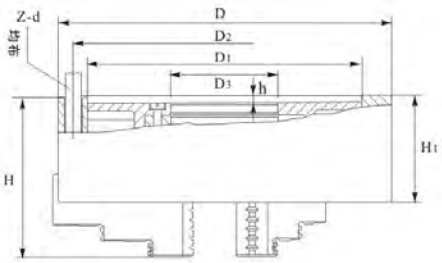

规格表 Specifications

型号/规格 SEPC./MODEL	D1	D2	D3	H	H1	h	z-d
TK2280	55	66	16	66	50	3.5	3-M6
TK22100	72	84	22	74.5	55	3.5	3-M8
TK22125	95	108	30	85	58	4	3-M8
TK22130	100	115	30	85	58	4	3-M8
TK22160	130	142	40	95	65	5	3-M8
TK22160A	130	142	40	109	65	5	3-M8
TK22165	130	145	40	95	65	5	3-M8
TK22165A	130	145	40	109	65	5	3-M8
TK22190	155	172	55	109	75	5	3-M10
TK22190A	155	172	55	122	75	5	3-M10
TK22200	165	180	65	109	75	5	3-M10
TK22200A	165	180	65	122	75	5	3-M10
TK22240	195	215	70	120	80	8	3-M12
TK22240A	195	215	70	133	80	8	3-M12
TK22250	206	226	80	120	80	5	3-M12
TK22250A	206	226	80	133	80	5	3-M12
TK22315	260	285	100	142.5	90	6	3-M16
TK22315A	260	285	100	155.5	90	6	3-M16
TK22320	270	290	100	142.5	90	6	3-M16
TK22320A	270	290	100	155.5	90	6	3-M16
TK22325	272	296	100	142.5	90	6	3-M16
TK22325A	272	296	100	155.5	90	6	3-M16
TK22380	325	350	130	155.5	100	6	3-M16
TK22380A	325	350	130	170.5	100	6	3-M16
TK22400	340	368	130	155.5	100	6	3-M16
TK22400A	340	368	130	170.5	100	6	3-M16
TK22500	440	465	200	176	115	6	3-M16
TK22500A	440	465	200	203	115	6	6-M16
TK22630	560	595	260	192	130	7	6-M16
TK22630A	560	595	260	218	130	7	6-M16
TK22800A	710	760	385	249	148	8	6-M20
TK22100A	910	950	460	266	165	8	6-M24
TK221250A	910	950	500	281	180	10	6-M24

FLANGE PLATE FOR MACHINE TOOL

FLANGE PLATE FOR MACHINE TOOL A2-TYPE

机床用法兰盘 A2型



说明 Explain

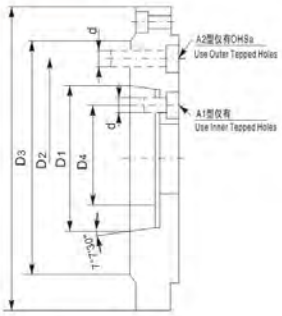

A型 (A1, A2)

- 我公司为客户提供各种连接法兰，如有需要请咨询我公司销售人员。
- Our company provide all kinds of joint flanges, you can consult our sales for any needs.

法兰型号/Flang type	D	D1	D2	D3	D4	d
FL160A2-4	160	63.513	82.6	108	–	–
FL160A2-5	160	82.563	104.8	133	61.9	–
FL200A2-4	200	63.513	82.6	108	–	–
FL200A2-5	200	82.563	104.8	133	61.9	–
FL200A2-6	200	106.375	133.4	165	82.6	–
FL250A2-6	250	106.375	133.4	165	82.6	–
FL250A2-8	250	139.719	171.4	210	111.1	–
FL320A2-6	320	106.375	133.4	165	82.6	–
FL320A2-8	320	139.719	171.4	210	111.1	–
FL320A2-11	320	196.869	235	280	165.1	–
FL400A2-8	400	139.719	171.4	210	111.1	–
FL400A2-11	400	196.869	235	280	165.1	–
FL500A2-11	500	196.869	235	280	165.1	–
FL630A2-11	630	196.869	235	280	165.1	–
FL630A2-15	630	285.775	330.2	380	247.6	–

NBD PRECISION TOOL

0–200 三爪中空油压夹头（不含连接板）

3 – JAW WEDGE TYPE THROUGH HOLE POWER CHUCK(WITHOUT ADAPTOR)

1.超大的貫通孔徑：
爲楔型且具有最大的貫通孔徑。
2.高速回轉：
由强力的夾持力與小型輕量化而高速回轉時性能更能安定，能貢獻機械能力的提升。
3.强力的夾持力：
具有特殊楔型構造與在各零件及摺動部份均有經過硬化，研磨加工而成爲高剛性。
4.高精度、高耐久性：
剛性提升，特殊楔采用與優良夾頭滑脂的使用，可實現長時間安定的夾持力、高精度。

1.More alrge bore:
It's a wedge type with the largest bore.
2.Highest revolution:
With the strongest gripping power and the small sized light weight it is able to be more stable while at a highest revolution .That's more favorable for taking up the machine's capacity.
3.Strongest gripping force:
The special wedge mechanism and each of the parts including the part of flied with hardening and machining make it harder.
4.High accuracy and high endurance:
Owing to adaption of special hardening and a special wedge also with advance chuck grease make it as a long–time stable grasping power and high accuracy.



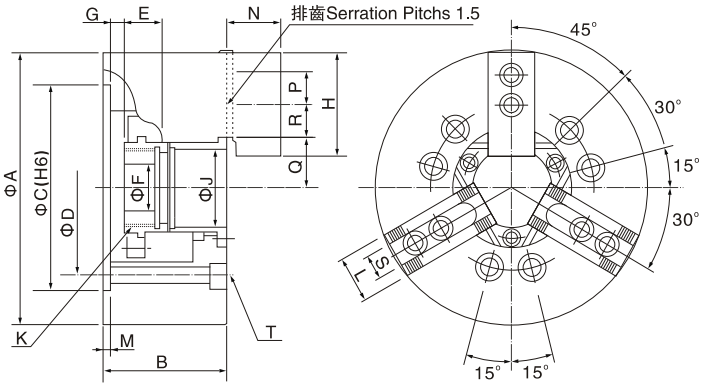

規格 SPECIFICATIONS:

型式 Model / 尺寸 Dim	O–205	O–206	O–208	O–210	O–212	O–215	O–218
通孔徑 Tthrough–Hole(mm)	Φ33	Φ45	Φ52	Φ75	Φ91	Φ117.5	Φ117.5
柱塞行程 Plunger Atroke(mm)	10	12	16	19	23	23	23
爪行程（直徑） Jaw Stroke(mm)	5.4	5.5	7.4	8.8	10.6	10.6	10.6
最大拉杆推力 Max.Draw Bar Pull Force(kgf)	1700	2200	3500	4300	5600	7240	7240
最大夾持力 Max.Gripping Force(kgf)	3600	5700	8900	11300	14680	18355	18355
最大速度 Max.Speed(r.p.m)	7000	6000	4900	4200	3300	2500	2000
重量 Weight(kg)	7	13.5	23	35	56.5	111	164
慣性矩 Moment of Inertial(kgf–m²)	0.0175	0.057	0.17	0.315	0.737	2.27	4.45
適合油壓缸 Matching Cylinder	M1036	M1246	M1552	M1875	M2091	M2511	M2511
最大使用油壓力 Max.OperatingPressure(kgf/cm²)	29.6	28.5	6.5	27.5	27.5	23.5	23.5
適合生爪 Matching Soft Jaw 適合硬爪 Matching Hard Jaw	HC05 HJ05	HC06 HJ06	HC08 HJ08	HC10 HJ10	HC12 HJ12	HC15 HJ15	HC15 HJ15

尺寸表 DIMENSIONS:

型式 Model / 尺寸 Dim	O–205	O–206	O–208	O–210	O–212	O–215	O–218
A	135	169	210	254	304	381	450
B	60	81	91	100	110	133	133
C(H6)	110	140	170	220	220	300	300
D	82.55	104.78	133.35	171.45	171.45	235	235
E	20	19	20.5	25	28	43	43
F	12	20	30	45	50	60	60
G max.	1	11	14.5	8.5	8	7	7
G min.	–9	–1	–1.5	–10.5	–15	–16	–16
M	4	5	5	5	6	6	6
J	33	45	52	75	91	117.5	117.5
K max.	M40x1.5	M55x2	M60x2	M85x2	M100x2	M130x2	M130x2
L	23	32	37	42	52	62	62
H	54	73	95	110	130	165	165
N	26	37	38	43	51	66	66
P	14	20	25	30	30	43	43
Q max.	26.5	32	38.7	51	61.3	82	82
Q min.	23.8	29.25	35	46.6	56	76.7	76.7
R max.	19.75	22.75	29.75	33.75	45.75	46.75	79.25
R min.	7.75	9.25	14.75	14.25	15.75	13.75	13.75
S	10	12	14	16	21	24	24
T	3–M10x60	6–M10x80	6–M12x90	6–M16x100	6–M16x110	6–M20x135	6–M20x135

0T–200 二爪中空油压夹头（不含连接板）

2–JAW WEDGE TYPE THROUGH HOLE POWER CHUCK(WITHOUT ADAPTOR)

1.OT200型夹頭采用高級合金剛材質，所有滑動面經表面硬化及研磨處理，以提高回轉精度及耐久性，潤滑嘴位於基爪。
2.基爪：
1.5mm×60°據齒狀缺口。
3.安裝：
配合件直接安裝并符合DIN,BS,ISO,ASA,B5–9,A型之軸標準。
1.All sliding surfaces are hardened and ground for accurate actual running and long service repeatability.Lubrication nipple in each base jaw.
2.Base jaw:
1.5mm×60°serrtion.
3.Mounting:
Adaptor mounting to fit with DIN,BS,ISO,ASA,B5–9,type A spindles.

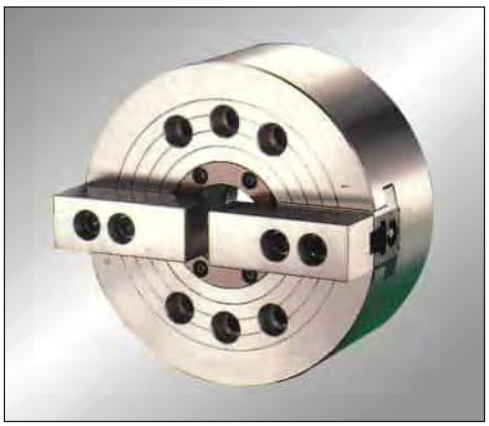

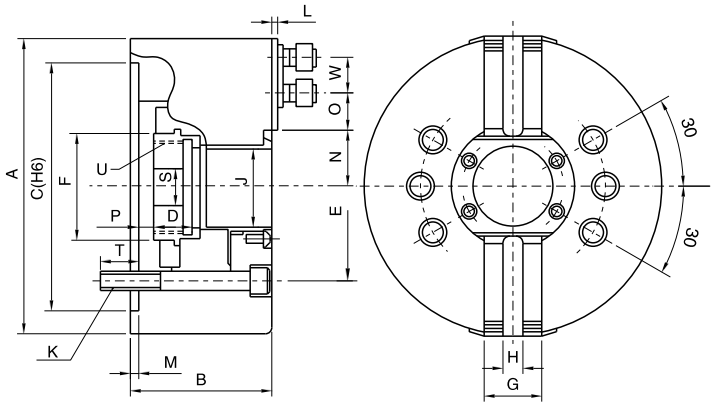

规格 SPECIFICATIONS:

型式 Model / 尺寸 Dim	OT–205	OT–206	OT–208	OT–210	OT–212	OT–215
通孔徑 Tthrough–Hole(mm)	Φ33	Φ45	Φ52	Φ75	Φ91	Φ117.5
柱塞行程 Plunger Atroke(mm)	10	12	16	19	23	23
爪行程（直徑） Jaw Stroke(mm)	5.4	5.5	7.4	8.8	10.6	10.6
最大拉杆推力 Max.Draw Bar Pull Force(kgf)	1189	1479	2330	2906	3739	4793
最大夹持力 Max.Gripping Force(kgf)	2447	3875	5930	7546	9789	12236
最大速度 Max.Speed(r.p.m)	7000	6000	4900	4200	3300	2500
重量 Weight(kg)	6.8	12.8	22	34	55	106
適合油壓缸 Matching Cylinder	M1036	M1246	M1552	M1875	M2091	M2511
最大使用油壓力 Max.OperatingPressure(kgf/cm²)	19.5	18.9	17.3	18.4	18.4	15.3
適合生爪 Matching Soft Jaw / 適合硬爪 Matching Hard Jaw	HC05 HJ05	HC06 HJ06	HC08 HJ08	HC10 HJ10	HC12 HJ12	HC15 HJ15

尺寸表 DIMENSIONS:

型式 Model / 尺寸 Dim	O–205	O–206	O–208	O–210	O–212	O–215
A	135	169	210	254	304	381
B	60	81	91	100	110	133
C(H6)	110	140	170	220	220	300
D	20	19	20.5	25	28	43
E	82.55	104.78	133.35	171.45	171.45	235
M	4	5	5	5	6	6
G	23	32	37	42	52	62
H	10	12	14	16	21	24
J	33	45	52	75	91	117.5
K	3–M10	6–M10	6–M12	6–M16	6–M16	6–M20
L	2	2	2	2	2	5
F	45	60	66	94	108	139
N max	26.5	32	38.7	51	61.3	82
N min	23.8	29.25	35	46.6	56	76.7
O max	19.75	22.75	29.75	33.75	45.75	46.75
O min	7.75	9.25	14.75	14.25	15.75	13.75
P max	1	11	14.5	8.5	8	7
P min	–9	–1	–1.5	–10.5	–15	–16
S	12	20	30	45	50	60
T	15.5	16	20	22	23	30
U max	M40x1.5	M55x2	M60x2	M85x2	M100x2	M130x2
W	14	20	25	30	30	43

0–200A 三爪高速中空油压夹头（包含连接板）

3 – JAW WEDGE TYPE THROUGH HOLE POWER CHUCK(WITH ADAPTOR)

1.超大貫通孔徑：
油壓夾頭中，具最大之貫穿孔徑。
2.尺寸規格提高20%：
比一般夾頭，具高約20%之轉速，夾持力及貫通孔徑尺寸。
3.O – 200A型夾頭系依ASA B5.9A型主軸標準而設計。
4.O – 200A型夾頭采用高級合金剛材質，所有滑動面均經表面硬化及研磨處理，以提高回轉精度及耐久性。

1.More large bore:
Having the largest bore in wede type power operated chucks.
2.20% large bore:
Approximately 20% higher speed,higher gripping force and larger bore compared with usual chucks.
3.Model N–200A chucks are assembled with adaptor for ASA B5.9 type A spindles.
4.Model N–200A chucks are manufactured form high grade alloy steel,All sliding surfaces are hardened and ground for accurate actual running and long service repeatability.



Fig1

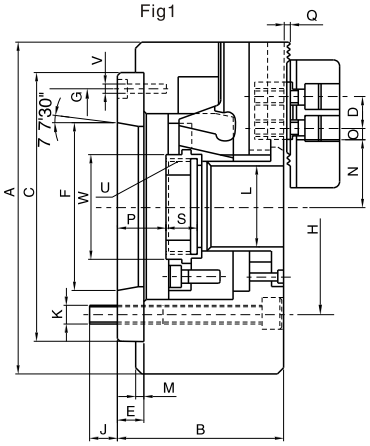

Fig2

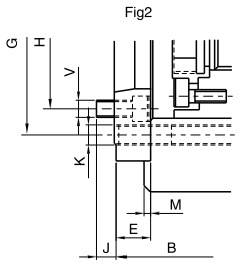

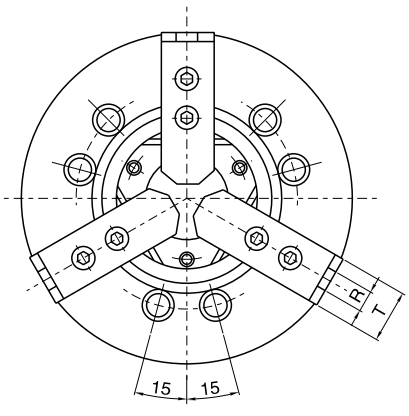

規格 SPECIFICATIONS:

型式 Model / 尺寸 Dim	O–205A4	O–206A5	O–208A5	O–208A6	O–210A6	O–210A8	O–212A8	O–215A8	O–215A11	O–218A8	O–218A11
通孔徑 Tthrough–Hole(mm)	Φ33	Φ45	Φ52	Φ52	Φ75	Φ75	Φ91	Φ117.5	Φ117.5	Φ117.5	Φ117.5
柱塞行程 Plunger Atroke(mm)	10	12	16	16	19	19	23	23	23	23	23
爪行程（直徑） Jaw Stroke(mm)	5.4	5.5	7.4	7.4	8.8	8.8	10.6	10.6	10.6	10.6	10.6
最大拉杆推力 Max.Draw Bar Pull Force(kgf)	1700	2200	3500	3500	4300	4300	5600	7240	7240	7240	7240
最大夾持力 Max.Gripping Force(kgf)	3600	5700	8900	8900	11300	11300	14680	18355	18355	18355	18355
最大使用油壓力 Max.OperatingPressure(kgf/cm²)	29.6	28.5	26.5	26.5	27.5	27.5	27.5	23.5	23.5	23.5	23.5
最大速度 Max.Speed(r.p.m)	7000	6000	4900	4900	4200	4200	3400	2500	2500	2000	2000
重量 Weight(kg)	7.8	14.7	25.8	25	41	38	59.5	125	118	178	171
適合油壓缸 Matching Cylinder	M1036	M1246	M1552	M1552	M1875	M1875	M2091	M2511	M2511	M2511	M2511
適合生爪 Matching Soft Jaw	HC05	HC06	HC08	HC08	HC10	HC10	HC12	HC15	HC15	HC15	HC15
適合硬爪 Matching Hard Jaw	HJ05	HJ06	HJ08	HJ08	HJ10	HC10	HJ12	HJ15	HJ15	HJ15	HJ15

0–200A 三爪高速中空油压夹头（包含连接板）

3 – JAW WEDGE TYPE THROUGH HOLE POWER CHUCK(WITH ADAPTOR)

尺寸表 DIMENSIONS:

型式 Model / 尺寸 Dim	O–205A4	O–206A5	O–208A5	O–208A6	O–210A6	O–210A8	O–212A8	O–215A8	O–215A11	O–218A8	O–218A11
A	135	169	210	210	254	254	304	381	381	450	450
B	71	91	109	103	120	113	122	160	149	160	149
G	96	116	133.35	150	171.45	190	190	235	260	235	260
D	14	20	25	25	30	30	30	43	43	43	43
E	15	15	23	17	25	18	18	33	22	33	22
F	63.513	82.563	82.563	106.375	106.375	139.719	139.719	139.719	196.869	139.719	196.869
C	110	140	170	170	220	220	220	300	300	300	300
H	82.55	104.78	104.78	133.35	133.35	171.45	171.45	171.45	235	171.45	235
J	15.5	16	13	18	18	24	25	24	28	24	28
K	3xM10	6xM10	6xM12	6xM12	6xM16	6xM16	6xM16	6xM2.0	6xM20	6xM20	6xM20
L	33	45	52	52	75	75	91	117.5	117.5	117.5	117.5
M	4	5	5	5	5	5	6	6	6	6	6
N max	26.5	32	38.7	38.7	51	51	61.3	82	82	82	82
N min	23.8	29.25	35	35	46.6	46.6	56	76.7	76.7	76.7	76.7
O max	19.75	22.75	29.75	29.75	33.75	33.75	45.75	46.75	46.75	79.25	79.25
O min	7.75	9.25	14.75	14.75	14.25	14.25	15.75	13.75	13.75	13.75	13.75
P max	16	26	37.5	31.5	33.5	26.5	26	40	29	29	29
P min	6	14	21.5	15.5	14.5	7.5	3	17	6	6	6
Q	2	2	2	2	2	2	2	5	5	5	5
R	10	12	14	14	16	16	21	24	24	22	22
S	20	19	20.5	20.5	25	25	28	43	43	43	43
T	23	32	37	37	42	42	52	62	62	62	62
U max.	M40x1.5	M55x2.0	M60x2.0	M60x2.0	M85x2.0	M85x2.0	M100x2.0	M130x2.0	M130x2.0	M130x2.0	M130x2.0
V	3xM6	3xM6	6xM10	3xM6	6xM12	6xM8	6xM8	6xM16	3xM10	6xM16	3xM10
W	45	60	66	66	94	94	108	139	139	139	139
參考圖	Fig–1	Fig–1	Fig–2	Fig–1	Fig–2	Fig–1	Fig–1	Fig–2	Fig–1	Fig–2	Fig–1

0F–200 四爪中空油压夹头（不含连接板）

4 – JAW WEDGE TYPE THROUGH HOLE POWER CHUCK(WITHOUT ADAPTOR)

1.OF200型夹頭采用高級合金剛材質，所有滑動面經表面硬化及研磨處理，以提高回轉精度及耐久性，潤滑嘴位於基爪。
2.基爪：
1.5mm×60°鋸齒狀缺口。
安裝：
3.配合件直接安裝并符合 DIN,BS,ISO ,ASA,B5–9,A 型之軸標準。
1.All sliding surfaces are hardened and ground for accurate actual running and long service repeatability.Lubrication nipple in each master jaw.
2.Master jaw:
1.5mm×60°serrtion.
3.Mounting:
Adaptor mounting to fit with DIN,ISO,BS,ASA B5.9 type A spindles.

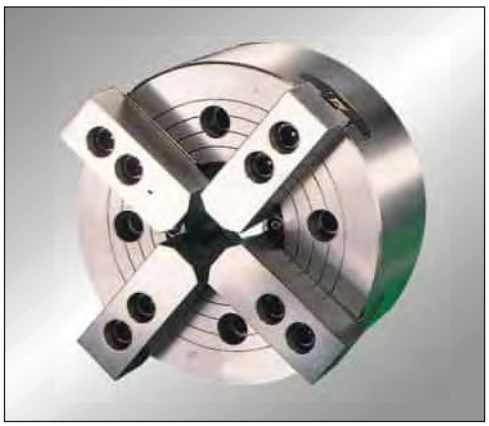

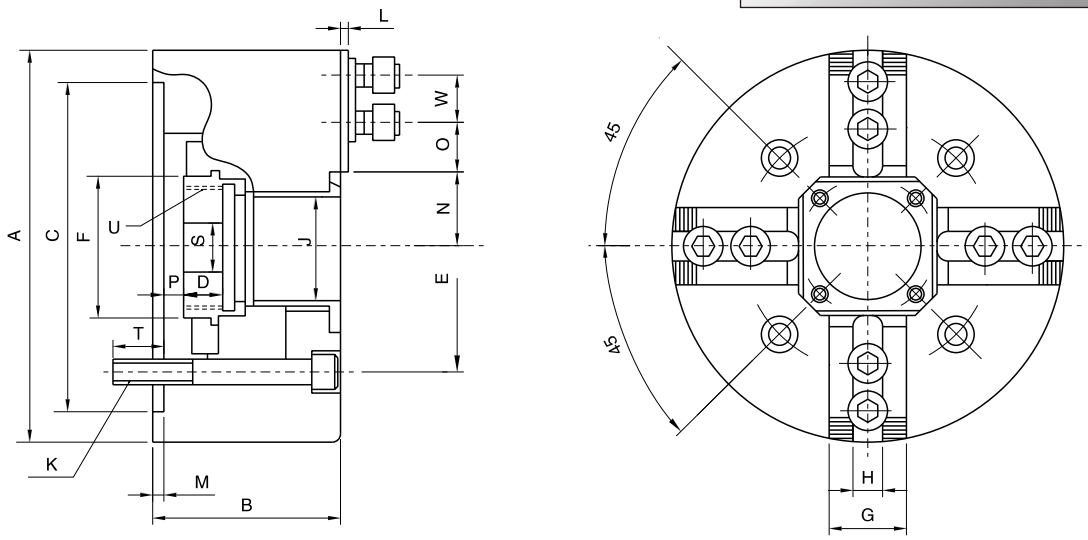

規格 SPECIFICATIONS:

型式 Model / 尺寸 Dim	OF 208	OF 210	OF 212	OF 215
通孔徑 Tthrough–Hole(mm)	Φ52	Φ75	Φ91	Φ117.5
柱塞行程 Plunger Atroke(mm)	16	19	23	23
爪行程（直徑） Jaw Stroke(mm)	7.4	8.8	10.6	10.6
最大拉杆推力 Max.Draw Bar Pull Force(kgf)	2294	2906	3739	6828
最大夾持力 Max.Gripping Force(kgf)	5716	7546	9789	12236
最大使用油壓力 Max.OperatingPressure(kgf/cm²)	17.3	18.4	18.4	15.3
最大速度 Max.Speed(r.p.m)	4900	4200	3300	2500
重量 Weight(kg)	24	36	58.5	114
適合油壓缸 Matching Cylinder	M1552	M1875	M2091	M2511

尺寸表 DIMENSIONS:

型式 Model / 尺寸 Dim	OF 208	OF 210	OF 212	OF 215
A	210	254	304	381
B	91	100	110	133
C(H6)	170	220	220	300
S	30	45	50	60
J	52	75	91	117.5
M	5	5	6	6
H	14	16	21	24
G	37	42	52	62
E	133.35	171.45	171.45	235
K	4–M12	4–M16	4–M16	4–M20
T	20	22	23	30
W	25	30	30	43
N max	38.7	51	61.3	82

型式 Model / 尺寸 Dim	OF 208	OF 210	OF 212	OF 215
N min	35	46.6	56	76.7
O max	29.75	33.75	45.75	46.75
O min	14.75	14.25	15.75	13.75
P max	14.5	8.5	8	7
P min	1.5	–10.5	–15	–16
D	23.5	25	28	43
L	2	2	2	5
U max.	M60x2	M85x2	M100x2	M130x2
F	66	94	108	139

0F–200A 四爪中空油压夹头(包含连接板)

4 – JAW WEDGE TYPE THROUGH HOLE POWER CHUCK(WITH ADAPTOR)

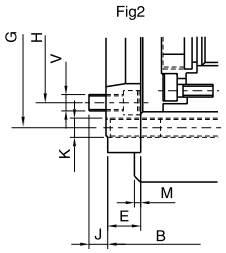

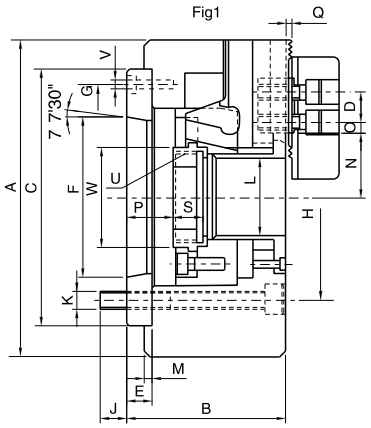

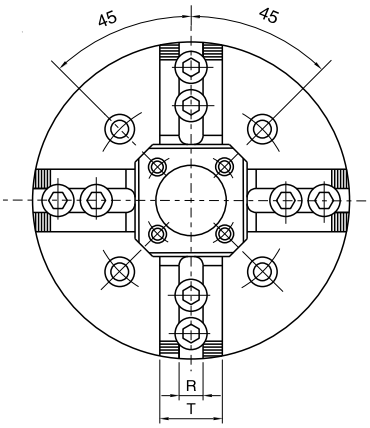

尺寸表 DIMENSIONS:

型式 Model / 尺寸 Dim	OF208A5	OF208A6	OF210A6	OF210A8	OF212A8	OF215A8	OF215A11
A	210	210	254	254	304	381	381
B	109	103	120	113	122	160	163
G	133.35	150	171.45	190	190	235	260
D	25	25	30	30	30	43	43
E	23	17	25	18	18	33	22
F	82.563	106.375	106.375	139.719	139.719	139.719	196.869
C	170	170	220	220	220	300	300
H	104.78	133.35	133.35	171.45	171.45	171.45	235
J	13	18	18	24	25	24	28
K	4xM12	4xM12	4xM16	4xM16	4xM16	4xM20	4xM20
L	52	52	75	75	91	117.5	117.5
M	5	5	5	5	6	6	6
N max	38.7	38.7	51	51	61.3	82	82
N min	35	35	46.6	46.6	56	76.7	76.7
O max	29.75	29.75	33.75	33.75	45.75	46.75	46.75
O min	14.75	14.75	14.25	14.25	15.75	13.75	13.75
P max	37.5	31.5	33.5	26.5	26	40	29
P min	22.5	15.5	14.5	7.5	3	17	6
Q	2	2	2	2	2	5	5
R	14	14	16	16	21	24	24
S	20.5	20.5	25	25	28	43	43
T	37	37	42	42	52	62	62
U max.	M60x2.0	M60x2.0	M85x2.0	M85x2.0	M100x2.0	M130x2.0	M130x2.0
V	4xM6	4xM6	6xM12	4xM8	4xM8	4xM10	4xM10
W	66	66	94	94	108	139	139
參考圖	Fig–2	Fig–1	Fig–2	Fig–1	Fig–1	Fig–2	Fig–1

200 三爪中实油压夹头（不含连接板）

3－JAW WEDGE TYPE NON THROUGH HOLE POWER CHUCK(WITHOUT ADAPTOR)



1.高性能：
與 O 系列夾頭，同具一致之高性能。
2.夾頭設定螺絲：
公制或英制圓頭螺絲以締結夾頭與主軸。
3.可選擇性之主軸配合件：
主軸配合件可采用ASA或DIN以搭配機器主軸。
1.High periormance:
Similar high performance to N serles.
2.Chuck mounting screws:
Metric or UNC socket head cap screws are supplied for bolting the chuck to the spindle.
3.Alternative spindle adaptors:
ASA or DIN adaptors can be supplied to fit machine spindle.

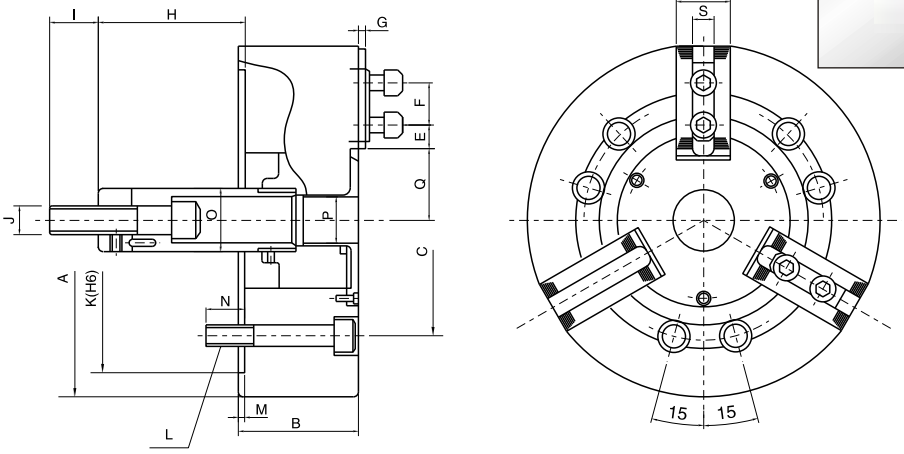

規格 SPECIFICATIONS:

型式 Model / 尺寸 Dim		206	208	210	212	215	218
爪行程（直徑）Jaw Stroke(mm)		9.2	9.7	8.8	10.5	16	16
柱塞行程 Plunger Atroke(mm)		20	21	25	30	35	35
夾持範圍 Gripping Range	最大 Max.	165	210	254	304	381	450
	最小 Min.	18	12	16	18	68	130
最大推力 Max.Pull Force(kgf)		1835	2549	2957	4181	8362	8362
最大夾持力 Max.Gripping Force(kgf)		5253	7648	11013	15907	25391	25391
最大使用油壓力 Max.OperatingPressure(kgf/cm²)		26.5	25.5	28.6	27.5	32.6	32.6
最大速度 Max.Speed(r.p.m)		5200	4500	4000	3300	3000	2700
重量 Weight(kg)		12	23	34.5	59.5	101	134
慣性矩 Moment of Inertial(kgf–m²)		0.045	0.137	0.3	0.725	1.8	2.4
適合油壓缸 Matching Cylinder		MS105 MH100	MS125 MH125	MS125 MH125	MS150 MH150	MS200 MH200	MS200 MH200
適合生爪 Matching Soft Jaw		HJ06	HJ08	HJ10	HJ12–1	HJ15–1	HJ15–1
適合硬爪 Matching Hard Jaw		HC06	HC08	HC10	HC12–1	HC15–1	HC15–1

尺寸表 DIMENSIONS:

型式 Model / 尺寸 Dim	206	208	210	212	215	218
A	165	210	254	304	381	450
B	74	85	89	106	114	114
K(H6)	140	170	220	220	300	300
M	5	5	5	6	6	6
C	104.78	133.35	171.45	171.45	235	235
P	21	25	34	34	–	–
L	6–M10	6–M12	6–M16	6–M16	6–M20	6–M20
N	14	20	18	22	29	29
F	20	25	30	30	43	43
Qmax	38.7	46.75	51.1	61	77.5	108
Qmin	34.1	41.9	46.7	55.75	69.5	100
Emax	15.25	22.25	30.75	48.75	50.25	50.25
Emin	9.25	11.75	11.25	12.75	23.25	23.23
Hmax	104.6	132	158	163	104	92
Hmin	84.6	111	133	133	69	57
R	31	35	40	50	50	50
S	12	14	16	18	25.5	25.5
I	36	36	36	36	55	55
J	M16x2.0	M20x2.5	M20x2.5	M20x2.5	M30x3.5	M30x3.5
G	4	5	5	5	2	2
O	34	38	45	50	60	60

T200 二爪中实油压夹头（不含连接板）

2－JAW WEDGE TYPE NON THROUGH HOLE POWER CHUCK(WITHOUT ADAPTOR)



1.適合特殊應用例：
應用於三爪夾頭無法夾持之特殊形狀工件，如長方形、棒形或凸緣。
2.可與 200 或 200A 系列互換。
3.基本尺寸規格同 200 型夾頭。
4.高性能同200 型夾頭。

1.Suitable for special applications:
Used to hold special shape work pieces such as square bar or flanges which is not possible with 3 jaw chucks.
2.Interchangable with V or VA series.
3.Basic dimensions are the same as V type.
4.High performance as V type.

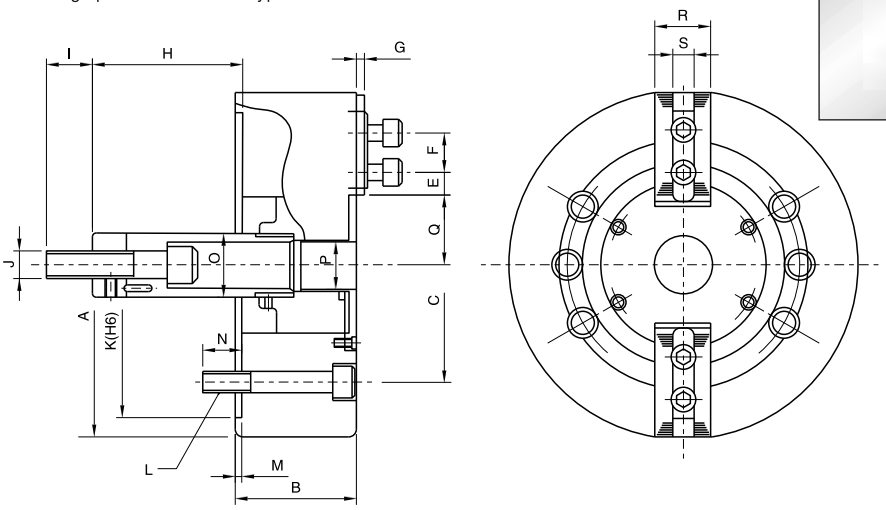

規格 SPECIFICATIONS:

型式 Model / 尺寸 Dim		T206	T208	T210	T212	T215
爪行程（直徑）Jaw Stroke(mm)		9.2	9.7	8.8	10.5	16
柱塞行程 Plunger Atroke(mm)		20	21	25	30	35
夾持範圍 Gripping Range	最大 Max.	165	210	254	304	381
	最小 Min.	18	12	16	18	68
最大推力 Max.Pull Force(kgf)		1224	1683	1988	2804	5557
最大夾持力 Max.Gripping Force(kgf)		3550	5099	7342	10605	16927
最大使用油壓力 Max.OperatingPressure(kgf/cm²)		17.3	16.9	19.4	18.4	21.7
最大速度 Max.Speed(r.p.m)		5200	4500	4000	3300	3000
重量 Weight(kg)		12	22	33.5	58	100.6
慣性矩 Moment of Inertial(kgf–m²)		0.04	0.13	0.29	0.7	1.7
適合油壓缸 Matching Cylinder		MS105 MH100	MS125 MH125	MS125 MH125	MS150 MH150	MS200 MH200
適合生爪 Matching Soft Jaw		HJ06	HJ08	HJ10	HJ12–1	HJ15–1
適合硬爪 Matching Hard Jaw		HC06	HC08	HC10	HC12–1	HC15–1

尺寸表 DIMENSIONS:

型式 Model / 尺寸 Dim	T206	T208	T210	T212	T215
A	165	210	254	304	381
B	74	85	89	106	114
K(H6)	140	170	220	220	300
M	5	5	5	6	6
C	104.78	133.35	171.45	171.45	235
P	21	25	34	34	–
L	6–M10	6–M12	6–M16	6–M16	6–M20
N	14	20	18	22	29
F	20	25	30	30	43
Qmax	38.7	46.75	51.1	61	77.5
Qmin	34.1	41.9	46.7	55.75	69.5
Emax	15.25	22.25	30.75	48.75	50.25
Emin	9.25	11.75	11.25	12.75	23.25
Hmax	106.5	132	163	168	104
Hmin	86.5	111	138	138	69
R	31	35	40	50	50
S	12	14	16	18	25.5
I	36	36	36	36	55
J	M16x2.0	M20x2.5	M20x2.5	M20x2.5	M30x3.5
G	4	5	5	5	2
O	34	38	45	50	60

200A 三爪中实油压夹头（包含连接板）

3－JAW WEDGE TYPE NON THROUGH HOLE POWER CHUCK(WITHOUT ADAPTOR)



1.直接安裝：
直接將 200A 系列夾頭安裝於符合 ASA 及 JIS 標準的短錐主軸。
2.高性能：
與 200 系列夾頭，同具一致之高性能。
3.夾頭設定螺絲：
公制或英制圓頭螺絲以締結夾頭與主軸。
4.可選擇性之主軸配合件：
主軸配合件可采用 ASA 或 DIN 以搭配機器主軸。
1.Direct mounting:
Direct mount VA series chucks onto short taper spindle of ASA and JIS standards.
2.High performance:
Similar high performance to V series.
3.Chuck mounting screws:
Metric or UNC socket head cap screws are supplied for bolting the chuck to the spindle.
4.Alternative spindle adaptors:
ASA or DIN addptors can be supplied to fit machine spindle.

Fig2

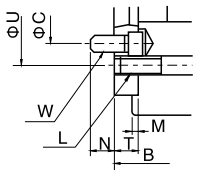

Fig1

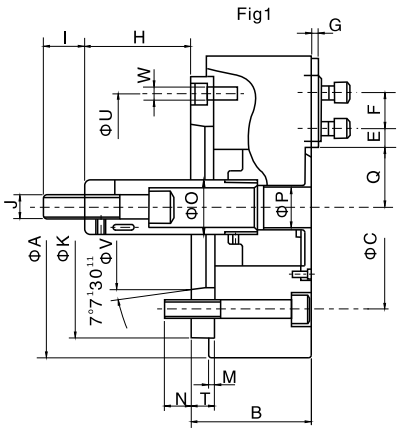

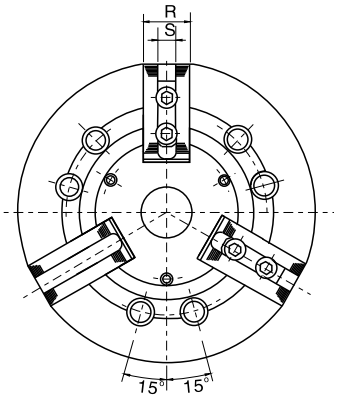

規格 SPECIFICATIONS:

型式 Model / 尺寸 Dim	206A5	208A6	210A6	210A8	212A8	215A8	215A11	218A11
爪行程（直徑）Jaw Stroke(mm)	9.2	9.7	8.8	8.8	10.5	16	16	16
柱塞行程 Plunger Atroke(mm)	20	21	25	25	30	35	35	35
最大推力 Max.Pull Force(kgf)	1835	2549	2957	2957	4181	8362	8362	8362
最大夾持力 Max.Gripping Force(kgf)	5253	7648	110013	110013	15907	25391	25391	25391
最大使用油壓力 Max.OperatingPressure(kgf/cm²)	25.5	25.5	28.6	28.6	27.5	32.6	32.6	32.6
最大速度 Max.Speed(r.p.m)	5000	4500	4000	4000	3300	3000	3000	2700
重量 Weight(kg)	13.2	25	40.5	37.5	62.5	115	108	141
慣性矩 Moment of Inertial(kgf–m²)	0.045	0.137	0.3	0.3	0.725	1.8	1.8	2.5
適合油壓缸 Matching Cylinder	MS105 MH100	MS125 MH125	MS125 MH125	MS125 MH125	MS150 MH150	MS150 MH150	MS200 MH200	MS200 MH200
適合生爪 Matching Soft Jaw	HJ06	HJ08	HJ10	HJ10	HJ12–1	HJ15–1	HJ15–1	HJ15–1
適合硬爪 Matching Hard Jaw	HC06	HC08	HC10	HC10	HC12–1	HC15–1	HC15–1	HC15–1

200A 三爪中实油压夹头（包含连接板）

3－JAW WEDGE TYPE NON THROUGH HOLE POWER CHUCK(WITHOUT ADAPTOR)

尺寸表 DIMENSIONS:

型式 Model / 尺寸 Dim	206A5	208A5	208A6	210A6	210A8	212A8	215A8	215A11
A	165	210	210	254	254	304	381	381
B	84	103	97	109	102	118	141	130
C	104.78	104.78	133.35	133.35	171.45	171.45	171.45	235
F	20	25	25	30	30	30	43	43
K	140	170	170	220	220	220	300	300
L	6-M10	6-M12	6-M12	6-M16	6-M16	6-M16	6-M20	6-M20
M	5	5	5	5	5	6	6	6
N	14	13	18	18	25	25	24	32
P	21	21	25	34	34	34	–	–
T	15	23	17	25	18	18	33	22
V	82.563	82.563	106.375	106.375	139.719	139.719	139.719	196.869
U	116	133.35	150	171.45	190	190	235	260
E max	15.25	22.25	22.25	30.75	30.75	48.75	50.25	50.25
E min	9.25	11.75	11.75	11.25	11.25	12.75	23.25	23.25
G	4	5	5	5	5	5	2	2
H min	89.6	109	115	133	140	145	71	82
H max	69.6	88	94	108	115	115	36	47
I	36	36	36	36	36	36	55	55
J	M16x2.0	M20x2.5	M20x2.5	M20x2.5	M20x2.5	M20x2.5	M30x3.5	M30x3.5
O	34	38	38	45	45	50	60	60
Q max.	38.7	46.75	46.3	51.1	51.1	61	77.5	77.5
Q min.	34.1	41.9	41.9	46.7	46.7	55.75	69.5	69.5
R	31	35	35	40	40	50	50	50
S	12	14	14	16	16	18	25.5	25.5
W	3-M6	6-M10	3-M6	6-M12	6-M8	6-M8	6-M16	3-M10
參考圖	Fig-1	Fig-2	Fig-1	Fig-2	Fig-1	Fig-1	Fig-2	Fig-1

ER延长杆（车床用）

ER EXTENSION (A TYPE · FOR LATHE)



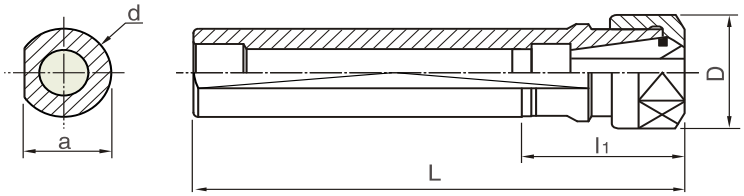

型 號 Cat. No	L	l1	a	D	d
SL20-ER16A-100	100	29	19	28	20
SL20-ER20A-100	100	33	19	34	20
SL25-ER20A-100	100	33	24	34	25
SL32-ER32UM-138	138	38	31	50	32
SL40-ER32UM-108	108	38	38	50	40

扳手須另行購置 **The spanner must purchase alone**



硬爪 HARD JAWS FOR HYDRAULIC CHUCKS

单位/UNIT：mm

尺寸图 DIMENSIONS

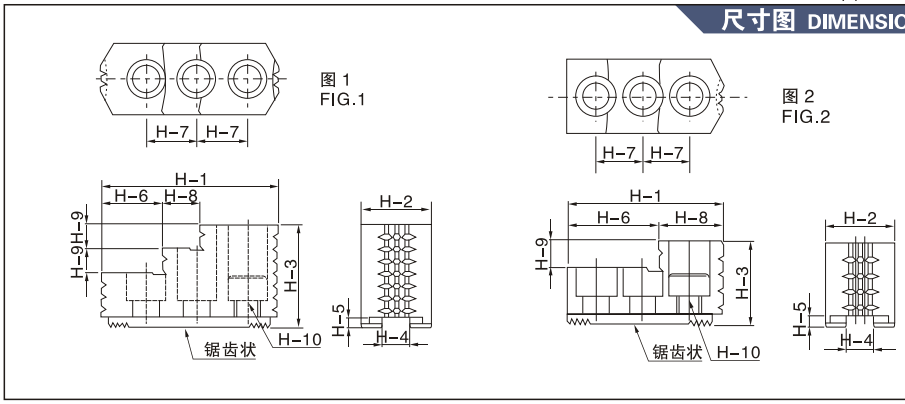

规格表 SPECIFICATIONS

规格/型式 SPEC./MODEL	H-1	H-2	H-3	H-4	H-5	H-6	H-7	H-8	H-9	H-10	锯齿状节距 Sprration Pitch	适合卡盘 Matching chuck	参考图 Reference Drawing
HJ05	53	23	28	10	4	30.5	14	22.5	10	M8	1.5×60°	N-205	图-2 Fig.2
HJ06	67	31	36	12	5	39	20	28	12	M10	1.5×60°	N-206 V-206	图-2 Fig2
HJ08	86	35	51	14	5	31	25	18	12	M12	1.5×60°	N-208 V-208	图-1 Fig1
HJ10	100	40	54	16	5	43	30	17	14	M12	1.5×60°	N-210 V-210	图-1 Fig1
HJ12	113	50	52	21(18)	5	69.5	30	43.5	20	M16	1.5×60°	N-212 (V-212)	图-2 Fig2
HJ15	143	62	86	22(25.5)	8(5)	55	43	38	20	M20	1.5×60°	N-215 (V-215)	图-1 Fig1



生爪 SOFT JAWS FOR HYDRAULIC CHUCKS

单位/UNIT：mm

尺寸图 DIMENSIONS

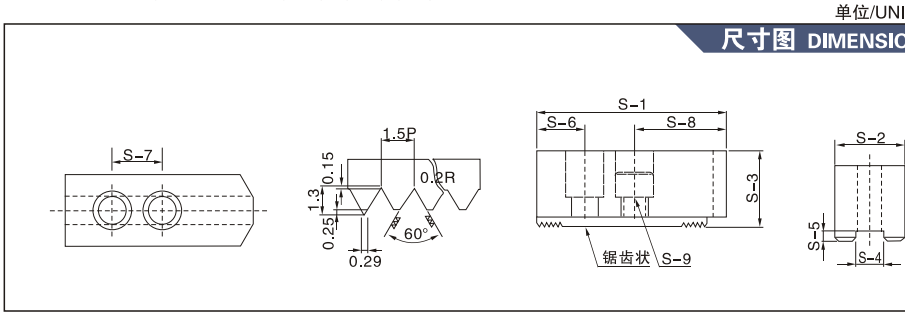

规格表 SPECIFICATIONS

规格/型式 SPEC./MODEL	S-1	S-2	S-3	S-4	S-5	S-6	S-7	S-8	S-9	S-10	锯齿状节距 Sprration Pitch	适合卡盘 Matching chuck
SJ05	62	25	30	10	4	14	14	29	29	M8	1.5×60°	N-205
SJ06	73	31	36	12	5	15	20	38	38	M10	1.5×60°	N-206 V-206
SJ08	95	35	38	14	5	24	25	46	46	M12	1.5×60°	N-208 V-208
SJ10	110	40	42	16	5	30	30	50	50	M12	1.5×60°	N-210 V-210
SJ12	130	50	50	21(18)	5(6)	39	30	60	60	M16	1.5×60°	N-212 (V-212)
SJ15	165	62	62	22(25.5)	8(5)	37	43	85	85	M20	1.5×60°	N-215 (V-215)

特殊生爪 SPECIAL SOFT FOR HYDRAULIC CHUCKS

加长 / 加高 / 加宽



拉料器 BAR PULLERS FOR CNC LATHES







拉料器说明

拉料器一般适用於CNC车床及数控专用机刀塔上，可取代自动送料机，其拉料长度精确。

Bar puller of cnc lathe

Bar puller is used easy on CNC lathe which it is installed on the turret directly to directly to pull a bar and control a length by machine itself. Bar puller is mechanical design for easy maintenance. Low price & save a space than bar feeder.

单位/UNIT：mm

N0.	规格/型式 SPEC./MODEL	D	夹持直径 Clamping mnge
ACL5–01	P20	Φ20	Φ2 – Φ50
ACL5–02	P25	Φ25	Φ2 – Φ50
ACL5–03	P32	Φ32	Φ4 – Φ50

如果你想订购合金夹头款，请在订购型号前面加H字母。 If you want to order the alloy collet type, please add the letter "H" before the order model.

成型圈
FORMING CIRCLE



单位/UNIT：mm

尺寸图 DIMENSIONS

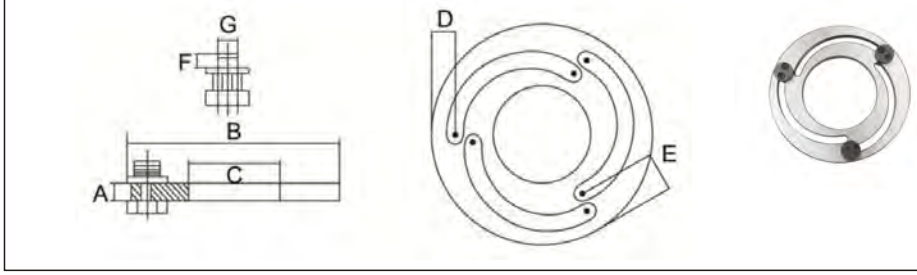

规格表 SPECIFICATIONS

N0.	规格/型式 SPEC./MODEL	A	B	C	D	E	F	G
ACL7–01	H–4	12	114	34	12	28	9	13
ACL7–02	H–5	12	140	60	12	28	9	13
ACL7–03	H–6	12	168	80	16.5	32	9	1
ACL7–04	H–8	12	218	115	18.5	36	9	1
ACL7–05	H–10	12	258	150	18.5	40	9	1
ACL7–06	H–12	15	326	188	22.5	50	9	2
ACL7–07	H–15	20	380	230	31	52	16	1

连接盘
CONNECTING PLATE



单位/UNIT：mm

尺寸图 DIMENSIONS

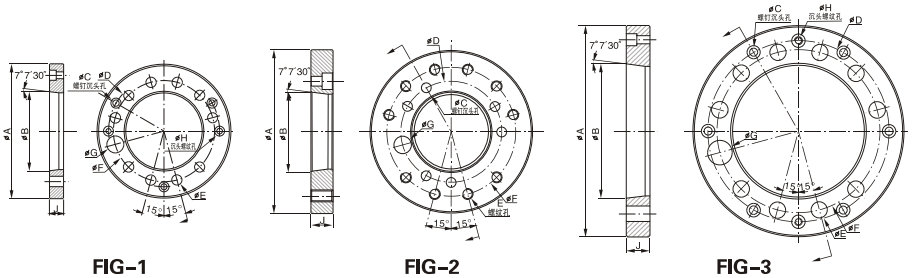

规格表 SPECIFICATIONS

N0.	规格/型式 SPEC./MODEL	A	B	C	D	E	F	G	H	J	参考图 Reference Drawing
ACL8–01	A5–206	140	82.563	3–M6	116	10–M10	104.78	18	2–M6	15	fig–1
ACL8–02	A5–208	170	82.536	6–M10	133.35	10–M12	104.78	18	–	23	fig–2
ACL8–03	A6–208	170	106.375	3–M6	150	10–M12	133.35	20	2–M6	17	fig–1
ACL8–04	A6–210	220	106.375	6–M12	171.45	10–M16	133.35	20	–	25	fig–2
ACL8–05	A8–210	220	139.719	6–M8	190	10–M16	171.45	26	2–M8	18	fig–1
ACL8–06	A8–212	220	139.719	6–M8	190	10–M16	171.45	26	2–M8	18	fig–3

美式快换刀架 QUICK CHANGE TOOL POSTS

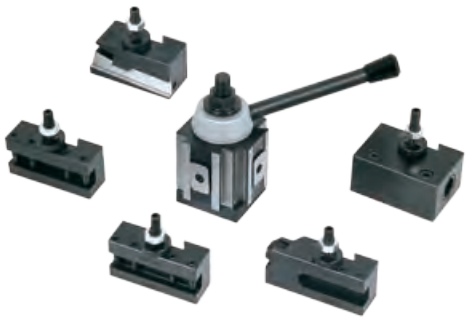

快换刀架是普通车床的主要附件，由一个刀架和若干刀夹组成，根据加工工件的需要，选择相应刀夹，可进行车外圆，车端面、切槽、切断、滚花、钻铰孔、镗孔等加工。它实现了机外装刀，刀夹通过燕尾槽安装在刀架上，具有换刀迅速，定位精度高，刚性强等特点，是一种替代传统四方刀架，实现快速车削的理想产品

The quick change tool post is a main accessory of the machine tool,it is consist of tool post and many kinds of tool holders,according to the processing requirements of the workpieces,corresponding tool holders are selected to finish cylindrical facing,end facing,cutting,drilling,reaming, boring as well as other processing.It realizes to mount tool outside the machine tool,it has exchange tool quickly,high precision, rigidity strong etc.It is satisfactory accessories in place of square turrets.

活塞式快换刀架套装： 1个刀架、5个刀夹 Piston Type Tool Post Sets：1 Tool Post, 5 Tool-holders

型号 Cat.No	套装包括 EACH SET INCLUDES	重量N.W/kg
250-100-00	250-100、250-101、250-102、250-104、250-107、250-110	5.00
250-200-00	250-200、250-201、250-202、250-204、250-207、250-210	7.85
250-300-00	250-300、250-301、250-302、250-304、250-307、250-310	11.33
250-400-00	250-400、250-401、250-402、250-404、250-407、250-410	20.76

楔式快换刀架套装： 1个刀架、5个刀夹 Wedge type Tool Post Sets：1 Tool Post, 5 Tool-holders

型号 Cat.No	套装包括 EACH SET INCLUDES	重量N.W/kg
250-111-00	250-111、250-101、250-102、250-104、250-107、250-110	5.00
250-222-00	250-222、250-201、250-202、250-204、250-207、250-210	7.85
250-333-00	250-333、250-301、250-302、250-304、250-307、250-310	11.33
250-444-00	250-444、250-401、250-402、250-404、250-407、250-410	20.76

活塞式夹紧刀架 PISTON TYPE LOCKING TOOL POST



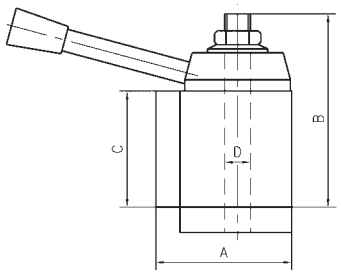

型号 Cat.No	A(in)	B(in)	C(in)	D(in)	回转直径 Swing dia(in)	重量 Wt(kg)
250-100	2-1/2	3-7/8	2-1/4	9/16	12	2.23
250-200	3	4-5/8	2-3/4	5/8	10-15	4.00
250-300	3-3/8	5-1/8	3	3/4	13-18	5.72
250-400	4	6-1/4	3-5/8	7/8	14-20	10.00

楔式快换刀架 GIB TYPE TOOL POST



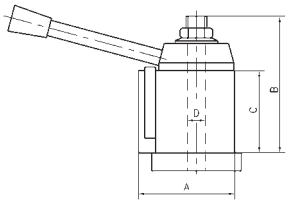

型号 Cat.No	A(in)	B(in)	C(in)	D(in)	回转直径 Swing dia(in)	重量 Wt(kg)
250–111	2–1/2	3–7/8	2–1/4	9/16	12	2.23
250–222	3	4–5/8	2–3/4	5/8	10–15	4.00
250–333	3–1/2	5–1/8	3	3/4	13–18	5.72
250–444	4	6–1/4	3–5/8	7/8	14–20	10.01

车削刀夹 TURNING AND FACING HOLDER



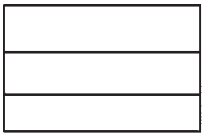

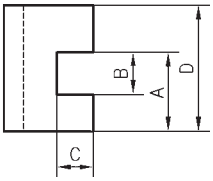

型号 Cat.No	A(in)	B(in)	C(in)	D(in)	夹持刀柄范围 Tool bit range(in)	重量 Wt(kg)
250–101	1	1/2	29/64	1–1/2	3/16–1/2	0.40
250–201	1–1/8	5/8	1/2	1–3/4	1/4–5/8	0.70
250–301	1–7/16	3/4	5/8	2–1/8	1/2–3/4	1.11
250–401	1–23/32	1	3/4	2–1/2	1/2–1	1.75

车镗削用刀夹 TURNING BORING AND FACING HOLDER



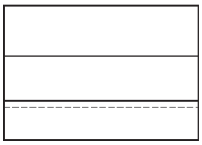

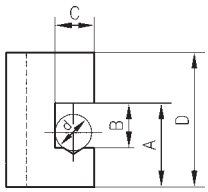

型号 Cat.No	A(in)	B(in)	C(in)	D(in)	夹持刀柄范围 Tool bit range(in)	重量 Wt(kg)
250–102	1	1/2	29/64	1–1/2	3/16–1/2	0.40
250–202	1–1/8	5/8	1/2	1–3/4	1/4–5/8	0.70
250–302	1–7/16	3/4	5/8	2–1/8	1/2–3/4	1.11
250–402	1–23/32	1	3/4	2–1/2	1/2–1	1.75

V型槽用来夹持圆柄镗杆及刀具，也可装方体车刀，进行端面、外圆、镗孔等切削加工

V groove hold round shank boring bars and tools as well as square tool bits to machine end face,external,cutting,boring etc.

强力镗削刀夹 HEAVY DUTY BORING BAR HOLDER



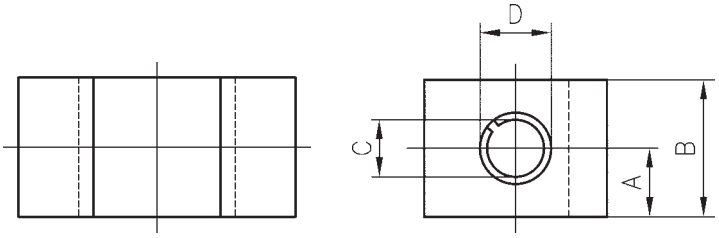

型号 Cat.No	A(in)	B(in)	C(in)	D(in)	重量 Wt(kg)
250–104	3/4	1–1/2	5/8	3/4	0.90
250–204	7/8	1–3/4	3/4	1	1.52
250–304	1	2	3/4	1	2.16
250–404	1–1/4	2–1/2	1	1–1/4	3.47
250–141	7/8	1–3/4	3/4	1	1.35
250–241	1	2	1	1–1/4	2.12
250–341	1–1/8	2–1/4	1	1–1/4	3.05
250–441	1–3/8	2–3/4	1–1/4	1–1/2	4.35

采用直柄钻头和圆柄刀具，可进行钻孔、扩孔、镗孔等切削加工；通过胀套，可调整镗杆的直径；刚性好，切削时不发生颤动。

Use straight shank drilling and reaming, boring etc.Equipped with a split bushing to accommadate a boring bar of small diameter.It grips with extreme rigidity.Cuts smoothly without chatter.

切断刀夹 UNIVERSAL PARTING BLADE TOOL HOLDER



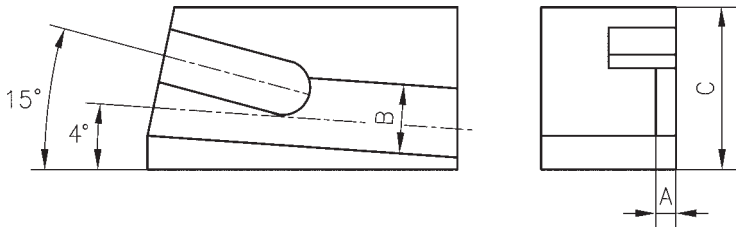

型号 Cat.No	A(in)	B(in)	C(in)	刀片高度 Blade height(in)	重量 Wt(kg)
250–107	3/16	1/2	1–1/2	1/2	0.53
250–207	3/16	11/16	1–3/4	11/16	0.90
250–307	3/16	3/4	2	3/4	1.20
250–407	1/4	7/8	2–1/2	7/8	1.82

装方体车刀进行切槽，切断等加工

Use square tool to make slot cut off etc.

钻削莫氏锥孔刀夹 MORSE TAPER HOLDER FOR DRILLING



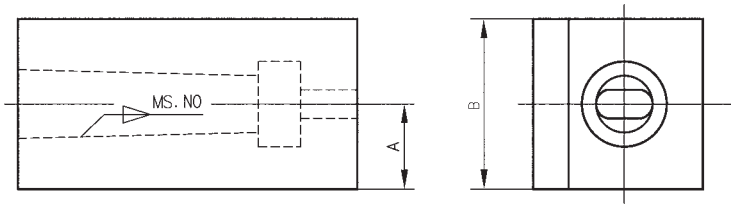

型号 Cat.No	A(in)	B(in)	莫氏锥号 MS.NO	重量 Wt(kg)
250–105	3/4	1–1/2	MS2	0.90
250–205	7/8	1–3/4	MS2	1.40
250–305	1	2	MS3	2.30
250–405	1–1/4	2–1/2	MS3	3.00
250–153	7/8	1–1/2	MS3	1.00
250–253	1	1–3/4	MS3	1.43
250–354	1–1/16	2–1/8	MS4	2.45
250–454	1–1/4	2–1/2	MS4	3.30

该刀夹可代替尾座夹持锥度钻头进行钻削加工

Drills with carriage by using power feed instead of tail stock easily centered or morse taper drills

滚花车削用刀夹 KNURNING & FACING HOLDER



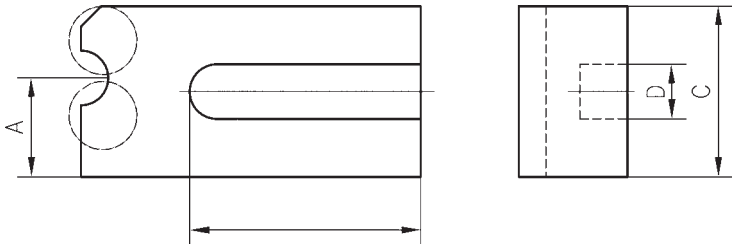

型号 Cat.No	A(in)	B(in)	C(in)	夹持范围 Clamping range(in)	夹持刀柄范围 Tool bit range(in)	重量 Wt(kg)
250–110	7/8	2–1/2	1–9/16	3/16–1/2	3/4×3/8×1/4	0.48
250–210	1	2–5/8	1–3/4	1/4–5/8		0.85
250–310	1–3/16	3–1/8	2	1/2–3/4		1.15
250–410	1–7/16	3–3/4	2–1/2	1/2–1		1.95

此刀夹可用来滚花，如装上方体车刀，可进行端面，镗孔等切削加工

It may be used for knuring,if square tool is used,it may process end face,extered cutting,boring etc.

欧式齿式快换刀架及刀夹

40—POSITION QUICK CHANGE TOOL POST AND TOOL HOLDERS

1. Cam—lock handle rigidity locks & quickly releases tool holder
2. Correct height of cutting edage is easily & accurately adjusted by special set screws
3. Tools can be reground without removal form tool holder setting remains unaltins unaltered
4. 40 different angles(every 9°)are conveniently selected from position dials with marker
5. Holders are interchangeable with most other brand 40 position tool post

1. 凸轮锁紧手柄能牢固锁紧和快速松开刀夹，操作简便
2. 专用螺钉调整切削刃高度
3. 刀具可在不移动刀夹及调整套装装置的前提下重复磨削
4. 40个不同角度（每9° 一工位）可从刻线上方便读出
5. 可与其它品牌的40工位快换刀架及刀夹互换

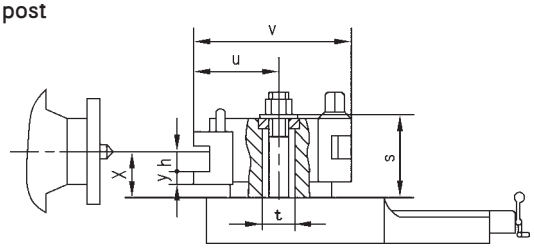

mm

型号 Cat.No	回转直径 Lathe Swing	Xmin	Xmax	y	h	v	s	u	t
Aa	120—220	18	26	6	12	62.5	37	33.75	13
A	150—300	25.5	36.5	9.5	16	104	55	52.4	20
		29.5	40.5		20				
E	200—400	29	40	9	20	132	68	65.3	20
		34	43		25				
B	300—500	38	58	13	25	152	77	75	32
		46	57	14	32				
C	400—700	47	88	15	32	191	107	92	40
		55	92	15	40	202		102	
		63	91	18	45	202		102	

标准5件套　5—PIECE SET



型号 Cat.No	套装包括 EACH SET INCLUDES	重量N.W/kg
Aa—00	1Pcs Aa、3Pcs AaD12X50 and 1pcs AaH12X50	1.13
A—00	1Pcs A、3Pcs AD20X90 and 1pcs AH20X90	3.60
E—00	1Pcs E、3Pcs ED20X100 and 1pcs EH30X100	7.50
B—00	1Pcs B、3Pcs BD25X120 and 1pcs BH32X130	11.80
C—00	1Pcs C、3Pcs CD32X150 and 1pcs CH40X160	23.70

车削用刀夹 TURNING AND FACING TOOL HOLDER



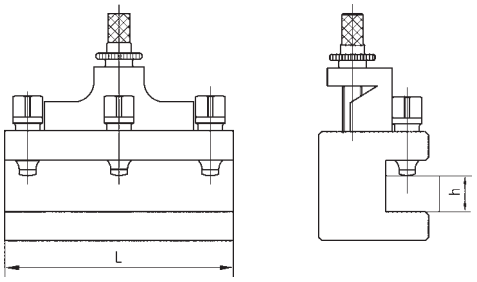

型号 Cat.No	h(mm)	L(mm)	型号 Cat.No	h(mm)	L(mm)
AaD12X50	12	50	BD25X140	25	140
AD16X75	16	75	BD32X120	32	120
AD16X90	16	90	BD32X140	32	140
AD20X75	20	75	CD32X150	32	150
AD20X90	20	90	CD32X170	32	170
ED20X100	20	100	CD40X150	40	150
ED25X100	25	100	CD40X170	40	170
BD25X120	25	120	CD45X170	45	170

车镗削用刀夹 TURNING FACING AND BORING HOLDER



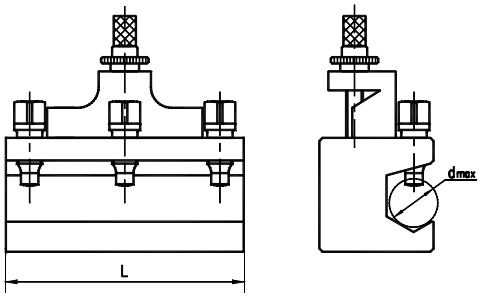

型号 Cat.No	dmax(mm)	L(mm)
AaH12X50	12	50
AH20X90	20	90
EH30X100	30	100
BH30X130	30	130
BH32X130	32	130
CH35X150	35	150
CH40X160	40	160

V 型槽用来夹持圆柄镗杆及刀具，也可装方体车刀，进行端面、外圆、镗孔等切削加工

V groove hold round shank boring bars and tools as well as square tool bits to machine end face, external, cutting, boring etc.

强力钻镗用刀夹 HEAVY DUTY DRILLING AND BORING TOOL HOLDER



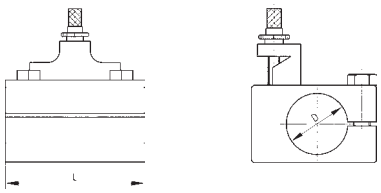

型号 Cat.No	镗刀杆D(mm) Boring Bar Dia	L(mm)	型号 Cat.No	镗刀杆D(mm) Boring Bar Dia	
AaJ15X50	15	50	BJ40X120	40	120
AJ30X80	30	80	CJ40X160	40	160
EJ30X100	30	100	CJ50X160	50	160
EJ40X100	40	100			

强力钻镗刀夹用莫氏套筒 MS BUSHINGS FOR BORING TOOL HOLDER



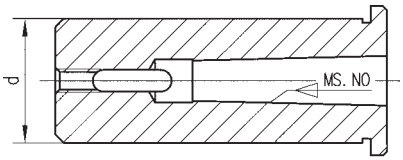

型号 Cat.No	d	MS.NO.	适用刀架型号Type of tool post
AL—1—30	30	MS1	A、E
AL—2—30	30	MS2	A、E
BL—1—40	40	MS1	B
BL—2—40	40	MS2	B
BL—3—40	40	MS3	B、C、E
BL—4—40	40	MS4	B、C、E
CL—3—50	50	MS3	C
CL—4—50	50	MS4	C
CL—5—50	50	MS5	C

切断刀夹 CUTTING OFF TOOL HOLDER



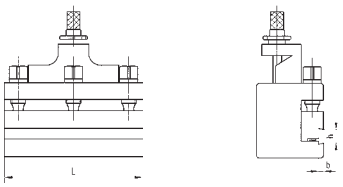

型号 Cat.No	bXh(mm)	L(mm)	型号 Cat.No	bXh(mm)	L(mm)
AT—K3X10X75	3X10	75	BT—K4X16X120	4X16	120
ET—K4X16X100	4X16	100	CT—K5X20X150	5X20	150

意式快换刀架 QUICK CHANGE TOOL POST (ITALY STYLE)

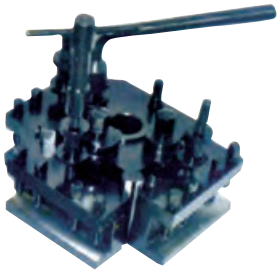

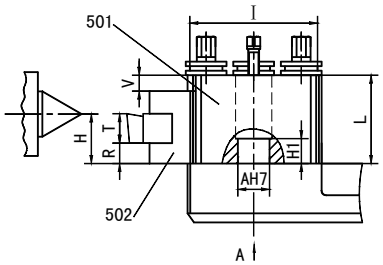

型号 Cat.No	回转直径 Lathe swing	I	AH7	H		L	R	T max	z	Φmax	Morse No.	ΦD	M	H1
				Min	Max									
M	180–250	57.7	18	24	34	45	8	16	56	14	1	7	27	18
AR–AP	250–300	64.5	18	25	41	56	9	16	63	16	1	8	30	16
A	250–350	82.0	24	32	42	60	12	20	75	18	2	10	35	20
BR–BP	300–380	91.6	28	38	53	75	13	25	90	20	3	10	40	20
B	350–500	100.0	30	47	65	85	15	32	100	24	3	12	48.2	25
C	500–650	115.3	38	51	72	94	19	32	108	26	4	14	58.2	26
D	650–1200	133	42	61	95	120	21	40	139	35	5	14	65	40

5件套装，包括1个刀架、4个刀夹

5–PIECE SETS (1 Tool post,3Tool–holders of flat section,1Tool–holder with V–seat for round tools

型号 Cat.No	套装包括 EACH SET INCLUDES	重量 N.W/kg
M	1PCS 501–M、3PCS 502–M AND 1 PCS 503–M	2.89
AR–AP	1PCS 501–AR–AP、3PCS 502–AR–AP AND 1 PCS 503–AR–AP	4.29
A	1PCS 501–A 、3PCS 502–A AND 1 PCS 503–A	8.9
BR–BP	1PCS 501–BR–BP、3PCS 502–BR–BP AND 1 PCS 503–BR–BP	12.89
B	1PCS 501–B、3PCS 502–B AND 1 PCS 503–B	17.26
C	1PCS 501–C、3PCS 502–C AND 1 PCS 503–C	22.55
D	1PCS 501–D、3PCS 502–D AND 1 PCS 503–D	44.75

QUICK CHANGE TOOL POST(意式刀架体)



型号 Cat.No	中心高 Centre Height	订单号 Order No.	中心高 Centre Height
501–M	120	501–B	230
501–AR–AP	140	501–C	280
501–A	170	501–D	350
501–BR–BP	200		

车削用刀夹 TURNNING & FACING HOLDER



型号 Cat.No	最大刀杆尺寸 Max Square and Rectangular Tools
502—M	16
502—AR—AP	16
502—A	20
502—BR—BP	25
502—B	32
502—C	32
502—D	40

车镗削用刀夹 TURNNING BORING AND FACING HOLDER



型号 Cat.No	最大夹持直径 Max Holding Dia.
503—M	14
503—AR—AP	16
503—A	18
503—BR—BP	20
503—B	24
503—C	26
503—D	35

莫氏锥孔刀夹 MORSE TAPER HOLDER FOR DRILLING



型号 Cat.No	莫氏锥孔 Morse Taper
504—M	MT1
504—AR—AP	MT1
504—A	MT2
504—BR—BP	MT3
504—B	MT3
504—C	MT4
504—D	MT5

强力钻镗用刀夹 HEAVY DRILLING AND BORING HOLDER



型号 Cat.No	最大夹持直径 Max Holding Dia.
540—M	18
540—AR—AP	20
540—A	25
540—BR—BP	32
540—B	40
540—C	50
540—D	60

切断刀夹 TOOL HOLDER FOR PARTING BLADES



型号 Cat.No	刀片 Parting blade
540—M	15X4X3
550—AR—AP	18X4X3
550—A	20X6X5
550—BR—BP	20X6X5
550—B	25X6X5
550—C	30X6X5
550—D	35X8X7

VDI 工具系统
VDI TOOLING SYSTEM



TOOLHOLDERS FOR CNC LATHES
PORTAUTENSILI PER TORNI CNC

刀架应用示意图 Sketch map of tool holder

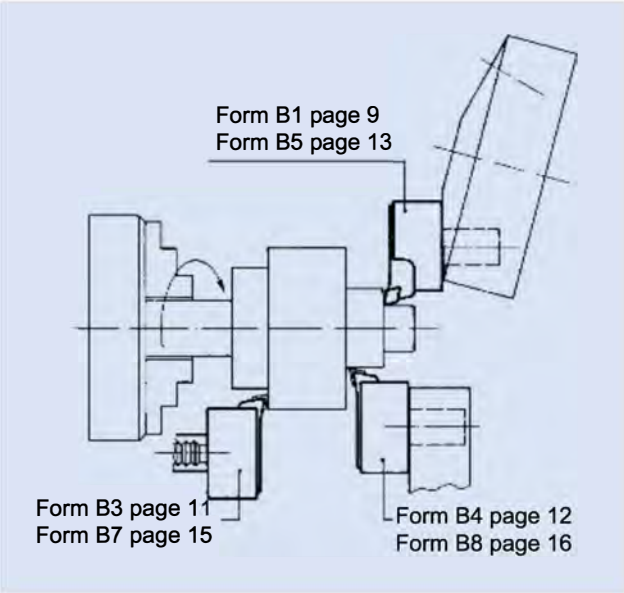

逆时针旋转径向刀架的应用

Application of radial tool holders with anti-clockwise spindle rotation

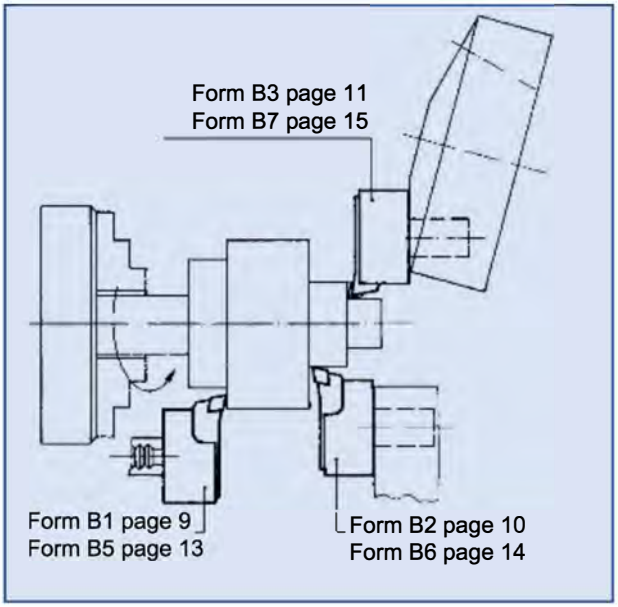

顺时针旋转径向刀架的使用

Application of radial tool holders with clockwise spindle rotation

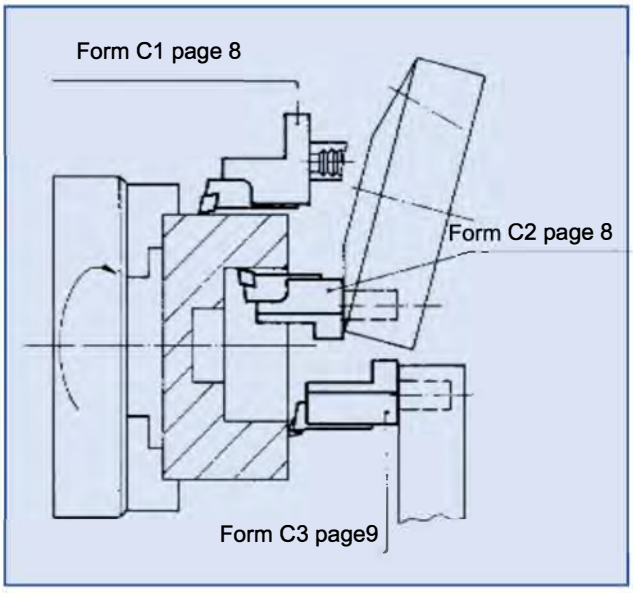

逆时针旋转轴向刀架的应用

Application of axial tool holders with anti-clockwise spindle rotation

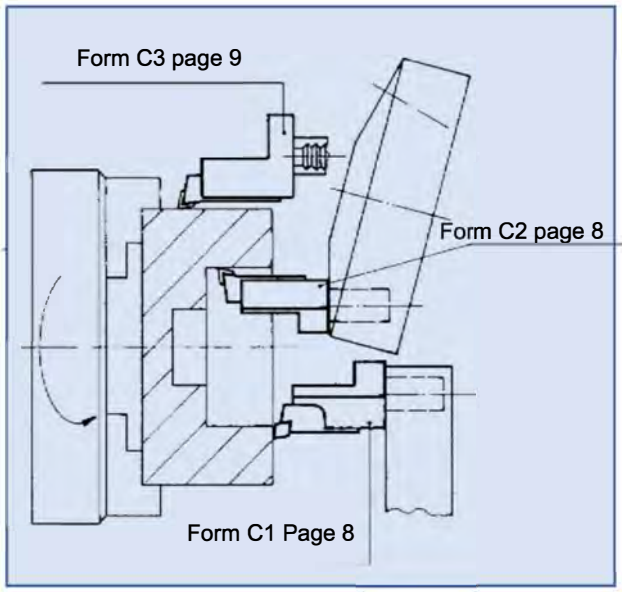

顺时针轴向刀架的应用

Application of axial tool holders with clockwise spindle rotation

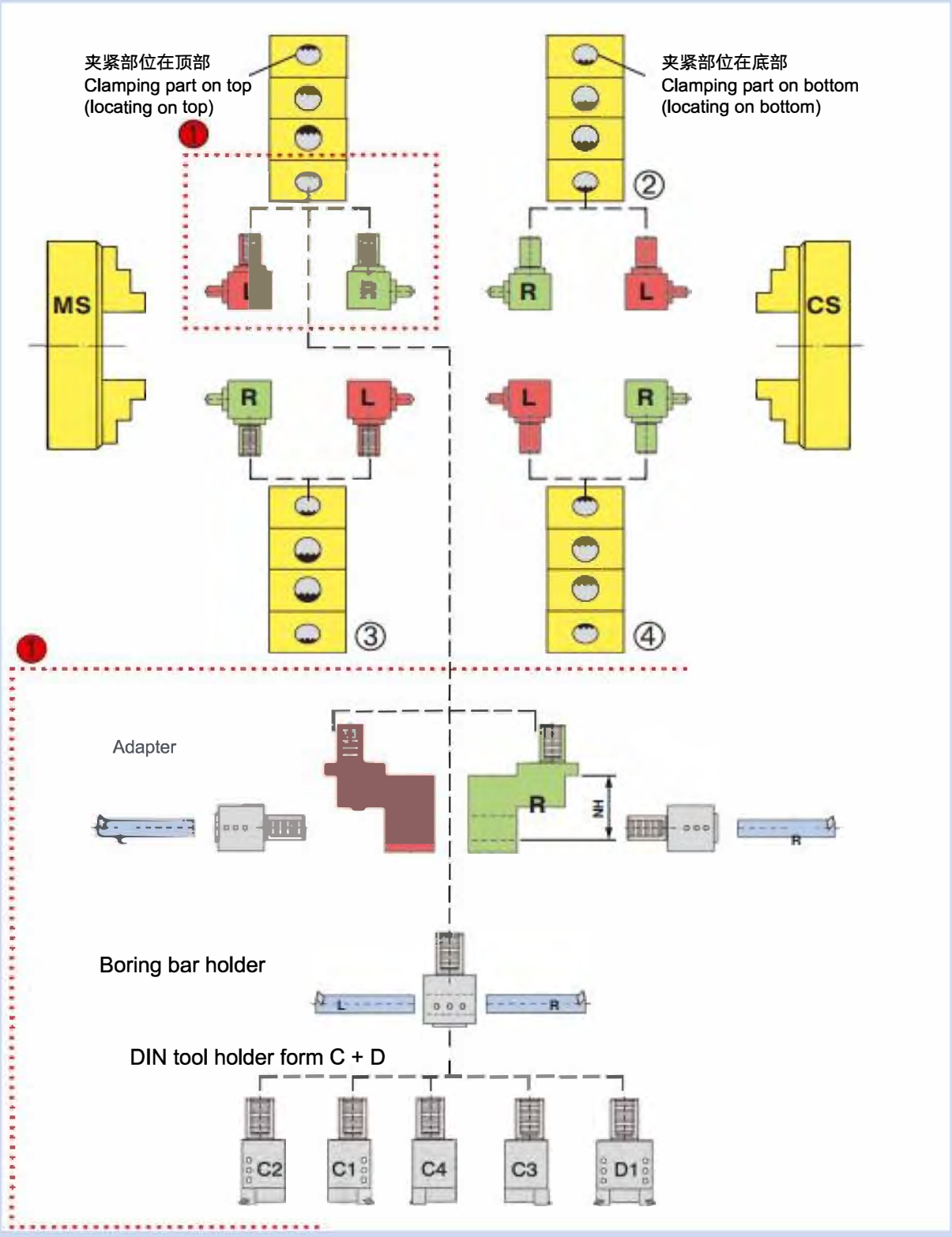
夹紧部位在顶部
Clamping part on top
(locating on top)
夹紧部位在底部
Clamping part on bottom
(locating on bottom)
MS
CS
L
R
Adapter
Boring bar holder
DIN tool holder form C + D
C2
C1
C4
C3
D1

DIN 69880

VDI刀柄 技术特点

N B D 刀座均是根据DIN69880标准制造的。圆柱柄的误差 - 依据 IT6 (H6) 等级 弹簧夹头的径向跳动精度DIN 69880-6
▲标准允许 DIN 6499 和 DIN 6388 弹簧夹头的径向跳动误差为 0.002。
▲用表面硬化钢材制造，硬度达 HRC 58+-2，强度达 800-1000 N/平方毫米。
▲内径、柄和齿间均完全经过打磨处理

TOOLHOLDERS WITH CYLINDRICAL SHANK VDI TECHNICAL FEATURES

All N B D machinery toolholders are manufactured according to DIN 69880.
CYLINDRICAL SHANK'S TOLERANCE - According to the class IT6 (h6)
COLLET CHUCK'S RUNOUT ACCURACY
▲The norm DIN 69880-6 permits a runout error of 0,002 for DIN 6499 and DIN 6388 collet chucks
▲Manufactured with casehardening steel with hardness HRC 58+-2, strenght 800- 1000 N/mm2
▲Internal diameters, shank and toothing are completely grinding finished

数控刀夹系列 NC TOOL HOLDER SERIES

本产品为数控车床、车削加工中心等必备附件，严格按照德DIN69880标准生产，具有结构先进、制造精度高、使用方便和互换性强等优点。可选用不同类型规格的刀夹配置，在数控机床上进行车、钻、镗、铣等加工。

It is essential machine tool accessories for working center of CNC machine.We produce according to German DIN69880standard,it feature developed structure、high accuracy、convenient and alternative etc.It can satisfy the needs ofturning、drilling、boring and milling etc.With various tool holders and allocate different types tool and accessory.

VDI素材 VDI Material



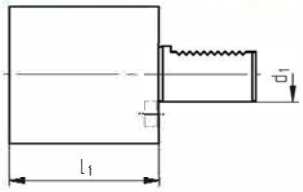

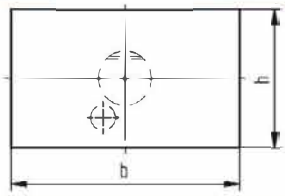

型号 Cat No	d1	l1	b	h
A1-16x44	16	44	78	44
A1-20x65	20	65	100	60
A1-25x75	25	75	100	60
A1-30x85	30	85	130	76
A1-40x100	40	100	151	96
A1-50x125	50	125	160	120
A1-60x160	60	160	165	125



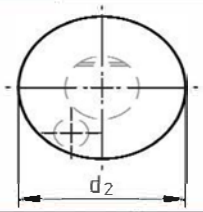

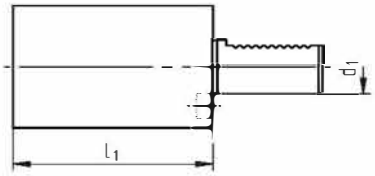

型号 Cat No	d1	l1	d2
A2-16X60	16	60	40
A2-20X70	20	70	50
A2-25X80	25	80	58
A2-25X200	25	200	58
A2-30X100	30	100	68
A2-30X240	30	240	68
A2-40X120	40	120	83
A2-40X200	40	200	83
A2-40X320	40	320	83
A2-50X135	50	135	98
A2-50X220	50	220	98
A2-50X400	50	400	98
A2-60X150	60	150	123
A2-60X480	60	480	123

B1型径向右刀夹 TYPE B1 TOOL HOLDER
with square crossholding fixture right,short



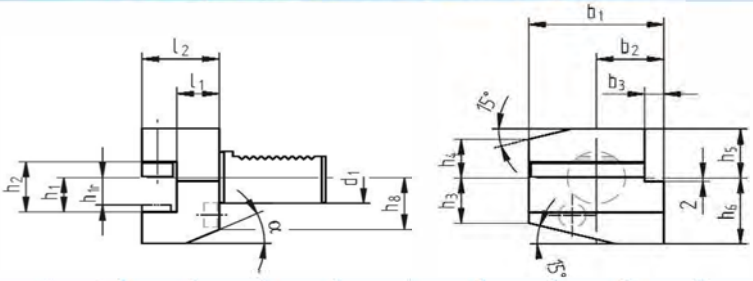

型号 Cat No	d1	b1	b2	b3	h1	h2	h3	h4	h5	h6	h8	11	12	α
B1-16X12X24	16	42	23	5	12	17	15	15	20	22	19	13	24	30°
B1-16X12X34	16	42	23	5	12	17	15	15	20	22	19	23	34	30°
B1-20X16X30	20	55	30	7	16/12	22	19	19	25	30	23	16	30	30°
B1-20X16X40	20	55	30	7	16/12	22	19	19	25	30	23	26	40	30°
B1-25X16X30	25	55	30	7	16/12	22	22.5	22.5	25	30	23	16	30	30°
B1-25X16X40	25	55	30	7	16/12	22	22.5	22.5	25	30	23	26	40	30°
B1-30X20X40	30	70	35	10	20/16	29	26	22	28	38	30	22	40	25°
B1-30X20X60	30	70	35	10	20/16	29	26	22	28	38	30	42	60	25°
B1-40X25X44	40	85	42.5	12.5	25/20	34	35	30	32.5	48	——	22	44	——
B1-50X32X55	50	100	50	16	32/25	41	42	35	35	60		30	55	——
B1-60X32X60	60	125	62.5	16	32/25	41	46	42.5	42.5	62.5	——	30	60	——

B2型径向左刀夹 TYPE B2 TOOL HOLDER
with square crossholding fixture left, short



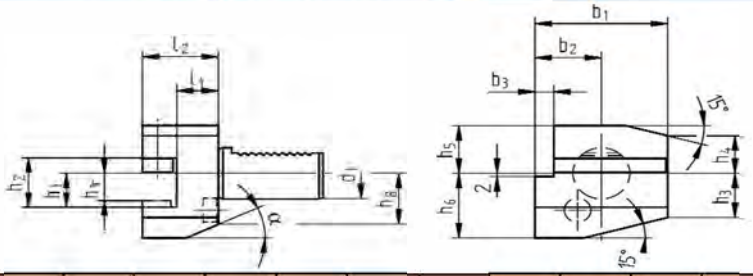

型号 Cat No	d1	b1	b2	b3	h1	h2	h3	h4	h5	h6	h8	11	12	α
B2-16X12X24	16	42	23	5	12	17	15	15	20	22	19	13	24	30°
B2-16X12X34	16	42	23	5	12	17	15	15	20	22	19	23	34	30°
B2-20X16X30	20	55	30	7	16/12	22	19	19	25	30	23	16	30	30°
B2-20X16X40	20	55	30	7	16/12	22	19	19	25	30	23	26	40	30°
B2-25X16X30	25	55	30	7	16/12	22	22.5	22.5	25	30	25	16	30	30°
B2-25X16X40	25	55	30	7	16/12	22	22.5	22.5	25	30	25	26	40	30°
B2-30X20X40	30	70	35	10	20/16	29	26	22	28	38	30	22	40	25°
B2-30X20X60	30	70	35	10	20/16	29	26	22	28	38	30	42	60	25°
B2-40X25X44	40	85	42.5	12.5	25/20	34	35	30	32.5	48	——	22	44	——
B2-50X32X55	50	100	50	16	32/25	41	42	35	35	60		30	55	——
B2-60X32X60	60	125	62.5	16	32/25	41	46	42.5	42.5	62.5	——	30	60	——

B3型径向右刀夹（刀具反装）　TYPE B3 TOOL HOLDER
with square crossholding fixture overhead right, short



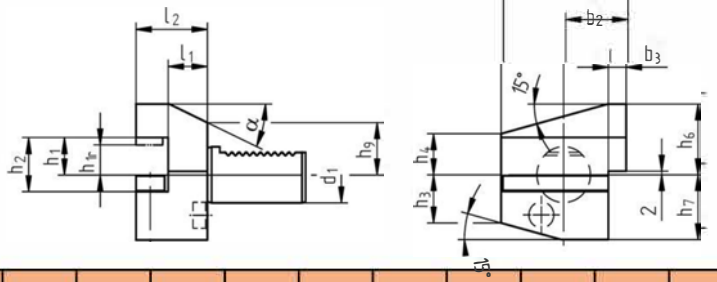

型号 Cat No	d1	b1	b2	b3	h1	h2	h3	h4	h6	h7	h9	11	12	α
B3-16X12X24	16	42	23	5	12	17	15	15	22	20	19	13	24	30°
B3-16X12X34	16	42	23	5	12	17	15	15	22	20	19	23	34	30°
B3-20X16X30	20	55	30	7	16/12	22	19	19	30	25	23	16	30	30°
B3-20X16X40	20	55	30	7	16/12	22	19	19	30	25	23	26	40	30°
B3-25X16X30	25	55	30	7	16/12	22	22.5	22.5	30	25	25	16	30	30°
B3-25X16X40	25	55	30	7	16/12	22	22.5	22.5	30	25	25	26	40	30°
B3-30X20X40	30	70	35	10	20/16	29	26	22	38	35	28	22	40	25°
B3-30X20X60	30	70	35	10	20/16	29	26	22	38	35	28	42	60	25°
B3-40X25X44	40	85	42.5	12.5	25/20	34	35	30	48	42.8	—	22	44	—
B3-50X32X55	50	100	50	16	32/25	41	42	35	60	50	—	30	55	—
B3-60X32X60	60	125	62.5	16	32/25	41	46	42.5	62.5	62.5	—	30	60	—

B4型径向左刀夹(刀具反装)　TYPE B4 TOOL HOLDER
with square crossholding fixture overhead left,short



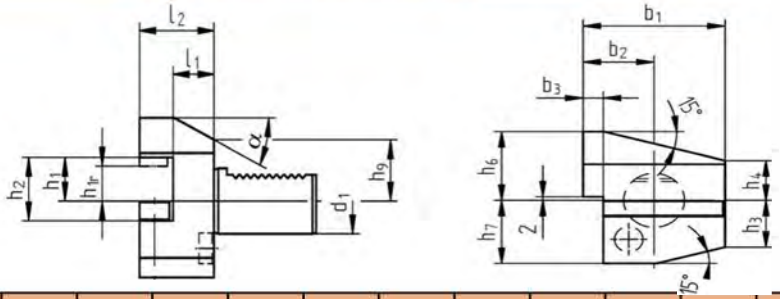

型号 Cat No	d1	b1	b2	b3	h1	h2	h3	h4	h6	h7	h9	11	12	α
B4-16X12X24	16	42	23	5	12	17	15	15	22	20	19	13	24	30°
B4-16X12X34	16	42	23	5	12	17	15	15	22	20	19	23	34	30°
B4-20X16X30	20	55	30	7	16/12	22	19	19	30	25	23	16	30	30°
B4-20X16X40	20	55	30	7	16/12	22	19	19	30	25	23	26	40	30°
B4-25X16X30	25	55	30	7	16/12	22	22.5	22.5	30	25	25	16	30	30°
B4-25X16X40	25	55	30	7	16/12	22	22.5	22.5	30	25	25	26	40	30°
B4-30X20X40	30	70	35	10	20/16	29	26	22	38	35	28	22	40	25°
B4-30X20X60	30	70	35	10	20/16	29	26	22	38	35	28	42	60	25°
B4-40X25X44	40	85	42.5	12.5	25/20	34	35	30	48	42.5	—	22	44	—
B4-50X32X55	50	100	50	16	32/25	41	42	35	60	50	—	30	55	—
B4-60X32X60	60	125	62.5	16	32/25	41	46	42.5	62.5	62.5	—	30	60	—

B5型径向右刀夹(加长型) TYPE B5 TOOL HOLDER with square crossholding fixture right,long



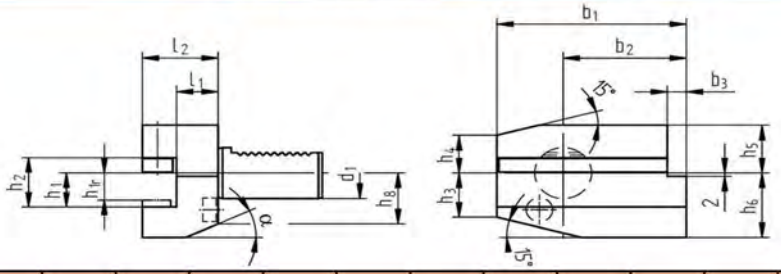

型号 Cat No	d1	b1	b2	b3	h1	h2	h3	h4	h5	h6	h8	11	12	α
B5-16X12X24	16	58	39	5	12	17	15	15	20	22	19	13	24	30°
B5-16X12X34	16	58	39	5	12	17	15	15	20	22	19	23	34	30°
B5-20X16X30	20	75	50	7	16/12	22	19	19	25	30	23	16	30	30°
B5-20X16X40	20	75	50	7	16/12	22	19	19	25	30	23	26	40	30°
B5-25X16X30	25	75	50	7	16/12	22	22.5	22.5	25	30	25	16	30	30°
B5-25X16X40	25	75	50	7	16/12	22	22.5	22.5	25	30	25	26	40	30°
B5-30X20X40	30	100	65	10	20/16	29	26	22	28	38	30	22	40	25°
B5-30X20X60	30	100	65	10	20/16	29	26	22	28	38	30	42	60	25°
B5-40X25X44	40	118	75.5	12.5	25/20	34	35	30	32.5	48	——	22	44	——
B5-50X32X55	50	130	80	16	32/25	41	42	35	35	60	——	30	55	——
B5-60X32X60	60	145	82.5	16	32/25	41	46	42.5	42.5	62.5	——	30	60	——

B6型径向左刀夹（加长型） TYPE B6 TOOL HOLDER with square crossholding fixture left,long



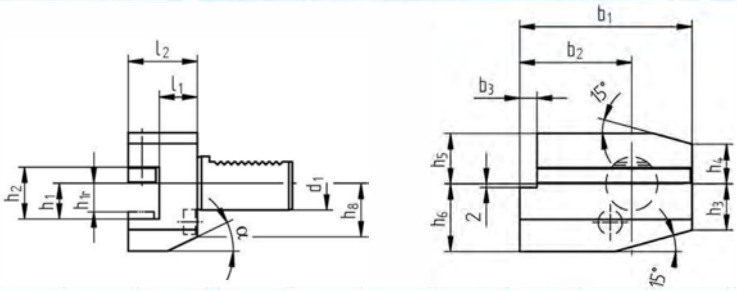

型号 Cat No	d1	b1	b2	b3	h1	h2	h3	h4	h5	h6	h8	11	12	α
B6-16X12X24	16	58	39	5	12	17	15	15	20	22	19	13	24	30°
B6-16X12X34	16	58	39	5	12	17	15	15	20	22	19	23	34	30°
B6-20X16X30	20	75	50	7	16/12	22	19	19	25	30	23	16	30	30°
B6-20X16X40	20	75	50	7	16/12	22	19	19	25	30	23	26	40	30°
B6-25X16X30	25	75	50	7	16/12	22	22.5	22.5	25	30	25	16	30	30°
B6-25X16X40	25	75	50	7	16/12	22	22.5	22.5	25	30	25	26	40	30°
B6-30X20X40	30	100	65	10	20/16	29	26	22	28	38	30	22	40	25°
B6-30X20X60	30	100	65	10	20/16	29	26	22	28	38	30	42	60	25°
B6-40X25X44	40	118	75.5	12.5	25/20	34	35	30	32.5	48	——	22	44	——
B6-50X32X55	50	130	80	16	32/25	41	42	35	35	60	——	30	55	——
B6-60X32X60	60	145	82.5	16	32/25	41	46	42.5	42.5	62.5	——	30	60	——

B7型径向右刀夹（加长型、刀具反装） TYPE B7 TOOL HOLDER
with square crossholding fixture overhead right, long



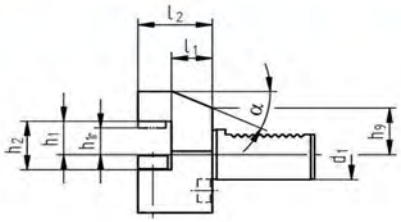

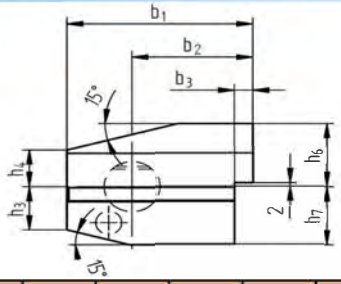

型号 Cat No	d1	b1	b2	b3	h1	h2	h3	h4	h6	h7	h9	11	12	α
B7-16X12X24	16	58	39	5	12	17	15	15	22	20	19	13	24	30°
B7-16X12X34	16	58	39	5	12	17	15	15	22	20	19	23	34	30°
B7-20X16X30	20	75	50	7	16/12	22	19	19	30	25	23	16	30	30°
B7-20X16X40	20	75	50	7	16/12	22	19	19	30	25	23	26	40	30°
B7-25X16X30	25	75	50	7	16/12	22	22.5	22.5	30	25	25	16	30	30°
B7-25X16X40	25	75	50	7	16/12	22	22.5	22.5	30	25	25	26	40	30°
B7-30X20X40	30	100	65	10	20/16	29	26	22	38	35	28	22	40	25°
B7-30X20X60	30	100	65	10	20/16	29	26	22	38	35	28	42	60	25°
B7-40X25X44	40	118	75.5	12.5	25/20	34	35	30	48	42.5	——	22	44	——
B7-50X32X55	50	130	80	16	32/25	41	42	35	60	50	——	30	55	——
B7-60X32X60	60	145	82.5	16	32/25	41	46	42.5	62.5	62.5	——	30	60	——

B8型径向左刀夹(加长型、刀具反装) TYPE B8 TOOL HOLDER
with square crossholding fixture overhead left,long



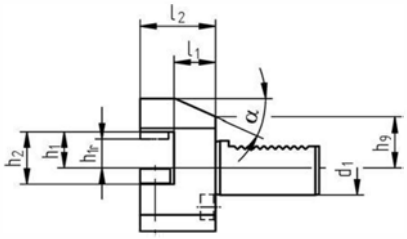

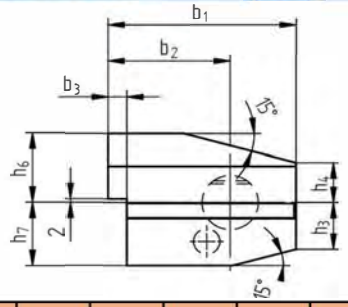

型号 Cat No	d1	b1	b2	b3	h1	h2	h3	h4	h6	h7	h9	11	12	α
B8-16X12X24	16	58	39	5	12	17	15	15	22	20	19	13	24	30°
B8-16X12X34	16	58	39	5	12	17	15	15	22	20	19	23	34	30°
B8-20X16X30	20	75	50	7	16/12	22	19	19	30	25	23	16	30	30°
B8-20X16X40	20	75	50	7	16/12	22	19	19	30	25	23	26	40	30°
B8-25X16X30	25	75	50	7	16/12	22	22.5	22.5	30	25	25	16	30	30°
B8-25X16X40	25	75	50	7	16/12	22	22.5	22.5	30	25	25	26	40	30°
B8-30X20X40	30	100	65	10	20/16	29	26	22	38	35	28	22	40	25°
B8-30X20X60	30	100	65	10	20/16	29	26	22	38	35	28	42	60	25°
B8-40X25X44	40	118	75.5	12.5	25/20	34	35	30	48	42.5	——	22	44	——
B8-50X32X55	50	130	80	16	32/25	41	42	35	60	50	——	30	55	——
B8-60X32X60	60	145	82.5	16	32/25	41	46	42.5	62.5	62.5	——	30	60	——

C1型轴向右刀夹 TYPE C1 TOOL HOLDER
with longitudinal square holding fixture, right



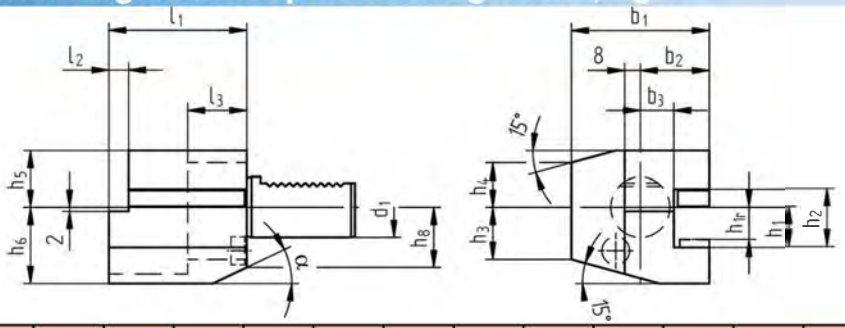

型号 Cat No	d1	b1	b2	b3	h1	h2	h3	h4	h5	h6	h8	l1	l2	l3	α
C1-16X12	16	43	24	13	12	17	15	15	20	22	19	44	5	20	30°
C1-20X16/55	20	52	27	13	16/12	22	19	19	25	30	23	55	7	30	30°
C1-20X16/50	20	52	27	13	16/12	22	19	19	25	30	23	50	——	30	30°
C1-25X16	25	58	33	19	16/12	22	22.5	22.5	25	30	25	55	7	20	30°
C1-25X20	25	62	37	19	20/16	29	22.5	22.5	28	35	28	55	7	20	30°
C1-30X20	30	70	35	17	20/16	29	26	22	28	38	30	70	10	30	25°
C1-40X25	40	85	45.5	21	25/20	34	35	30	32.5	48	——	85	12.5	30	——
C1-50X32	50	100	50	26	32/25	41	42	35	35	60	——	100	16	40	——
C1-60X32	60	125	62.5	33	32/25	41	46	42.5	42.5	62.5	——	125	16	40	——

C2型轴向左刀夹 TYPE C2 TOOL HOLDER
with longitudinal square holding fixture,left



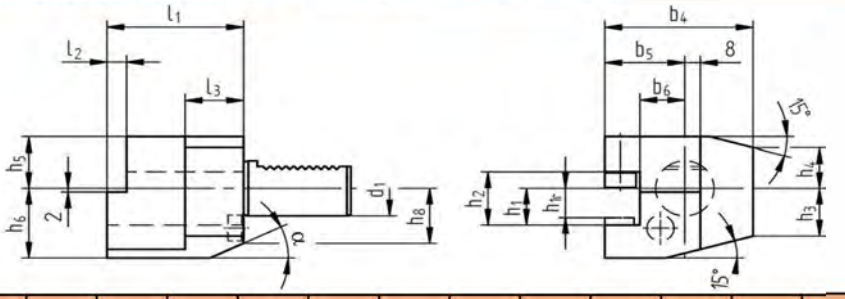

型号 Cat No	d1	b4	b5	b6	h1	h2	h3	h4	h5	h6	h8	l1	l2	l3	α
C2-16X12	16	43	24	13	12	17	15	15	20	22	19	44	5	20	30°
C2-20X16/55	20	——	——	——	16/12	22	19	19	25	30	23	55	7	30	30°
C2-20X16/50	20	65	40	26	16/12	22	19	19	25	30	23	50	——	30	30°
C2-25X16	25	58	33	19	16/12	22	22.5	22.5	25	30	25	55	7	20	30°
C2-25X20	25	62	37	19	20/16	29	22.5	22.5	28	35	28	55	7	20	30°
C2-30X20	30	76	41	23	20/16	29	26	22	28	38	30	70	10	30	25°
C2-40X25	40	90	47.5	25.5	25/20	34	35	30	32.5	48	——	85	12.5	30	——
C2-50X32	50	105	55	30.5	32/25	41	42	35	35	60	——	100	16	40	——
C2-60X32	60	125	62.5	33	32/25	41	46	42.5	42.5	62.5	——	125	16	40	——

C3型轴向右刀夹(刀具反装) TYPE C3 TOOL HOLDER
with longitudinal square holding fixture overhead,right



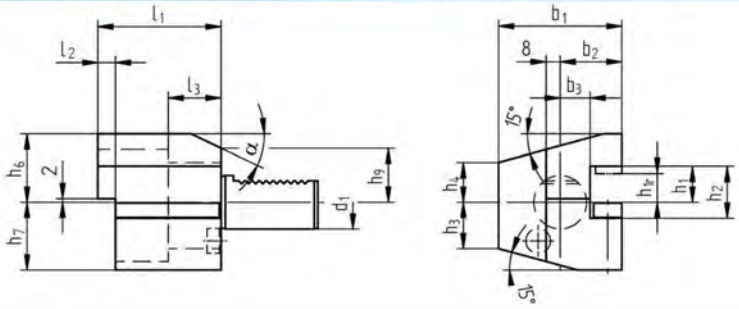

型号 Cat No	d1	b1	b2	b3	h1	h2	h3	h4	h6	h7	h9	l1	l2	l3	α
C3-16X12	16	43	24	13	12	17	15	15	22	20	19	44	5	20	30°
C3-20X16/55	20	52	27	13	16/12	22	19	19	30	25	23	55	7	30	30°
C3-20X16/50	20	65	40	26	16/12	22	19	19	30	25	23	50	——	30	30°
C3-25X16	25	58	33	19	16/12	22	22.5	22.5	30	25	25	55	7	20	30°
C3-25X20	25	62	37	19	20/16	29	22.5	22.5	35	28	28	55	7	20	30°
C3-30X20	30	70	35	17	20/16	29	26	22	38	35	28	70	10	30	25°
C3-40X25	40	85	42.5	21	25/20	34	35	30	48	42.5	——	85	12.5	30	——
C3-50X32	50	100	50	26	32/25	41	42	35	60	50	——	100	16	40	——
C3-60X32	60	125	62.5	33	32/25	41	46	42.5	62.5	62.5	——	125	16	40	——

C4型轴向左刀夹(刀具反装) TYPE C4 TOOL HOLDER
with longitudinal square holding fixture overhead,left



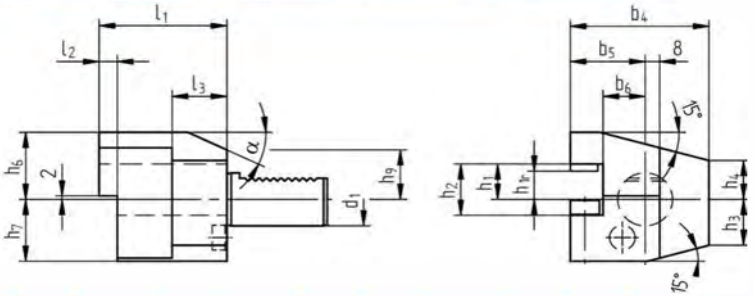

型号 Cat No	d1	b4	b5	b6	h1	h2	h3	h4	h6	h7	h9	l1	l2	l3	α
C4-16X12	16	43	24	13	12	17	15	15	22	20	19	44	5	20	30°
C4-20X16/55	20	——	——	——	16/12	22	19	19	30	25	23	55	7	30	30°
C4-20X16/50	20	65	40	26	16/12	22	19	19	30	25	23	50	——	30	30°
C4-25X16	25	58	33	19	16/12	22	22.5	22.5	30	25	25	55	7	20	30°
C4-25X20	25	62	37	19	20/16	29	22.5	22.5	35	28	28	55	7	20	30°
C4-30X20	30	76	41	23	20/16	29	26	22	38	35	28	70	10	30	25°
C4-40X25	40	90	47.5	25.5	25/20	34	35	30	48	42.5	——	85	12.5	30	——
C4-50X32	50	105	55	30.5	32/25	41	42	35	60	50	——	100	16	40	——
C4-60X32	60	125	62.5	33	32/25	41	46	42.5	62.5	62.5	——	125	16	40	——

D1型多方向刀架 TOOLHOLDER WITH MULTIPLE SEATS



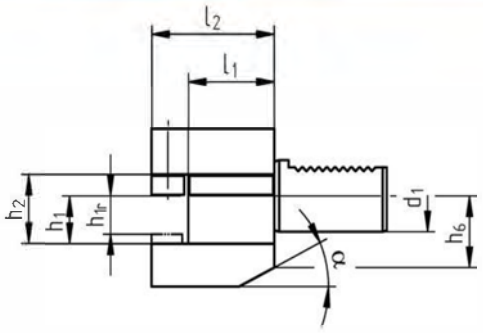

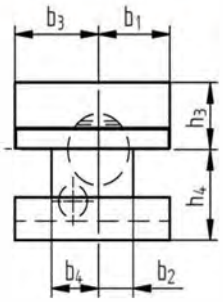

型号 Cat No	d1	b1	b2	b3	b4	h1	h2	h3	h4	h6	l1	l2	α
D1-25X16	25	33	19	33	19	16	22	25	30	25	34	48	30°
D1-30X20	30	35	17	41	23	20/16	29	28	38	30	42	60	25°
D1-40X25	40	42.5	21	47.5	25.5	25/20	34	32.5	48	——	50	72	——
D1-50X32	50	50	26	55	30.5	32/25	41	35	60	——	60	85	——
D1-60X32	60	57.5	33	57.5	33	32/25	41	42.5	62.5	——	85	110	——

D2型多方向倒置刀架 TOOLHOLDER WITH MULTIPLE SEATS UPSIDE DOWN



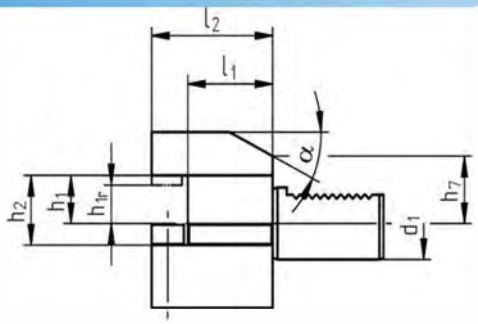

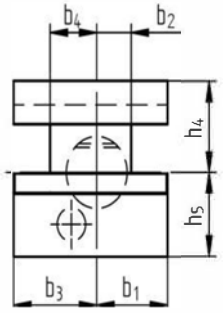

型号 Cat No	d1	b1	b2	b3	b4	h1	h2	h4	h5	h7	l1	l2	α
D2-25X16	25	33	19	33	19	16	22	30	25	25	34	48	30°
D2-30X20	30	35	17	41	23	20/16	29	38	35	28	42	60	25°
D2-40X25	40	42.5	21	47.5	25.5	25/20	34	48	42.5	——	50	72	——
D2-50X32	50	50	26	55	30.5	32/25	41	60	50	——	60	85	——
D2-60X32	60	57.5	33	57.5	33	32/25	41	62.5	62.5	——	85	110	——

E1型圆柱孔刀夹(钻孔) TYPE E1 TOOL HOLDER
for boring bars with cylindrical shank

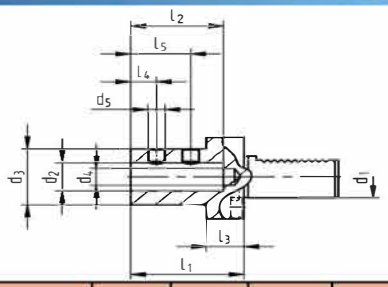

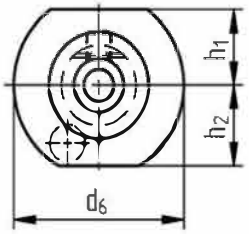



型号 Cat No	d1	d2	d3	d4	d5	d6	h1	h2	l1	l2	l3	l4	l5
E1-20X10	20	10	32	8	M8	50	–	23	67	54	18	15	35
E1-20X12	20	12	32	8	M10	50	–	23	67	54	18	15	35
E1-20X14	20	14	36	10	M10	50	–	23	67	54	22	15	35
E1-20X16	20	16	40	12	M10	50	–	23	67	54	18	15	35
E1-20X20	20	20	40	12	M10	50	–	23	67	54	18	15	35
E1-20X25	20	25	45	17	M12	50	–	23	71	59	18	17	40
E1-25X16	25	16	40	12	M10	58	25	25	67	54	18	15	35
E1-25X20	25	20	40	12	M10	58	25	25	67	54	18	15	35
E1-25X25	25	25	45	17	M12	58	25	25	71	59	18	17	40
E1-25X32	25	32	52	24	M12	58	25	25	75	63	18	17	44
E1-30X10	30	10	32	8	M8	68	28	30	67	54	22	15	35
E1-30X12	30	12	32	8	M10	68	28	30	67	54	22	15	35
E1-30X14	30	14	36	10	M10	68	28	30	67	54	22	15	35
E1-30X16	30	16	40	12	M10	68	28	30	67	54	22	15	35
E1-30X20	30	20	40	12	M10	68	28	30	67	54	22	15	35
E1-30X25	30	25	45	17	M12	68	28	30	71	59	22	17	40
E1-30X32	30	32	52	24	M12	68	28	30	75	63	22	17	44
E1-30X40	30	40	65	24	M16	68	28	30	90	73	22	22	50
E1-40X10	40	10	32	8	M8	83	32.5	–	67	54	22	15	35
E1-40X12	40	12	32	8	M10	83	32.5	–	67	54	22	15	35
E1-40X14	40	14	36	10	M10	83	32.5	–	67	54	22	15	35
E1-40X16	40	16	40	12	M10	83	32.5	–	67	54	22	15	35
E1-40X18	40	18	40	12	M10	83	32.5	–	67	54	22	15	35
E1-40X20	40	20	40	12	M10	83	32.5	–	67	54	22	15	35
E1-40X25	40	25	45	17	M12	83	32.5	–	75	59	22	17	40
E1-40X32	40	32	52	24	M12	83	32.5	–	75	63	22	17	44
E1-40X40	40	40	65	25	M16	83	32.5	–	90	73	22	22	50
E1-40X50	40	50	75	32	M16	83	32.5	–	100	83	22	24	60
E1-50X10	50	10	30	8	M10	98	35	–	67	54	30	15	35
E1-50X12	50	12	32	8	M10	98	35	–	67	56	30	15	35
E1-50X16	50	16	40	12	M10	98	35	–	67	56	30	15	35
E1-50X20	50	20	40	12	M10	98	35	–	67	54	30	15	35
E1-50X25	50	25	45	17	M12	98	35	–	80	59	30	17	40
E1-50X32	50	32	52	24	M12	98	35	–	80	63	30	17	44
E1-50X40	50	40	65	32	M16	98	35	–	90	73	30	22	50
E1-50X50	50	50	75	42	M16	98	35	–	100	83	30	24	60
E1-60X20	60	20	40	12	M10	123	42.5	–	80	54	30	15	35
E1-60X25	60	25	45	17	M12	123	42.5	–	80	59	30	17	40
E1-60X32	60	32	45	24	M12	123	42.5	–	80	63	30	17	44
E1-60X40	60	40	52	32	M16	123	42.5	–	90	73	30	22	50
E1-60X50	60	50	70	42	M16	123	42.5	–	100	83	30	24	60

E2型圆柱孔刀夹(铣、镗孔) TYPE E2 TOOL HOLDER for boring bars with cylindrical shank

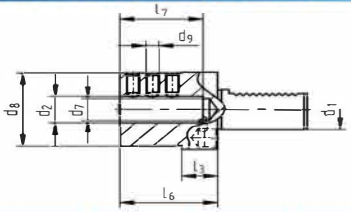

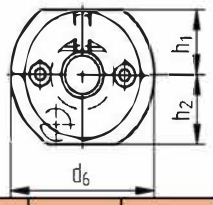



型号 Cat No	d1	d2	d6	d7	d8	d9	h1	h2	l3	l6	l7
E2-25X6	25	6	58	5	40	M6	25	25	18	50	42
E2-25X8	25	8	58	6	40	M6	25	25	18	50	41
E2-25X10	25	10	58	8	40	M6	25	25	18	50	41
E2-25X12	25	12	58	10	40	M8	25	25	18	50	41
E2-25X14	25	14	58	10	50	M8	25	25	18	60	50
E2-25X16	25	16	58	12.5	40	M8	25	25	18	50	41
E2-25X20	25	20	58	12.5	58	M8	25	25	18	50	41
E2-25X25	25	25	58	12.5	58	M8	25	25	18	60	51
E2-30X6	30	6	68	5	55	M6	28	30	22	60	51
E2-30X8	30	8	68	6	55	M6	28	30	22	60	51
E2-30X10	30	10	68	8	55	M6	28	30	22	60	51
E2-30X12	30	12	68	10	55	M8	28	30	22	60	51
E2-30X14	30	14	68	12	55	M8	28	30	22	60	52
E2-30X16	30	16	68	12	55	M8	28	30	22	60	51
E2-30X18	30	18	68	10	55	M8	28	30	22	60	52
E2-30X20	30	20	68	16	55	M8	28	30	22	60	51
E2-30X25	30	25	68	16	55	M8	28	30	22	60	51
E2-30X32	30	32	68	16	68	M8	28	30	22	75	61
E2-40X6	40	6	83	5	55	M6	32.5	–	22	75	67
E2-40X8	40	8	83	6	55	M8	32.5	–	22	75	67
E2-40X10	40	10	83	8	55	M10	32.5	–	22	67	57
E2-40X12	40	12	83	10	55	M10	32.5	–	22	75	61
E2-40X14	40	14	83	10	55	M8	32.5	–	22	75	63
E2-40X16	40	16	83	12	55	M10	32.5	–	22	75	61
E2-40X18	40	18	83	10	55	M8	32.5	–	22	75	62
E2-40X20	40	20	83	16	55	M10	32.5	–	22	75	61
E2-40X25	40	25	83	20.5	55	M10	32.5	–	22	75	61
E2-40X32	40	32	83	20.5	83	M10	32.5	–	22	75	61
E2-40X40	40	40	83	20.5	83	M10	32.5	–	22	90	76
E2-40X50	40	50	83	20.5	83	M12	32.5	–	22	90	75
E2-50X8	50	8	98	6	55	M6	35	–	30	75	67
E2-50X10	50	10	98	8	55	M6	35	–	30	75	67
E2-50X12	50	12	98	10	68	M8	35	–	30	90	76
E2-50X16	50	16	98	12	68	M10	35	–	30	90	76
E2-50X20	50	20	98	16	68	M12	35	–	30	90	76
E2-50X25	50	25	98	20	68	M12	35	–	30	90	76
E2-50X32	50	32	98	25.5	68	M12	35	–	30	90	76
E2-50X40	50	40	98	25.5	98	M12	35	–	30	90	76
E2-50X50	50	50	98	25.5	98	M12	35		30	100	86
E2-60X12	60	12	123	10	68	M8	42.5		30	90	76
E2-60X16	60	16	123	12	68	M10	42.5		30	90	76
E2-60X18	60	18	123	12	55	M8	42.5		30	90	76
E2-60X20	60	20	123	16	68	M12	42.5		30	90	76
E2-60X25	60	25	123	20	68	M12	42.5	–	30	90	76
E2-60X32	60	32	123	25	68	M12	42.5	–	30	90	76
E2-60X40	60	40	123	35	98	M12	42.5	–	30	90	76
E2-60X50	60	50	123	40	98	M12	42.5	–	30	100	86

E3-型DIN6388 EOC夹头刀夹 TYPE E3 COLLET HOLDER

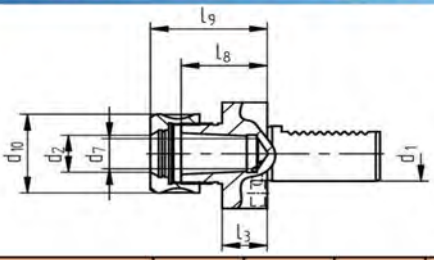

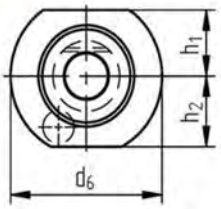



型号 Cat No	d1	d2 A	d2 B	d6	d7	d10	h1	h2	l3	l8	l9
E3-16XC16	16	2-16	5-15	40	6.7	43	18	--	13	36	45.5
E3-20XC16	20	2-16	5-15	50	9	43	--	23	18	42	57
E3-20XC20	20	2-20	6-20	50	9	50	--	23	18	46	62
E3-25XC16	25	2-16	5-15	58	9	43	25	25	18	42	57
E3-30XC25	30	2-25	6-25	68	16.5	60	28	30	22	59	75
E3-40XC16	40	2-16	5-15	83	20.5	43	32.5	--	22	42	57
E3-40XC25	40	2-25	6-25	83	20.5	60	32.5	--	22	59	75
E3-40XC32	40	4-32	10-32	83	20.5	72	32.5	--	22	73	90
E3-50XC25	50	2-25	6-25	98	25.5	60	35	--	30	59	75
E3-50XC32	50	4-32	10-32	98	25.5	72	35	--	30	73	90
E3-60XC32	60	4-32	10-32	123	40.5	72	42.5	--	30	73	90
E3-60XC40	60	6-29.5	30-40	123	40.5	85	42.5	--	30	82	100

E4型DIN6499 ER夹头刀夹 TYPE E4 COLLET HOLDER

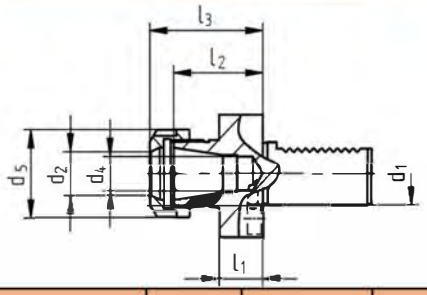

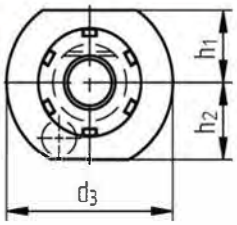



型号 Cat No	d1	d2	d3	d4	d5	h1	h2	l1	l2	l3
E4-16XER16	16	0.5-10	40	6.7	28	18	18	13	30	40
E4-16XER20	16	0.5-13	40	6.7	34	18	18	13	33	44
E4-20XER16	20	0.5-10	50	9	28	--	23	18	30	40
E4-20XER25	20	0.5-16	50	9	42	--	23	18	38	50
E4-20XER32	20	1-20	50	9	50	--	23	18	49	62
E4-25XER25	25	0.5-16	58	9	42	25	25	18	45	57
E4-25XER32	25	1-20	58	9	50	25	25	18	49	62
E4-30XER25	30	0.5-16	68	16.5	42	28	30	22	45	57
E4-30XER32	30	1-20	68	16.5	50	28	30	22	49	62
E4-30XER40	30	2-30	68	16.5	63	28	30	22	56	70
E4-40XER25	40	0.5-16	83	20.5	42	32.5	--	22	45	57
E4-40XER32	40	1-20	83	20.5	50	32.5	--	22	49.5	62
E4-40XER40	40	2-30	83	20.5	63	32.5	--	22	61	75
E4-50XER40	50	2-30	92	25.5	63	35	--	30	61	75
E4-60XER40	60	2-30	123	28.5	63	42.5	--	30	61	75

E7右侧双镗孔刀架 DOUBLE BORING BAR HOLDER, RIGHT

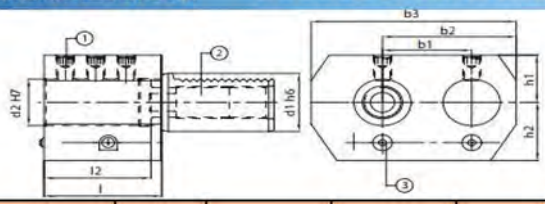



型号 Cat No	d1	d2	h1	h2	l1	l2	b1	b2	B3	Qt
E7-30X25	30	25	28	32	56	52	45	65	95	6
E7-40X32	40	32	32.5	40	66	60	50	75	115	6
E7-50X32	50	32	32.5	47.5	66	60	50	75	115	6
E7-50X50	50	50	35	49	90	80	68	103	152	6

E8左侧双镗孔刀架 DOUBLE BORING BAR HOLDER, LEFT

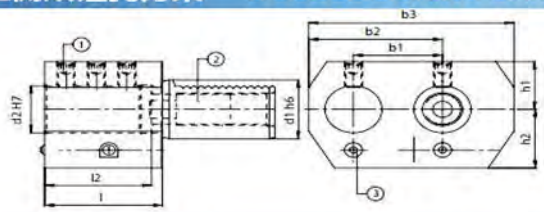



型号 Cat No	d1	d2	h1	h2	l1	l2	b1	b2	B3	Qt
E8-30X25	30	25	28	32	56	52	45	65	95	6
E8-40X32	40	32	32.5	40	66	60	50	75	115	6
E8-50X32	50	32	32.5	47.5	66	60	50	75	115	6
E8-50X50	50	50	35	49	90	80	68	103	152	6

F型莫氏锥孔刀夹 TYPE F TOOL HOLDER

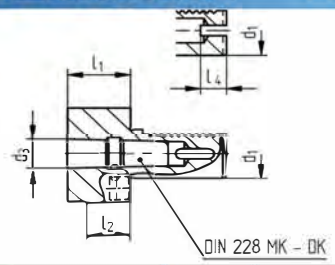

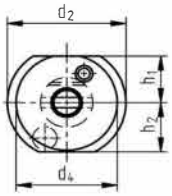



型号 Cat No	d1	d2	d3	d4	h1	h2	l1	l2	l4	MK
20-MK1	20	50	12.065	–	–	23	23	–	7	1
20-MK2	20	50	17.780	–	–	23	55	–	–	2
25-MK1	25	58	12.065	–	25	25	23	–	–	1
25-MK2	25	58	17.780	–	25	25	27	–	–	2
30-MK1	30	68	12.065	–	28	30	27	–	–	1
30-MK2	30	68	17.780	–	28	30	27	–	14	2
30-MK3	30	68	23.825	–	28	30	45	–	–	3
40-MK1	40	83	12.065	55	32.5	–	36	22	–	1
40-MK2	40	83	17.780	55	32.5	–	36	22	–	2
40-MK3	40	83	23.825	58	32.5	–	36	22	14	3
40-MK4	40	83	31.267	68	32.5	–	80	22	–	4
50-MK2	50	98	17.780	55	32.5	–	36	30	–	2
50-MK3	50	98	23.825	58	35	–	36	30	–	3
50-MK4	50	98	31.267	68	35	–	50	30	18	4
50-MK5	50	98	44.399	75	35	–	168	30	–	5
60-MK2	60	123	17.780	58	42.5	–	36	30	–	2
60-MK3	60	123	23.825	58	42.5	–	36	30	–	3
60-MK4	60	123	31.267	68	42.5	–	50	30	–	4
60-MK5	60	123	44.399	98	42.5	–	63	30	32	5

Z2型保护盖 BLANKING PLUG

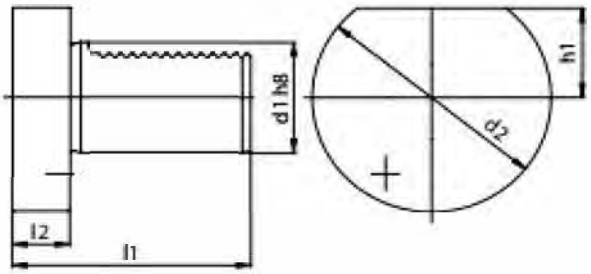



型号 Cat No.	d1	d2	h1	l1	l2
Z2-16S	16	40	18	45	13
Z2-20S	20	50	23	56	16
Z2-30S	30	68	28	71	16
Z2-40S	40	83	32.5	83	20
Z2-50S	50	98	35	98	20
Z2-60S	60	123	42.5	114	20

测试检测棒 Testing Rod for Spindle

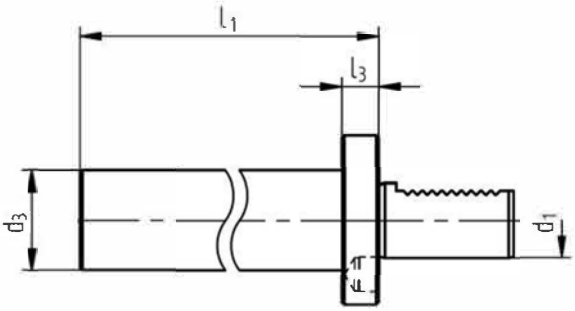

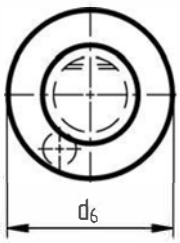



型号 Cat No	d1	d3	d6	l1	l3
16X30X120	16	30	40	120	15
20X40X150	20	40	50	150	15
25X40X150	25	40	58	150	15
30X40X200	30	40	68	200	15
40X40X200	40	40	83	200	15
50X40X200	50	40	98	200	15
60X40X200	60	40	123	200	15

AR 型切断刀架 TOOLHOLDER FOR CUT OFF TOOLS ADJUSTABLE IN HEIGHT, UPSIDE-DOWN, RIGHT

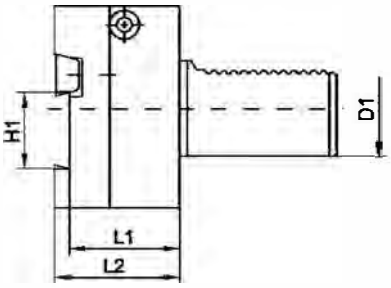

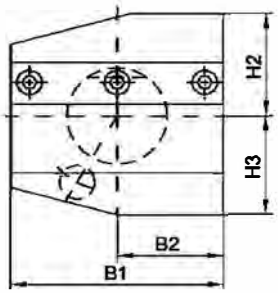



型号 Cat No	d1	H1	B1	B2	h2	h3	l1	l2
AR-30X26	30	26	70	35	32	39	44	50
AR-40X26	40	26	85	42.5	43	41.5	44	50
AR-40X32	40	32	85	42.5	43	41.5	44	50
AR-50X26	50	26	100	50	43	45	44	50
AR-50X32	50	32	100	50	43	45	44	50
AR-60X32	60	32	125	62.5	48	55	44	50

ARU 型切断刀架 TOOLHOLDER FOR CUT OFF TOOLS ADJUSTABLE IN HEIGHT, UPSIDE-DOWN, RIGHT

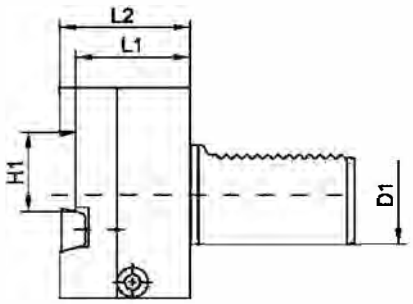

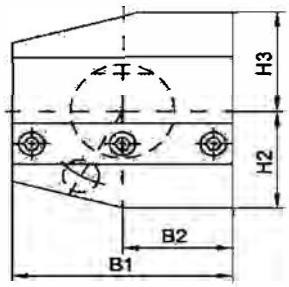



型号 Cat No	d1	H1	B1	B2	h2	h3	l1	l2
ARU-30X26	30	26	70	35	35	38	44	50
ARU-40X26	40	26	85	42.5	41.5	43	44	50
ARU-40X32	40	32	85	42.5	41.5	43	44	50
ARU-50X26	50	26	100	50	45	43	44	50
ARU-50X32	50	32	100	50	45	43	44	50
ARU-60X32	60	32	125	62.5	55	48	44	50

ALU型切断刀架 TOOLHOLDER FOR CUT OFF TOOLS ADJUSTABLE IN HEIGHT, UPSIDE-DOWN, LEFT

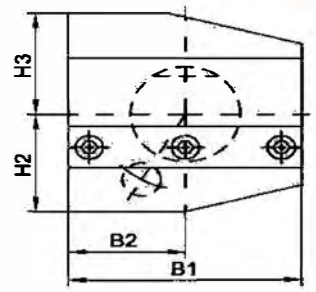

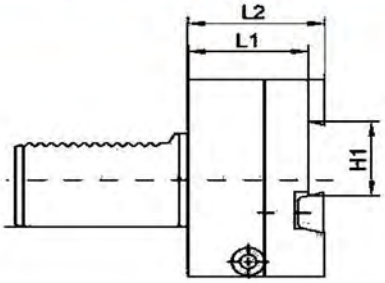



型号 Cat No	d1	H1	B1	B2	h2	h3	l1	l2
ALU-30X26	30	26	70	30	35	38	44	50
ALU-40X26	40	26	85	35	41.5	43	44	50
ALU-40X32	40	32	85	42.5	41.5	43	44	50
ALU-50X26	50	26	100	42.5	45	43	44	50
ALU-50X32	50	32	100	50	45	43	44	50
ALU-60X32	60	32	125	62.5	55	48	44	50

AL型切断刀架 TOOLHOLDER FOR CUT OFF TOOLS ADJUSTABLE IN HEIGHT, LEFT

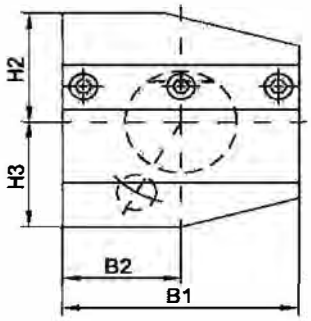

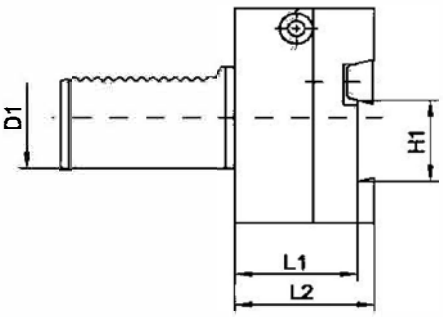



型号 Cat No	d1	H1	B1	B2	h2	h3	l1	l2
AL-30X26	30	26	70	35	32	39	44	50
AL-40X26	40	26	85	42.5	43	41.5	44	50
AL-40X32	40	32	85	42.5	43	41.5	44	50
AL-50X26	50	26	100	50	43	45	44	50
AL-50X32	50	32	100	50	43	45	44	50
AL-60X32	60	32	125	62.5	48	55	44	50

棒材拉取器 Bar Puller

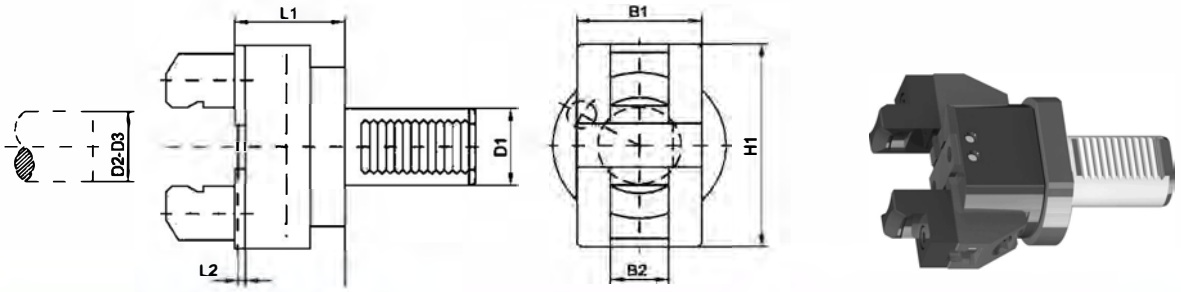

型号 Cat No	d1	d2	d3	B1	B2	H1	L1	L2	L3
ST-20X56	20	6-56	54-100	50	28	72	51	4	46
ST-25X56	25	6-56	54-100	50	28	72	51	4	46
ST-30X56	30	6-56	54-100	50	28	72	51	4	46
ST-40X60	40	10-60	54-100	60	28	110	53	4	48
ST-50X75	50	10-75	62-125	65	28	130	73	5	67

APU型钻头适配刀架 ADAPTORS FOR DRILLS WITH INTERNAL COOLANT SUPPLY

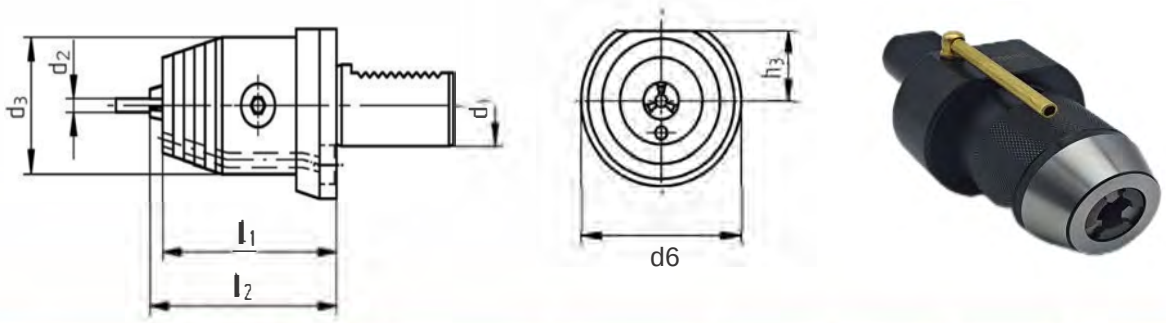

型号 Cat No	d1	d2	d3	d6	h3	l1	l2
APU-30X13	30	1-13	57	68	28	82	88
APU-30X16	30	3-16	57	68	28	82	93
APU-40X13	40	1-13	57	83	32.5	85	91
APU-40X16	40	3-16	57	83	32.5	85	96
APU-50X13	50	1-13	57	98	35	85	91
APU-50X16	50	3-16	57	98	35	85	96

CB1 DIN 69880 COMBINED STATIC HOLDERS Right-hand

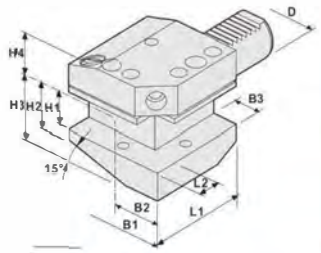

型号 Cat No	D	B1	B2	B3	H1	H2	H3	H4	L1	L2
CB1-20X16	20	65	40	14	16	19	30	25	50	14
CB1-30X20	30	74	40	18	20	26	38	28	70	18
CB1-40X25	40	85	45	22	25	35	47.5	42.5	100	22
CB1-50X32	50	105	55	25	32	42	60	35	120	25
CB1-60X32	60	125	62.5	30	32	46	62.5	42.5	135	30

CB2 DIN 69880 COMBINED STATIC HOLDERS Left-hand

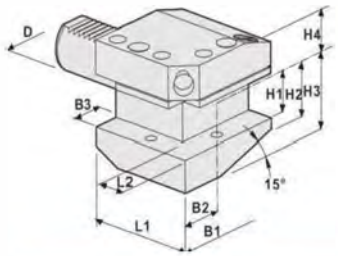

型号 Cat No	D	B1	B2	B3	H1	H2	H3	H4	L1	L2
CB2-20X16	20	65	40	14	16	19	30	25	50	14
CB2-30X20	30	74	40	18	20	26	38	28	70	18
CB2-40X25	40	85	47	22	25	35	47.5	42.5	100	22
CB2-50X32	50	105	55	25	32	42	60	35	120	25
CB2-60X32	60	125	62.5	30	32	46	62.5	42.5	135	30

CB3 DIN 69880 COMBINED STATIC HOLDERS Right-hand

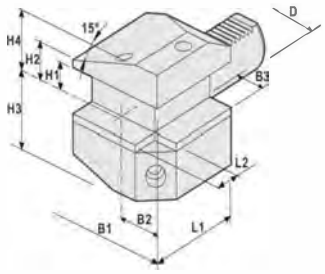

型号 Cat No	D	B1	B2	B3	H1	H2	H3	H4	L1	L2
CB3-20X16	20	65	40	14	16	19	25	30	50	14
CB3-30X20	30	74	40	18	20	22	38	28	70	18
CB3-40X25	40	85	45	22	25	30	42.5	47.5	100	22
CB3-50X32	50	105	55	25	32	35	50	60	120	25
CB3-60X32	60	125	62.5	30	32	42.5	62.5	42.5	135	30

CB4 DIN 69880 COMBINED STATIC HOLDERS Left-hand

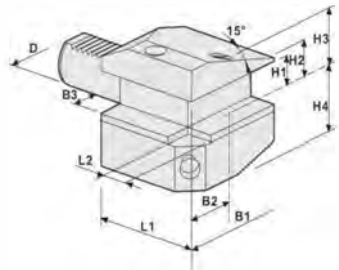

型号 Cat No	D	B1	B2	B3	H1	H2	H3	H4	L1	L2
CB4-20X16	20	65	40	14	16	19	30	25	50	14
CB4-30X20	30	74	40	18	20	22	28	38	70	18
CB4-40X25	40	85	47	22	25	30	47.5	42.5	100	22
CB4-50X32	50	105	55	25	32	35	60	50	120	25
CB4-60X32	60	125	62.5	30	32	42.5	62.5	62.5	135	30

D12 DIN 69880 COMBINED STATIC HOLDERS Right-hand

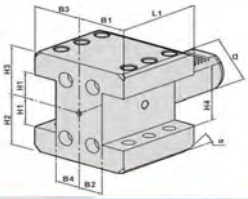

型号 Cat No	D	B1	B2	B3	B4	H1	H2	H3	H4	L1	α
D12-30X20	30	52.5	20	52.5	20	20	38	38	40	80	25°
D12-40X25	40	46	24	46	24	25	48	48	42	85	25°

D1 DIN 69880 COMBINED STATIC HOLDERS Right-hand

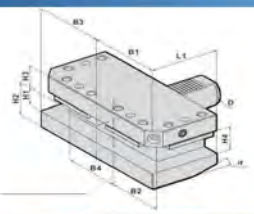

型号 Cat No	D	B1	B2	B3	B4	H1	H2	H3	H4	L1	α
D1-40-C25-76	40	98	76	98	76	25	48	32.5	34	63	15

T1 DIN 69880 AXIAL STATIC HOLDERS

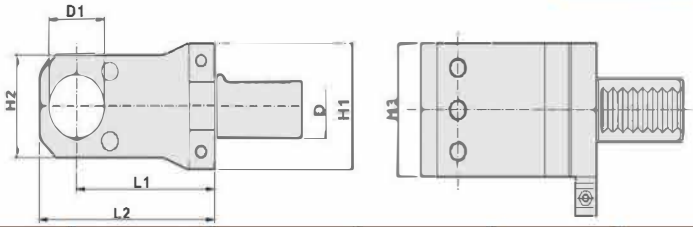

型号 Cat No	D	D1	H1	H2	H3	L1	L2
T1-20X25X70	20	25	--	50	50	70	90
T1-30X32X65	30	32	65	52	62	65	90
T1-30X32X85	30	32	65	52	62	85	108
T1-30X32X100	30	32	65	52	62	100	123
T1-30X32X120	30	32	65	52	62	120	143
T1-30X40X85	30	40	--	65	85	85	112
T1-30X50X85	30	50	--	80	85	85	123
T1-40X32X85	40	32	80	65	85	85	112
T1-40X40X85	40	40	80	65	85	85	112
T1-40X40X100	40	40	80	65	85	100	127
T1-40X40X120	40	40	80	65	85	120	147
T1-40X40X140	40	40	80	65	85	140	167
T1-50X40X100	50	40	90	80	96	100	137
T1-50X50X100	50	50	90	80	96	100	137
T1-50X50X110	50	50	90	82	96	110	147
T1-50X60X110	50	60	98	104	96	110	152
T1-60X50X100	60	50	104	90	120	100	142
T1-60X50X135	60	50	108	94	120	135	177
T1-60X60X100	60	60	104	90	120	100	142
T1-60X60X135	60	60	--	108	120	135	182

T1-X2 DIN 69880 AXIAL STATIC HOLDERS

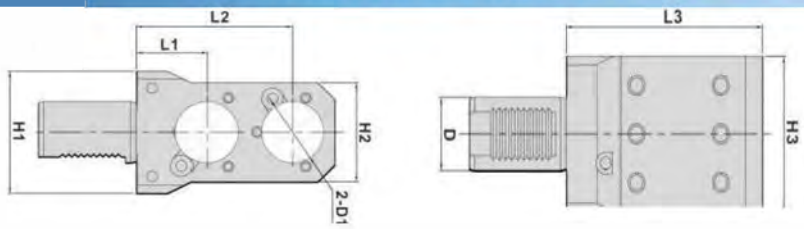

型号 Cat No	D	D1	H1	H2	H3	L1	L2	L3
T1-30-2XB25-113	30	25	--	65	62	80	113	133
T1-30-2XB25-137	30	25	--	65	62	85	137	158
T1-30-2XB32-100	30	32	--	65	62	55	100	128
T1-40-2XB25-120	40	25	80	65	85	85	120	146
T1-40-2XB32-90	40	32	80	65	85	47	90	112
T1-40-2XB40-100	40	40	80	65	85	45	100	127
T1-40-2XB40-120	40	40	80	65	85	65	120	147

VDI刀座锁紧销 FIXING PIN

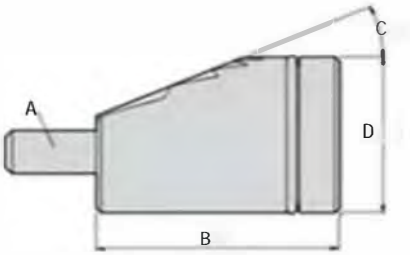



型号 Cat No	A	B	C	D
VDI16/W-16	M5	22	20	16
VDI20/W-18	M6	28	20	18
VDI30/W-22	M8	34	20	22
VDI40/W-28	M10	42	20	28
VDI40/W-40	M10	44	20	40
VDI50/W-36	M10	48	25	36
VDI50/W-50	M12	56	25	50
VDI60/W-42	M12	54	25	42
VDI80/W-50	M16	70	25	50

NBD®

BMT 工具系统

BMT TOOLING SYSTEM



刀塔刀座
CNC turret tool holder

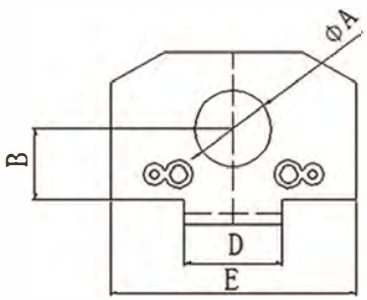



镗孔刀座
Boring tool holder

装U钻、锥柄麻花钻、延长杆、铣刀杆、内孔刀杆、直柄刀具、车床导套等

U drill, taper shank twist drill, extension rod, milling tool rod, Inner hole tool rod, straight handle tool, lathe guide sleeve, etc.

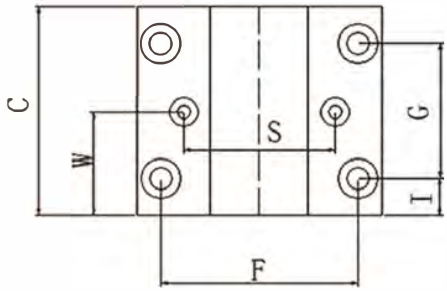

端面刀座
Transverse tool holder

夹持方刀杆

square tool bar, etc.





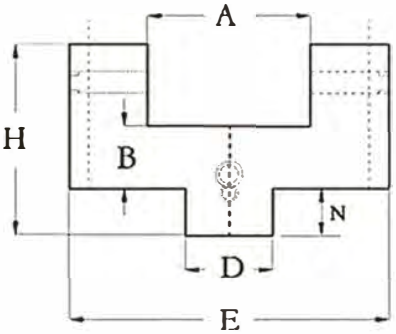

外圆延伸刀座
Cylindrical extension tool holder

夹持方刀杆

square tool bar, etc.

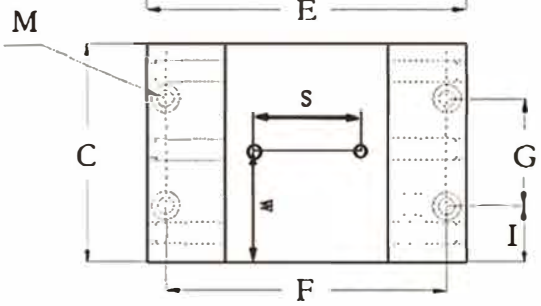



内冷刀座另配后盖

Boring tool holder internal cooling tool holder with back cover









部分型号展示

A small part of the warehouse stock display


F58*G20*D10*A25


F70*G40*D20凸*A32


F70*G40*D20凸*开50


F70*G46*D20*A40


F70*G46*D20*开50


F72*G55*D22*A40


F72*G55*D22*A50


F58*G35*D25*开40


F71*G43*D25*A40


F71*G43*D25*开50


F71*G43*D25*开50
外圆延伸


F68*G28*D30*A32


F68*G42*D30*A32


F68*G42*D30*开50


F70*G38/28*D40*开50


F72*G55*D40*A32


F79*G56*D40*开50


F80*G50*D40*A40


F80*G50*D40*开50


F88*G56*D40*A50

部分型号展示

A small part of the warehouse stock display


F79*G56*D40*A50


F80*G68*D38*A40


F82*G55*D40*A50


F84*G60*D38*A40


F85*G50*D50*A40


F98*G60*D40*开64


F98*G60*D40*A40


F60*G45*D30*A32


F60*G45*D30*开40


F70*G45*D20*A40


F70*G45*D20*开50


F70*G40*D38*A32


F94*G60*D38*A40


F94*G60*D438*A40


F58*G32*D16*A32


F70*G35*D20*A32


F70*G35*D20*开40


F90*G55*D40*A50


F90*G90*D40*A60


F90*G90*D40*开64

部分型号展示

A small part of the warehouse stock display


F72*G67*D20*A32


F72*G67*D20*开50


F72*G45*D16*A40


F72*G45*D16*开50


F86*G60*D20*开50


F70*G45*D15*A25


F70*G45*D15*开50


F70*G45*D15*开50
外圆延伸


F60*G45*D15*开40

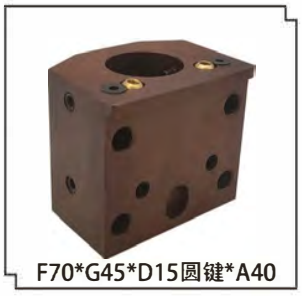
F70*G45*D15圆键*A40


F60*G45*D15*A32


F80*G45*D20*A40


F80*G45*D20*开50


F60*G35*D20*A32


F86*G50*D20凹*A32


F88*G52*D20凹*A50


F70*G36*D20*A32


F90*G60*D20*开64


F70*G40*D20凹*A40


F70*G40*D20凹*开50

BMT系列0度动力刀座
BMT series 0 degree driven tool holder



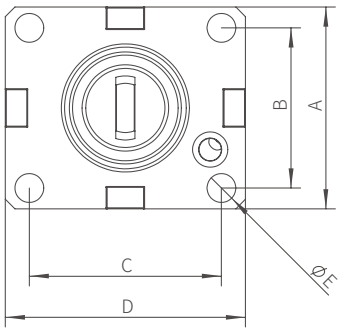

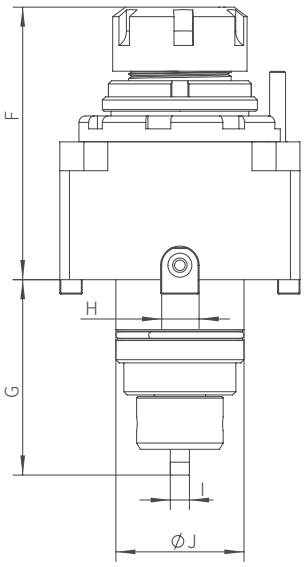

技术参数 Technical Specifications

型号 Cat No	A	B	C	D	E	F	G	H	I	J	夹持范围 Holding range	转速 MAX Speed
BMT40-ER20内锁	63	50	60	75	9	85/59(内锁)	53/61(内锁)	12	6	40	1-13	3000/min
BMT40-ER25-角接	63	50	60	75	9	76(角接)	61	12	6	40	1-16	6000/min
BMT40-ER25-圆锥	63	50	60	75	9	85(圆锥)	61	12	6	40	1-16	3000/min
BMT45-ER20-角接	75	58	58	85	9	78.5(角接)	83	15	6	45	1-13	6000/min
BMT45-ER25-圆锥	75	58	58	85	9	86.5(圆锥)	83	15	6	45	1-16	3000/min
BMT45-ER25-角接内锁	75	58	58	85	9	78.5(角接)	83	15	6	45	1-16	6000/min
BMT45-ER32-角接	75	58	58	85	9	85	83	15	6	45	1-22	6000/min
BMT55-ER32-角接	85	64	64	85	11	82.5(角接)	103.5	15	8	55	1-22	6000/min
BMT55-ER32-圆锥内锁	85	64	64	85	11	87.5(圆锥)	103.5	15	8	55	1-22	3000/min
BMT65-ER32	94	73	70	94	13	94.85	111	18	10	65	1-22	6000/min
BMT75-内ER40	112	90	90	112	13	80.49	110	25	14	75	1-25	6000/min
BMT85-ER50	125	100	100	125	13	107.15	140	25	16	85	1-35	6000/min

BMT系列90度动力刀座(圆锥滚子轴承)
BMT series 90 degree driven tool holder (Tapered roller bearing)



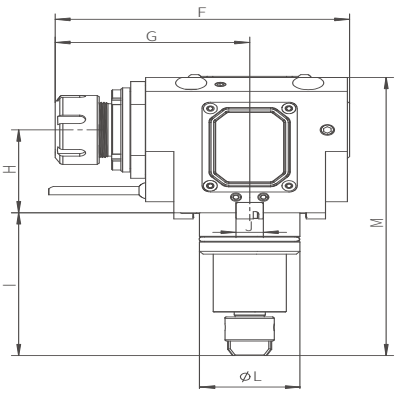

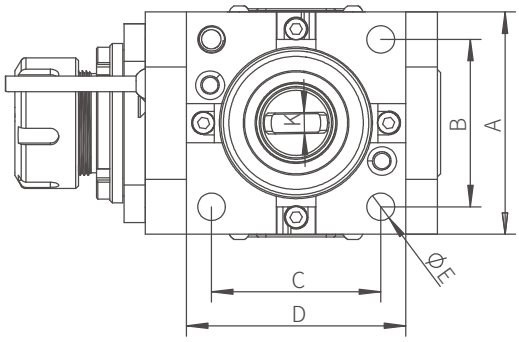

技术参数 Technical Specifications

型号Cat No	A	B	C	D	E	F	G	H	I	J	K	L	M
BMT40-ER25-Y	67	50	60	75	8.5	143	93	60/85	61	12	6	40	151/176
BMT45-ER25-Y	75	58	58	83	9	148.5	94.5	60/90	83	15	6	45	177/207
BMT55-ER32-Y	85	64	64	83	10.5	161.5	106.35	60/85/120	103.5	15	8	55	201.5/226.5/261.5
BMT65-ER40-Y	94	73	70	94	13	168	111.5	72/100	112	18	14	65	226/254
BMT75-ER40-Y	112	90	90	112	13	162.6/170	106.59/114	60/90	110	25	14	75	212/242
BMT85-ER50-Y	125	100	100	125	13	211.65	140.65	110	140	25	16	85	300

BMT系列90度动力刀座(前两后两角接触)
BMT series 90 degree driven tool holder (Angular contact ball bearing)



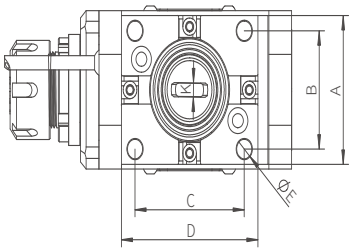

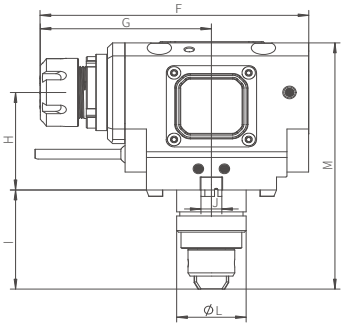

技术参数 Technical Specifications

型号Cat No	A	B	C	D	E	F	G	H	I	J	K	L	M	速比Speed ratio
BMT40-ER25-J	63	50	60	75	8.3	154.86	98.63	60	61	12	6	40	151.5	1:1
BMT45-ER25-J	75	58	58	90	9	173.53	109.03	60	83	15	6	45	177.5	1:1
BMT55-ER32-J	85	64	64	85.8	10.5	179.15	116.35	60	103.5	15	8	55	201.5	1:1

BMT系列0度动力刀座（增速型）
BMT series 0 degree driven tool holder （Speed-increasing type）



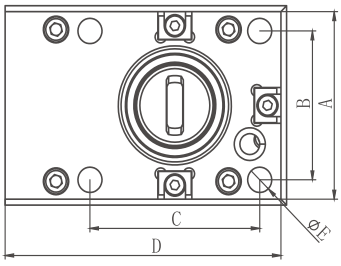

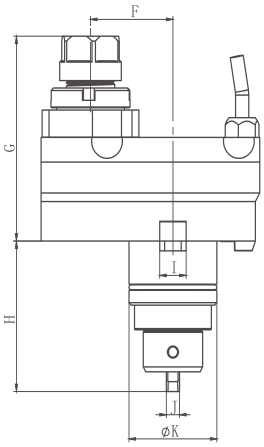

技术参数 Technical Specifications

型号Cat No	A	B	C	D	E	F	G	H	I	J	K	速比 Speed ratio
ER16-BMT40-0-ZS	67	50	60	97.5	8.5	37.5	83	61	12	6	40	1:2
WER20-BMT45-0-ZS	75	58	58	106	8.5	37.5	81.6	83	15	6	45	1:2
NER20—BMT45-0-ZS	75	58	58	106	8.5	37.5	65	83	15	6	45	1:2
NER20—BMT55-0-ZS	85	64	64	106	10.5	37.5	65	103.5	15	8	55	1:2
NER20—BMT65-0 -ZS	94	73	70	111	12.5	37.5	64.5	111	18	10	65	1:2

BMT系列90度动力刀座(增速型)
BMT series 90 degree driven tool holder （Speed-increasing type）



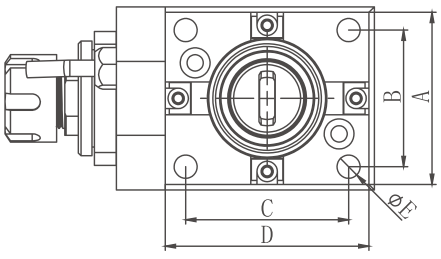

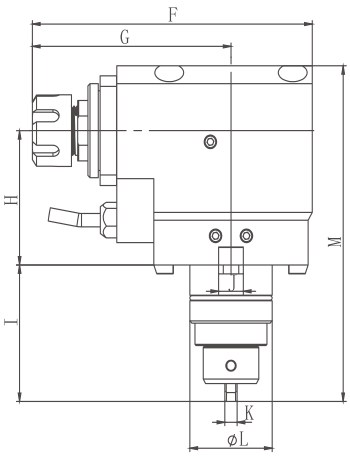

技术参数 Technical Specifications

型号Cat No	A	B	C	D	E	F	G	H	I	J	K	L	M	速比 Speed ratio
BMT40-ER16-90ZS	63	50	60	75	8.5	136	96	60	61	12	6	40	150	1:2
BMT45-ER20-90ZS	75	58	58	83	9	133.5	92	60	83	15	6	45	173	1:2
BMT55-ER20-90ZS	85	64	64	85	10.5	13.5	92	60/85	103.5	15	8	55	193.5/218.5	1:2
BMT65-ER20-90ZS	94	73	70	94	13	139	92	72	111	18	10	65	210	1:2

BMT系列90度动力刀座(减速型)
BMT series 90 degree driven tool holder (Speed-reducing type)



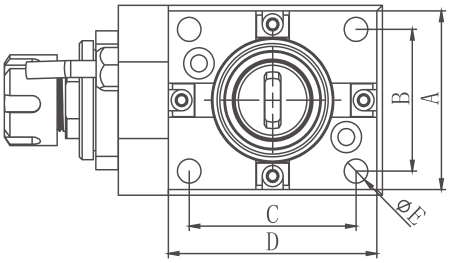

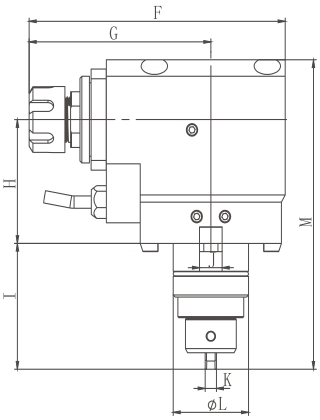

技术参数 Technical Specifications

型号CatNo	A	B	C	D	E	F	G	H	I	J	K	L	M	速比 Speed ratio
BMT40-ER16-90JS	63	50	60	75	8.5	136	96	60	61	12	6	40	150	2:1
BMT45-ER20-90JS	75	58	58	83	9	133.5	92	60	83	15	6	45	173	2:1
BMT55-ER20-90JS	85	64	64	85	10.5	13.5	92	60/85	103.5	15	8	55	193.5/218.5	2:1
BMT65-ER20-90JS	94	73	70	94	13	139	92	72	111	18	10	65	210	2:1

BMT系列0度动力刀座（中心出水型）
BMT series 0 degree driven tool holder (Through-coolant type)



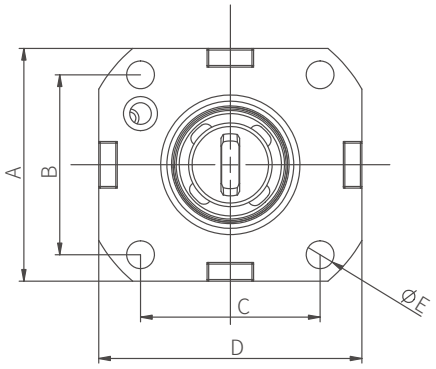

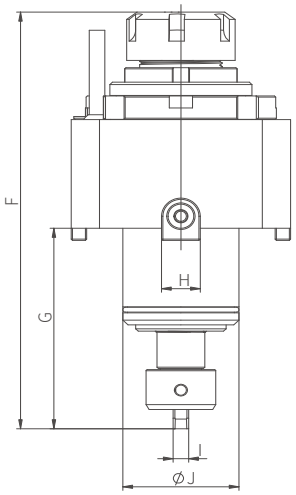

技术参数 Technical Specifications

型号Cat No	A	B	C	D	E	F	G	H	I	J
BMT40-ER25-0-COOL	63	50	60	75	9	156.5	61	12	6	40
BMT45-ER25-0-COOL	75	58	58	85	9	172.5	83	15	6	45
BMT55-ER32-0-COOL	85	64	64	85	11	204	103.5	15	8	55
BMT65-ER40-0-COOL	94	73	70	94	13	217	111	18	10	65

BMT系列90度动力刀座(中心出水型)
BMT series 90 degree driven tool holder
（Through-coolant type）



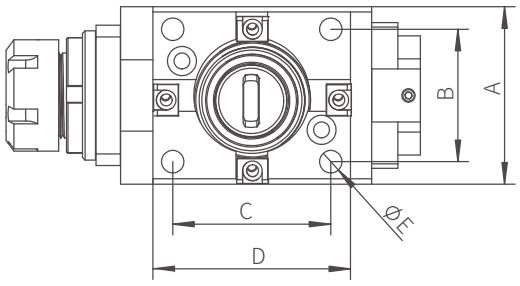

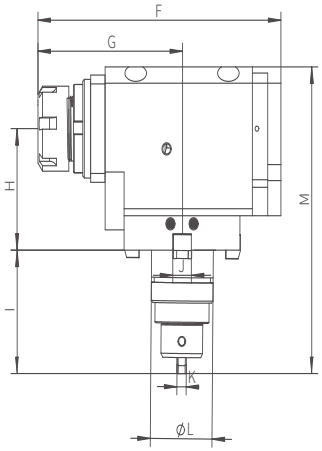

技术参数 Technical Specifications

型号Cat No	A	B	C	D	E	F	G	H	I	J	K	L	M
ER25 BMT40-90-COOL	67	50	60	75	8.5	157.3	93.6	60	61	12	6	40	151.5
ER25 BMT45-90-COOL	75	58	58	83	9	166	96	60	83	15	6	45	177.5
ER32 BMT55-90-COOL	85	64	64	83	10.5	171.5	102.5	60	103.5	15	8	55	201.5
ER40 BMT65-90-COOL	94	73	70	94	13	184	112	72	111	18	10	65	225

BMT系列90度动力刀座(双出后缩型)
BMT series 90 degree driven tool holder
（Double-action rear-retracting typ）



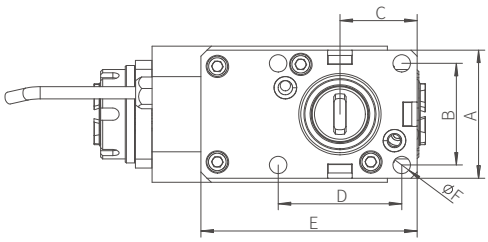

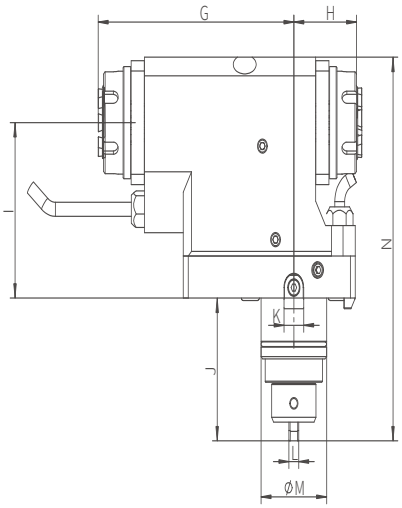

技术参数 Technical Specifications

型号Cat No	A	B	C	D	E	F	G	H	I	J	K	L	M	N
BMT40-ER20X2-90SCHS	63	50	37.5	60	105	8.5	116	38	75	61	12	6	40	164
BMT45-ER25-X290SCHS	75	58	37.5	58	110	8.5	123.5	39	85	83	15	6	45	201
BMT55-ER32X2-90SCHS	85	64	42.5	64	115	10.5	126.5	42	85	103.5	15	8	55	221.5
BMT65-ER32X2-90SCHS	94	73	47	70	120	13	126.5	42	85	111	18	10	65	229

BMT系列0度动力刀座（面铣刀型）
BMT series 0 degree driven tool holder （Face milling type）



*注：
F1:63面铣刀
F2: 80面铣刀
F3:100面铣刀
F4:125面铣刀

Note:

F1: for 63 face mill
F2: for 80 face mill
F3: for 100 face mill
F4: for 125 face mill

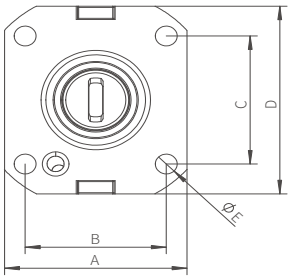

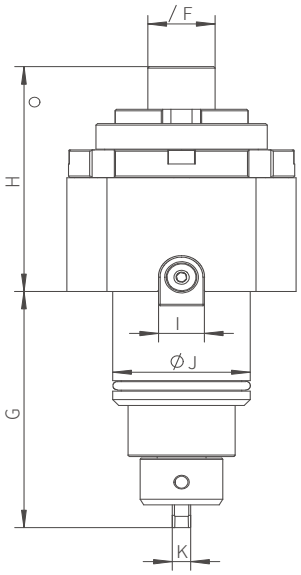

技术参数 Technical Specifications

型号CatNo	A	B	C	D	E	F1	F2	F3	F4	G	H	I	J	K
BMT40-0M	63	50	60	75	9	22	27	32	40	61	76	12	40	6
BMT45-0M	75	58	58	85	9	22	27	32	40	83	78.5	15	45	6
BMT55-0M	85	64	64	85	11	22	27	32	40	103.5	82.5	15	55	8
BMT65-0M	94	70	73	94	13	22	27	32	40	111	83	18	65	10

BMT系列90度动力刀座(面铣刀型)
BMT series 90 degree driven tool holder （Face milling type）



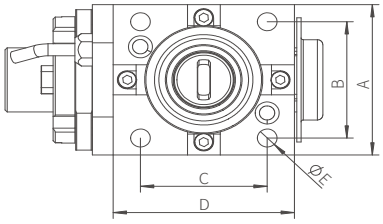

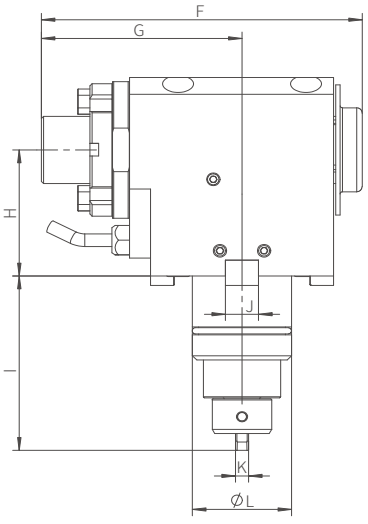

*注：
F1: 63面铣刀
F2:80面铣刀
F3:100面铣刀
F4:125面铣刀

Note:

F1: for 63 face mill
F2: for 80 face mill
F3: for 100 face mill
F4: for 125 face mill

技术参数 Technical Specifications

型号CatNo	A	B	C	D	E	F1	F2	F3	F4	G	H	I	J	K	L
BMT40-90M	63	50	60	75	8.5	22	27	32	40	93	60	61	12	6	40
BMT45-90M	75	58	58	83	9	22	27	32	40	94.5	60	83	15	6	45
BMT55-90M	85	64	64	83	10.5	22	27	32	40	102.5	60	85	15	8	55
BMT65-90M	94	70	73	94	13	22	27	32	40	112	72	111	18	10	65

BMT系列0度动力刀座（双输出型）
BMT series 0 degree driven tool holder （Double-output type）



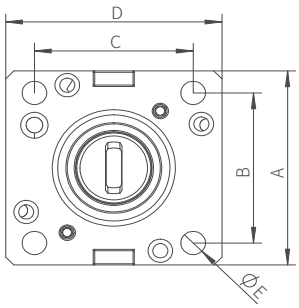

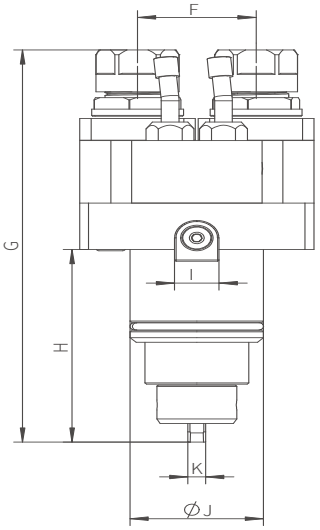

技术参数 Technical Specifications

型号CatNo	A	B	C	D	E	F	G	H	I	J	K
BMT40-ER16X2	75	60	50	63	9	40	154	61	12	40	6
BMT45-ER16X2	75	58	58	79	9	40	169	83	15	45	6
BMT55-ER20X2	85	64	64	85	11	48	198	103.5	15	55	8
BMT65-ER20X2	94	70	73	95	13	48	205	111	18	65	10

BMT系列90度动力刀座 双输出型
BMT series 90 degree driven tool holder （Double-output type）



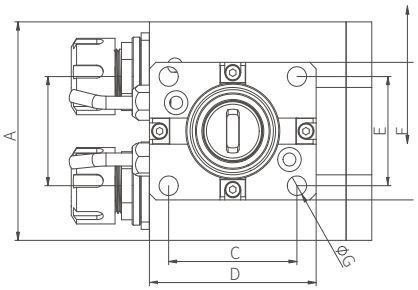

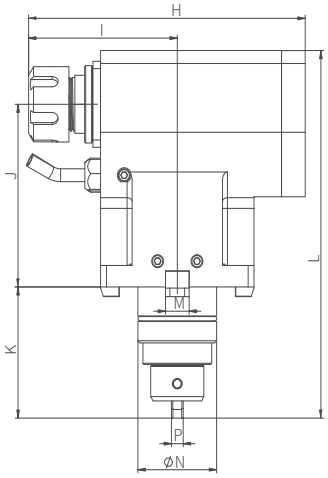

技术参数 Technical Specifications

型号CatNo	A	B	C	D	E	F	G	H	I	J	K	L	M	N	P
BMT40X2ER20	100	50	60	78	50	63	9	140.5	75.5	85	61	171	12	40	6
BMT45X2ER20	100	50	58	85	58	75	9	140.5	75.5	85	83	193	15	45	6
BMT55X2ER20	100	50	64	85	64	85	11	140.5	75.5	85	103.5	213.5	15	55	8
BMT65X2ER20	100	50	73	94	70	94	13	140.5	75.5	85	111	221	18	65	10

BMT系列0度动力刀座（三输出型）
BMT series 0 degree driven tool holder （Three-output type）



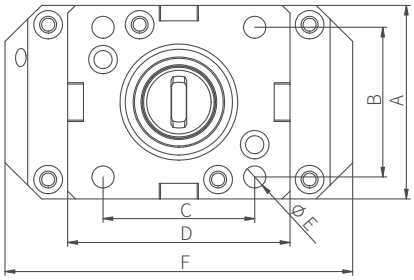

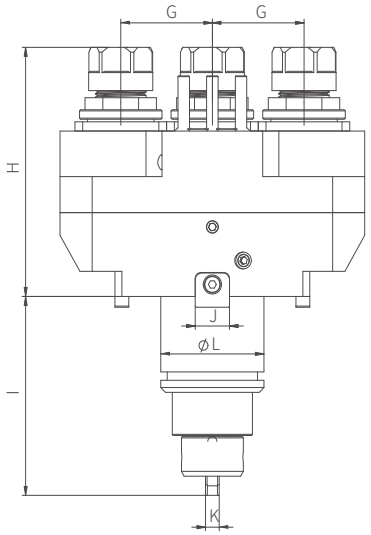

技术参数 Technical Specifications

型号CatNo	A	B	C	D	E	F	G	H	I	J	K	L
ER16X3-BMT40-0	67	50	60	75	8.5	110	33	96	61	12	6	40
ER16X3-BMT45-0	75	58	58	85	8.5	133	40	104	83	15	6	45
ER16X3-BMT55-0	85	64	64	85	10.5	133	40	104	103.5	15	8	55
ER16X3-BMT65-0	94	73	70	98	12.5	121	40	104	111	18	10	65

BMT系列90度动力刀座(三输出型)
BMT series 90 degree driven tool holder （Three-output type）



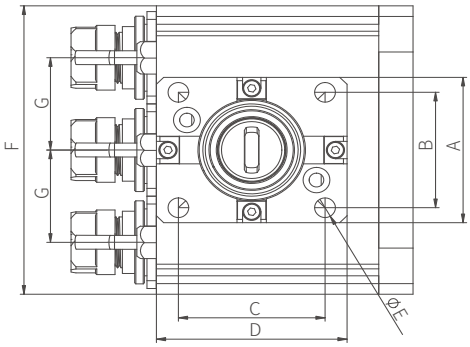

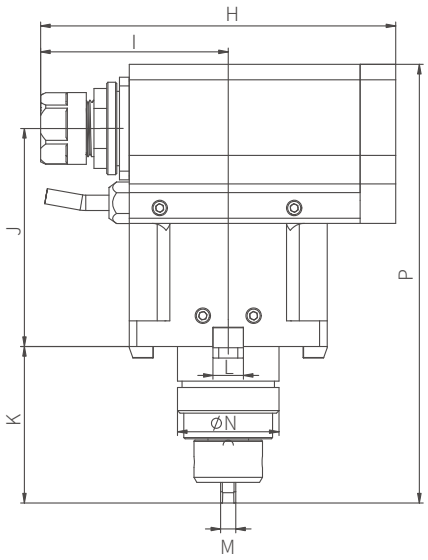

技术参数 Technical Specifications

型号CatNo	A	B	C	D	E	F	G	H	I	J	K	L	M	N	P
ER16T3-BMT40-90	63	50	60	78	8.5	125	40	140	74	85	61	12	6	40	171
ER16T3-BMT45-90	75	58	58	78	8.5	125	40	140	74	85	83	15	6	45	193
ER16T3-BMT55-90	85	64	64	85	10.5	125	40	140	74	85	103	15	8	55	213
ER16T3-BMT65-90	94	73	70	94	13	125	40	140	74	85	111	18	10	65	221

BMT系列90度动力刀座(水平双输出型)
BMT Double output 90 degree driven tool holder

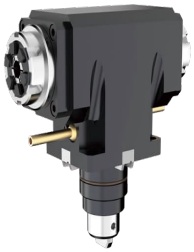

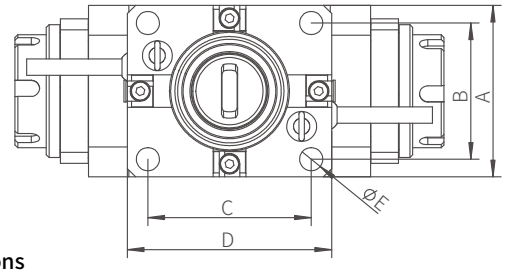

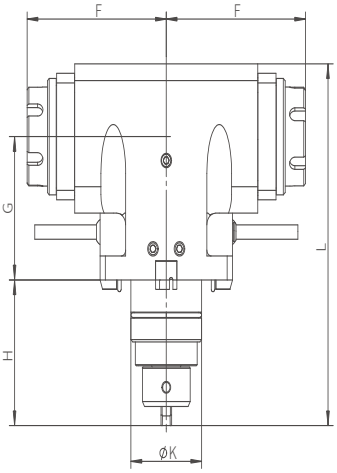

技术参数 Technical Specifications

型号CatNo	A	B	C	D	E	F	G	H	I	J	K	L
BMT40-ER20X2SP	63	50	60	75	8.5	78.8	60	61	12	6	40	151.5
BMT45-ER25X2SP	75	58	58	83	9	81.5	60	83	15	6	45	176.5
BMT55-ER32x2SP	85	64	64	85	10.5	97.5	60	103.5	15	8	55	199.5

BMT系列90度动力刀座(旋风铣型)
BMT series 90 degree driven tool holder
Whirl milling type



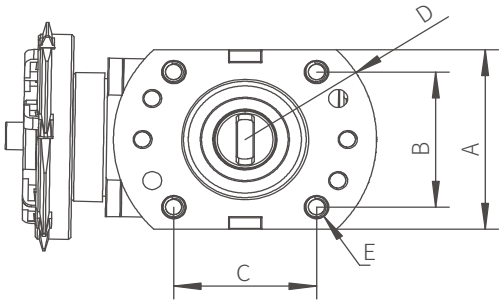

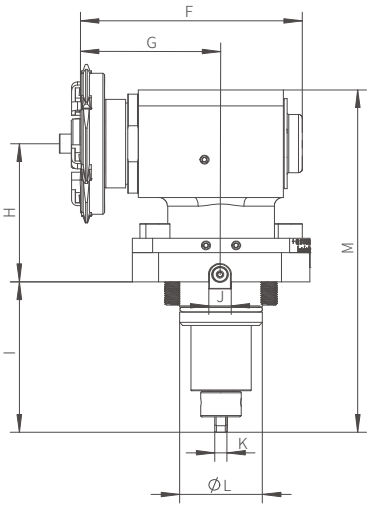

技术参数 Technical Specifications

型号CatNo	A	B	C	D	E	F	G	H	I	J	K	L	M
BMT40-90XF	63	50	60	93	M8	134.4	86.5	85	61	12	6	40	176
BMT45-90XF	75	58	58	108	M8	146.5	92.5	90	83	15	6	45	208
BMT55-90XF	85	64	64	118	M10	147.5	93.5	95	103	15	8	55	236
BMT65-90XF	98	73	70	134	M12	153.5	97	100	111	18	10	65	253

BMT系列万向动力刀座
BMT series Universal driven tool holder



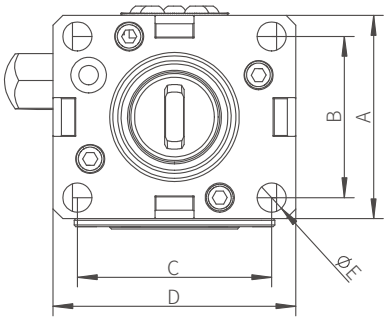

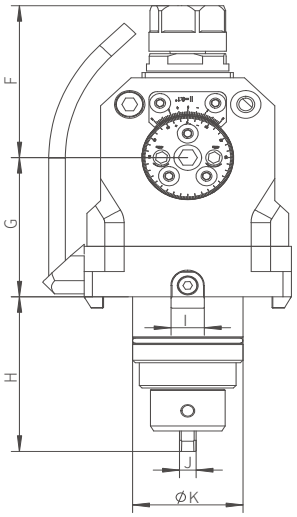

技术参数 Technical Specifications

型号CatNo	A	B	C	D	E	F	G	H	I	J	K	速比 Speed ratio
BMT40-ER16WX	63	50	60	75	9	60	55	61	12	6	40	1:1
BMT45-ER20WX	75	58	58	83	9	79.5	55	83	15	6	45	1:1
BMT55-ER20WX	85	64	64	85	11	79.5	55	103.5	15	8	55	1:1
BMT65-ER20WX	94	73	70	94	13	84.5	65	111	18	10	65	1:1

BMT系列插槽动力刀座(L35)
BMT series Slot driven tool holder(L35)



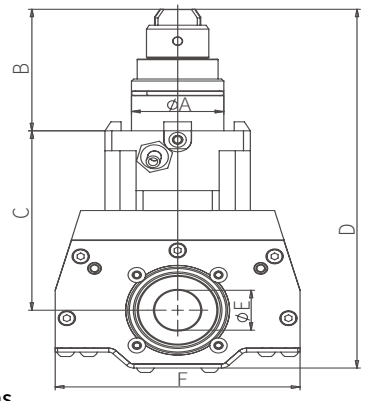

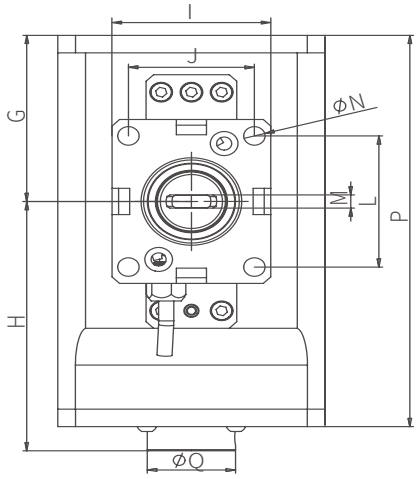

技术参数 Technical Specifications

型号CatNo	A	B	C	D	E	F	G	H	I	J	行程Travel
BMT40-L35	40	61	90	180	20	106	76	114	75	50	35
BMT45-L35	45	83	90	202	20	106	76	114	75	58	35
BMT55-L35	55	103.5	95	227.5	20	106	76	114	75	64	35
BMT65-L35	65	60.8	90	179.8	20	106	76	114	63	50	35

BMT系列滚齿动力刀座
BMT series Gear hobbing driven tool holder

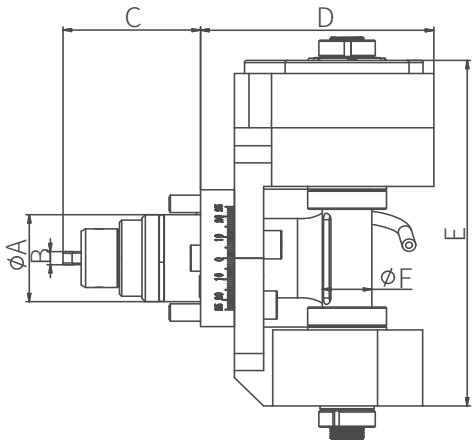



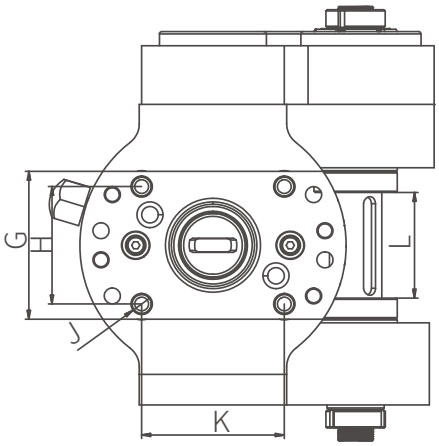





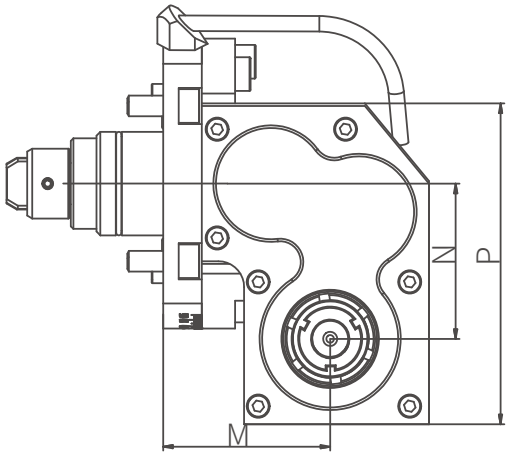

技术参数 Technical Specifications

型号CatNo	A	B	C	D	E	F	G	H	J	K	L	M	N	P	速比 Speed ratio
BMT40-GC	40	6	61	103.5	159	22	63	50	M8	60	45	65	60	124	2:1
BMT45-GC	45	6	83	120.5	167	22	75	58	M8	58	45	82	60	124	2:1
BMT55-GC	55	8	103.5	120.5	179	22	85	64	M10	64	45	82	60	124	2:1
BMT65-GC	65	10	111	120.5	185	22	96	73	M12	70	45	82	60	124	2:1

BMT系列内槽型动力刀座
BMT series Internal groove type driven tool holder



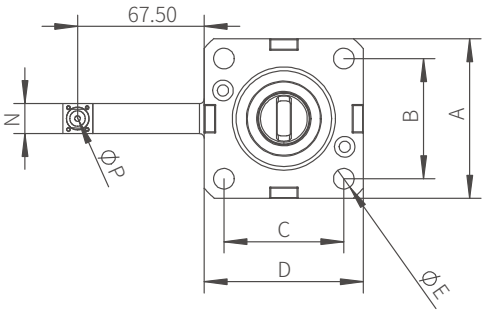

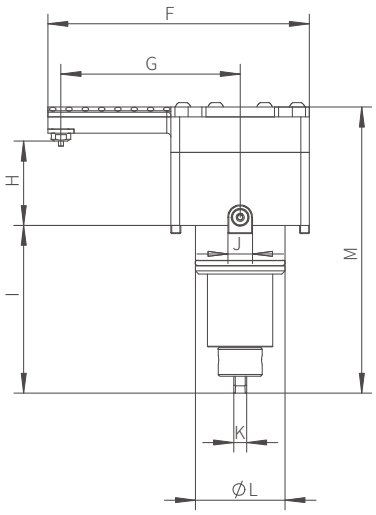

技术参数 Technical Specifications

型号CatNo	A	B	C	D	E	F	G	H	I	J	K	L	M	N	P
BMT40—90-L65-D25	63	50	60	75	9	155.5	110	52	61	12	6	40	134	16	3
BMT45-90-L65-D25	75	58	58	85	9	155.5	110	52	83.5	15	6	45	156.5	16	3
BMT55-90-L65	85	64	64	85	11	160.5	110	52	103.5	15	8	55	176.5	16	3
BMT65-90-L70-D25	94	73	70	94	13	175	120	62	111	18	10	65	194	16	3

BMT系列内槽型动力刀座（D80）
BMT series Internal groove type driven tool holder(D80)



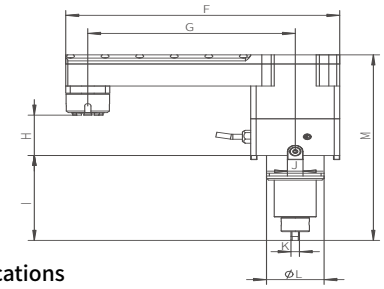

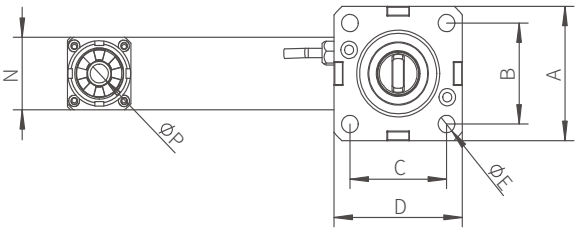

技术参数 Technical Specifications

型号CatNo	A	B	C	D	E	F	G	H	I	J	K	L	M	N	P
IER8-BMT40-90	63	50	60	75	9	250.5	198	60	61	12	6	40	164.5	30	5
IER11-BMT40-90-D53	63	50	60	75	9	255.5	200	60	61	12	6	40	170	36	7
IER16-BMT40-90-D70	63	50	60	75	9	256.5	198	60.5	61	12	6	40	184	46	10
IER16-BMT45-90-D70	75	58	58	85	9	261.5	198	60.5	83	15	6	45	206	46	10
IER20-BMT55-90-D80	85	64	64	85	11	261.5	198	49.5	103.5	15	8	55	226.5	46	12
IER16-BMT65-90-D70	94	73	70	94	13	244	198	70.5	111	18	10	65	244	46	10

BMT系列外径固定刀座
BMT series outer diameter fixed tool holder



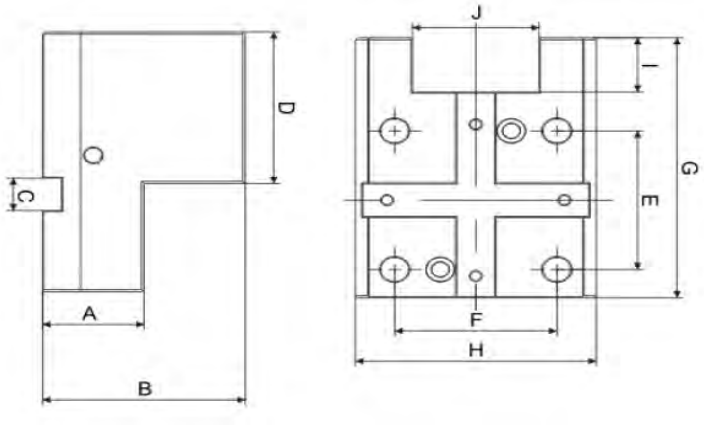

型号 Cat. No	A	B	C	D	E	F	G	H	I	J	重量 Weight (KG)
C402055	30	55	12	58.5	60	50	97	75	20	40	1.8
C452580	40	80	15	67	58	58	110	85	25	50	3.2
C552580	40	80	15	70	64	64	120	95	25	50	3.8
C652580	40	80	18	70	70	73	130	98	25	50	4.7
C6532100	40	100	18	77.5	70	73	137.5	98	32	64	5.1
C75401200	40	100	25	85	90	90	157	130	40	80	5.3

BMT系列反向外径固定刀座
BMT series reverse outer diameter fixed tool holder



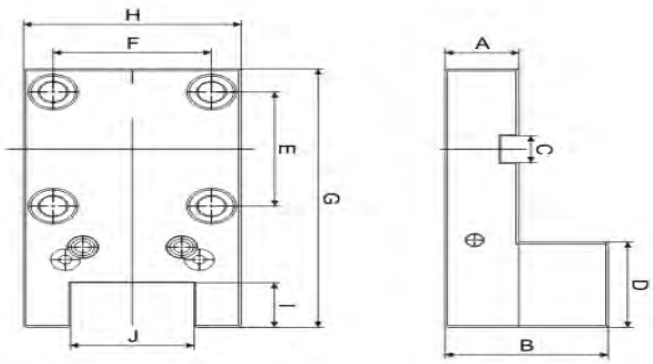

型号 Cat. No	A	B	C	D	E	F	G	H	I	J	重量 Weight (KG)
C452566-FX	36	66	15	42	58	58	128	75	25	50	2.8
C552566-FX	30	66	15	48	64	64	145	88	25	50	3.1

BMT系列斜双内孔固定刀座
BMT series angled double inner hole fixed tool holder



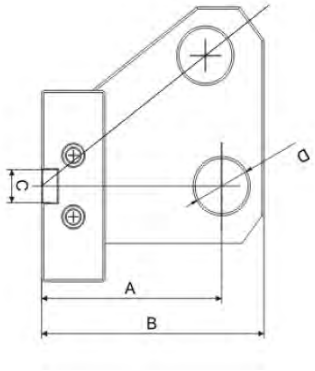

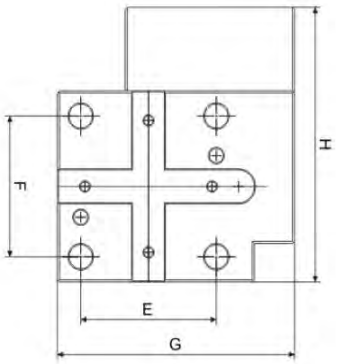

型号 Cat. No	A	B	C	D	E	F	G	H	I	重量 Weight (KG)
B45-S25-85	85	105	15	25	58	58	105	120.2	120.2	4.7
B55-S25-85	85	105	15	25	64	64	112	125	125	4.9

BMT系列双直孔固定刀座
BMT series straight double hole fixed tool holder



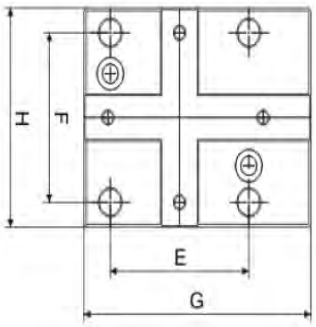

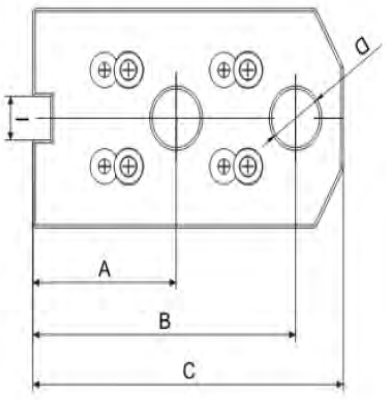

型号 Cat. No	A	B	C	D	E	F	G	H	I	重量 Weight (KG)
B40-S20-40/75	40	75	95	20	60	50	94	63	12	3.5
B45-S20-60/110	60	110	130	20	58	58	95	75	15	5.4
B55-S25-65/110	65	110	127	25	64	64	85	86	15	6.4
B55-S25-95/135	95	135	151	25	64	64	105	86	15	8.5
B65-S25-65/110	65	110	127	25	70	73	120	98	18	8.6

BMT系列双侧外径固定刀座
BMT series double side outer diameter fixed tool holder



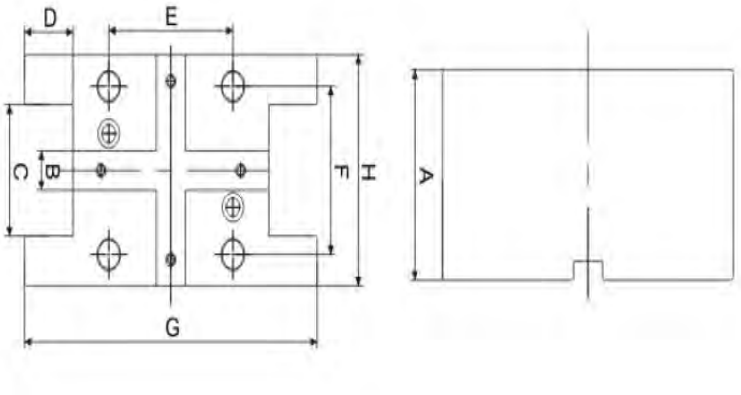

型号 Cat. No	A	B	C	D	E	F	G	H	重量 Weight (KG)
SC452580	80	15	50	25	58	58	141	85	5.5
SC552580	80	15	50	25	64	64	151	88	6

BMT系列端面固定刀座
BMT series end face fixed tool holder



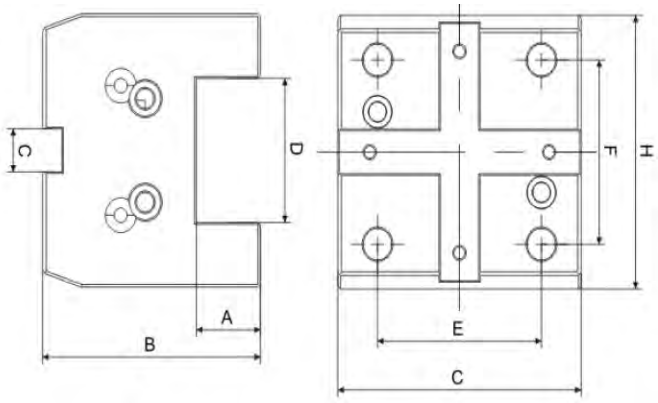

型号 Cat. No	A	B	C	D	E	F	G	H	重量 Weight (KG)
F402045	20	65	12	40	60	50	81	75	2.2
F452560	25	85	15	50	58	58	86	90	3.6
F552560	25	85	15	50	64	65	95	95	4.5
F652575	25	100	18	50	70	73	110	98	5.4
F6532100	32	100	18	64	70	73	110	98	5.2
F7540115	40	115	25	80	90	90	126	130	6.1

BMT系列单侧斜双外径固定刀座
BMT series single-sided oblique double outer diameter fixed tool holder



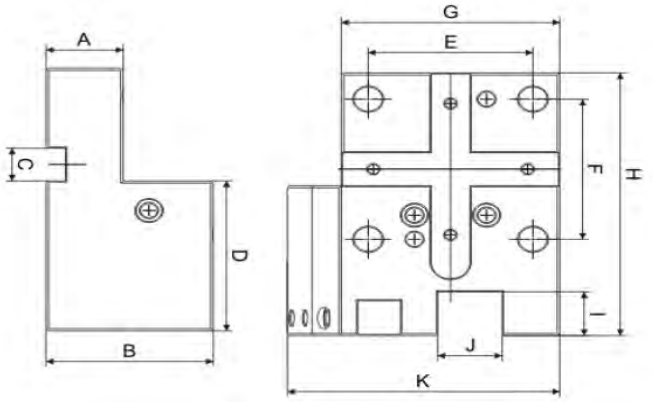

型号 Cat. No	A	B	C	D	E	F	G	H	I	J	K	重量 Weight (KG)
C45-S20-70	32.5	70	15	72	58	58	75	130	20	20	108.1	3.7
C55-S20-65	30	65	15	68.5	64	64	85	120	25	40	106.2	4.2

BMT系列镗孔固定刀座
BMT series boring fixed tool holder



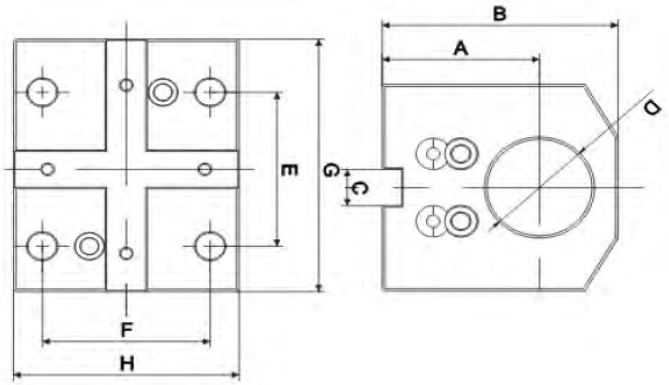

型号 Cat. No	A	B	C	D	E	F	G	H	重量 Weight (KG)
B402560	60	83	12	25	50	60	94	63	2.7
B402585	85	108	12	25	50	60	94	63	3
B403260	60	83	12	32	50	60	94	63	2.7
B453265	65	88	15	32	58	58	95	75	3.2
B554060	60	97	15	40	64	64	105	86	3.6
B554085	85	115	15	40	64	64	105	86	4
B654072	72	110	18	40	73	70	120	98	5.5
B6550100	100	130	18	50	73	70	120	98	6.5
B756090	90	130	25	60	90	90	126	112	7.2
B554070	70	100	15	40	64	64	105	86	3.8

Non-standard B554070

抱紧式刀座
Clamping tool holder



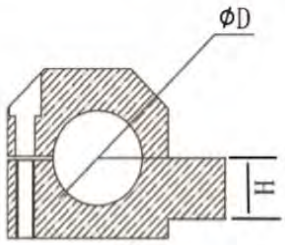

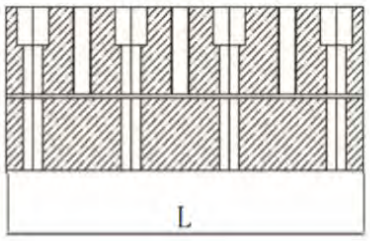

型号 Cat No	H	ΦD	L		型号 Cat No	H	ΦD	L
CTH20-32-140	20	32	140		CTH32-40-160	32	40	160
CTH25-16-100	25	16	100		CTH32-50-200	32	50	200
CTH25-20-100	25	20	100		CTH32-60-200	32	60	200
CTH25-25-100	25	25	100		CTH32-80-300	32	80	300
CTH25-32-140	25	32	140		CTH40-40-160	40	40	160
CTH25-40-160	25	40	160		CTH40-50-200	40	50	200
CTH25-50-200	25	50	200		CTH40-60-200	40	60	200
CTH25-60-200	25	60	200		CTH50-40-160	50	40	160
CTH32-20-80	32	20	80		CTH50-50-230	50	50	230
CTH32-25-120	32	250	120		CTH50-70-280	50	70	280
CTH32-32-150	32	32	150		CTH50-80-280	50	80	280

马扎克刀套
MAZAK Reduction sleeve




型号 Cat. No	外径 OD	内径 ID	型号 Cat. No	外径 OD	内径 ID	型号 Cat. No	外径 OD	内径 ID
MZ32-6	32	6	MZ32-8	32	8	MZ32-10	32	10
MZ32-12	32	12	MZ32-14	32	14	MZ32-16	32	16
MZ32-18	32	18	MZ32-20	32	20	MZ32-25	32	25
MZ40-6	40	6	MZ40-8	40	8	MZ40-10	40	10
MZ40-12	40	12	MZ40-14	40	14	MZ40-16	40	16
MZ40-18	40	18	MZ40-20	40	20	MZ40-25	40	25
MZ40-32	40	32						

油路刀套
Oil circuit guide sleeve


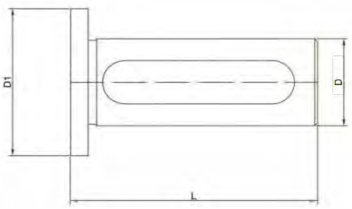

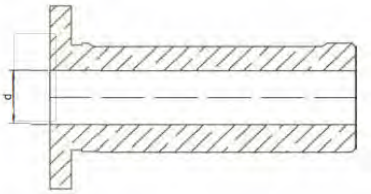

型号 Cat. No	d	D	D1	L
OSL25-20	20	25	41	60
OSL32-20	20	32	49	64
OSL32-25	25	32	49	64
OSL40-25	25	40	58	71
OSL40-32	32	40	58	71

辅助刀座
CNC lathe auxiliary tool holder



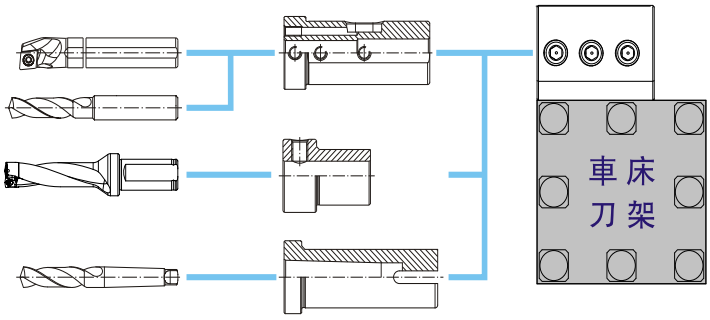

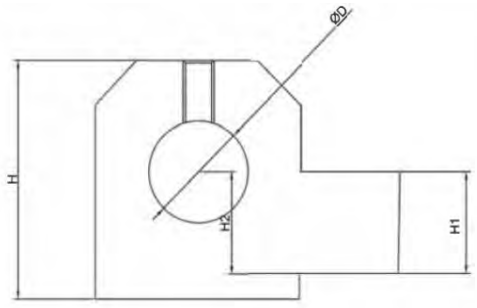

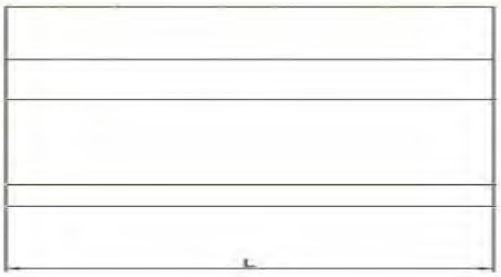

型号 Cat. No	H	H1	H2	ΦD	L
SBHA12-20	35	12	12	20	65
SBHA16-16	44	16	16	16	65
SBHA16-20	44	16	16	20	65
SBHA16-25	44	16	16	25	65
SBHA20-16	47	20	20	16	65
SBHA20-20	47	20	20	20	65
SBHA20-25	47	20	20	25	65
SBHA20-32	57	20	20	32	80
SBHA20-40	65	20	20	40	90
SBHA25-16	53	25	25	16	70
SBHA25-20	53	25	25	20	70
SBHA25-25	53	25	25	25	70
SBHA25-25-L	53	25	25	25	110
SBHA25-32	60	25	25	32	80
SBHA25-32-L	60	25	25	32	120
SBHA25-40	67	25	25	40	90
SBHA25-50	83	25	25	50	120
SBHA32-20	67	32	32	20	90
SBHA32-25	67	32	32	25	90
SBHA32-32	67	32	32	32	90
SBHA32-40	75	32	32	40	130
SBHA32-40-L	75	32	32	40	180
SBHA32-50	83	32	32	50	120
SBHA32-50-L	83	32	32	50	150
SBHA32-50-LL	83	32	32	50	180
SBHA32-60	95	32	32	60	180
SBHA40-32	84	40	40	32	150
SBHA40-40	90	40	40	40	130
SBHA40-50	93	40	40	50	130
SBHA40-60	95	40	40	60	180





用于四工位车床电动刀架，可配合装夹导套。
内径车刀、延长杆、麻花钻、U钻等刀具。
Used for four station lathe electric tool holder, can be fitted with clamp guide sleeve. Inside diameter turning tool, extension rod, twist drill, U drill and other tools.

延伸刀座
Four-station extension tool holder



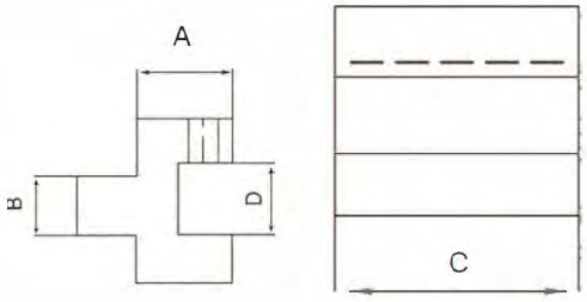

型号 Cat. No	A	B	C	D
FE202585	35	20	85	25
FE253085	45	25	85	30
FE3240100	62	32	100	40
FE3240150	62	32	100	40

双工位刀座
Double-station tool holder



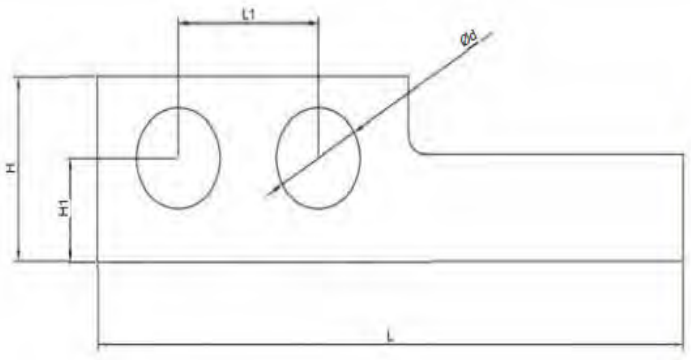

型号 Cat. No	H1	Φd	L	H	L
DT2020	20	20	50	40	150
DT2025	20	25	55	45	171
DT2520	25	20	55	45	171
DT2525	25	25	55	45	171

用于车床刀架一个刀位安装两把刀具使用，减少换刀省时省力 效率更高。
It is used to install two tools in one tool position of lathe tool rest, reducing tool change, saving time and labor and higher efficiency.

L型排刀座
L-shaped row tool holder

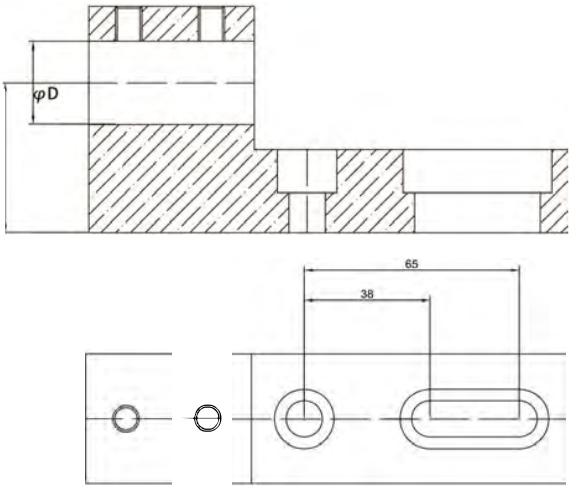



型号 Cat No	H	D
ZA-H40-16 PR38-65-M10	40	16
ZA-H45-16 PR38-65-M10	45	16
ZA-H50-16 PR38-65-M10	50	16
ZA-H55-16 PR38-65-M10	55	16
ZA-H56-16 PR38-65-M10	56	16
ZA-H60-16 PR38-65-M10	60	16
ZA-H63-16 PR38-65-M10	63	16
ZA-H65-16 PR38-65-M10	65	16
ZA-H70-16 PR38-65-M10	70	16
ZA-H40-20 PR38-65-M10	40	20
ZA-H45-20 PR38-65-M10	45	20
ZA-H50-20 PR38-65-M10	50	20
ZA-H55-20 PR38-65-M10	55	20
ZA-H56-20 PR38-65-M10	56	20
ZA-H60-20 PR38-65-M10	60	20
ZA-H63-20 PR38-65-M10	63	20
ZA-H65-20 PR38-65-M10	65	20
ZA-H70-20 PR38-65-M10	70	20

型号 Cat No	H	D
ZA-H40-25 PR38-65-M10	40	25
ZA-H45-25 PR38-65-M10	45	25
ZA-H50-25 PR38-65-M10	50	25
ZA-H55-25 PR38-65-M10	55	25
ZA-H56-25 PR38-65-M10	56	25
ZA-H60-25 PR38-65-M10	60	25
ZA-H63-25 PR38-65-M10	63	25
ZA-H65-25 PR38-65-M10	65	25
ZA-H70-25 PR38-65-M10	70	25
ZA-H80-25 PR38-65-M10	80	25
ZA-H45-32 PR38-65-M10	45	32
ZA-H50-32 PR38-65-M10	50	32
ZA-H55-32 PR38-65-M10	55	32
ZA-H56-32 PR38-65-M10	56	32
ZA-H60-32 PR38-65-M10	60	32
ZA-H63-32 PR38-65-M10	63	32
ZA-H65-32 PR38-65-M10	65	32
ZA-H70-32 PR38-65-M10	70	32
ZA-H80-32 PR38-65-M10	80	32

压块
Turning tool pressing block



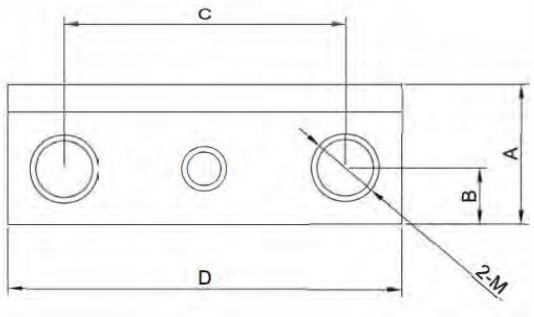

利用锲块压紧原理，可以牢固的压紧车刀。
Using the wedge pressing principle, you can firmly press the turning tool



抱紧式刀套
Clamping type tool sleeve



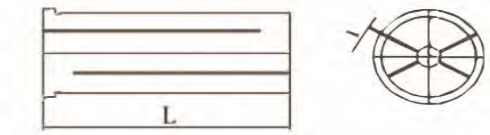

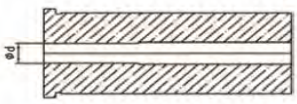

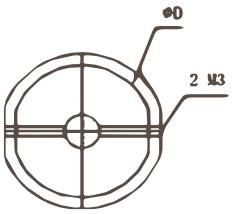

适用于抱紧式刀座内孔减径使用。
It is suitable for reducing the diameter of the inner hole of the holding tool block.

型号 Cat. No	ΦD	Φd	L
EF25	25	8-10-12-14-16-18-20	75
EF32	32	8-10-12-14-16-18-20-25	95
EF40	40	8-10-12-14-16-18-20-25-32	105
EF50	50	8-10-12-14-16-18-20-25-32-40	125
EF60	25	8-10-12-14-16-18-20-25-32-40-50	135

车床刀套
CNC lathe tool sleeve



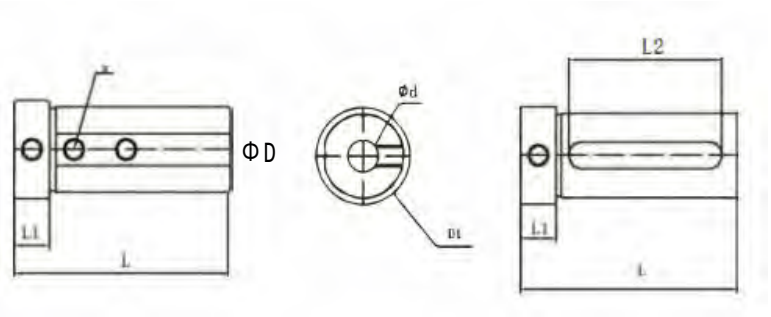

型号 Cat. No	ΦD	Φd	L	L1	L2	M
D16	16	4/5/6/7/8/7/8/9/10/12	65	10	40	M6
D20	20	4/5/6/7/8/9/10/11/12/13/14/15/16 MT1 MT2	65	11	45	M6
D25	25	4/5/6/7/8/9/10/11/12/13/14/15/16/17/18/20 MT1 MT2 MT3	70	11	49	M6
D32	32	4//6/8/10/12/14//16/18/20/22/25 MT1 MT2 MT3 MT4	65	11	45	M6
D40	40	4//6//8//10//12//14//16//18//20//22/24/25/30/32 MT1 MT2 MT3 MT4	100	14	73	M8
D50	50	6/8/10/12/14/16/18/20/22/25/30/32/40 MT1 MT2 MT3 MT4	100	14	73	M8
D60	60	16/18/20/22/25/32/40/50 MT1 MT2 MT3 MT4 MT5	120	14	91	M8

内冷导套
Internally cooled guide sleeve



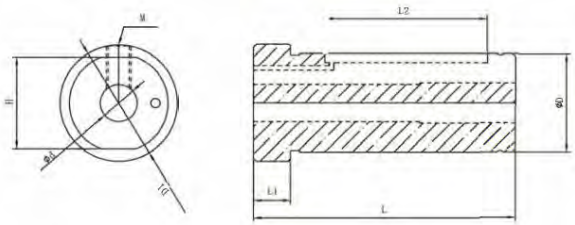

型号 Cat. No	ΦD	Φd	L	L1	L2	M
CD20	20	4/5/6/8	65	11	45	M6
CD25	25	4/5/6/8/10/12	70	11	49	M6
CD32	32	6/8/10/12/14/16	85	11	60	M6
CD40	40	6/8/10/12/14/16/18/20	100	14	73	M8
CD50	50	6/8/10/12/14/16/18/20/22/25/32	100	14	73	M8

硬质合金顶尖 CARBIDE CENTER



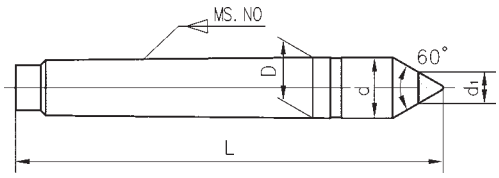

型号 Cat No.	MS.NO.	D mm	L mm	d mm	d_1 mm	重量 Wt(kg)	精度 Accuracy(mm)
DE1	MS1	12.065	80	12.2	8	0.057	0.010
DE2	MS2	17.780	100	18	8	0.151	
DE3	MS3	23.825	125	24.1	12	0.335	
DE4	MS4	31.267	160	31.6	15	0.746	
DE5	MS5	44.399	200	44.7	18	1.826	
DE6	MS6	63.348	270	63.8	24	5.230	
DE7	MS7	83.061	360	83.555	24	9.190	

伞形顶尖 BULL NOSE CENTER



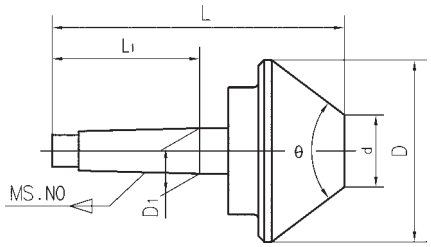

型号 Cat No.	MS.NO.	L	L1	D	D1	d	θ
DS2X60(60°)	MS2	132	64	60	17.780	20	60°
DS2X61.9(70°)	MS2	135	64	61.9	17.780	12.7	70°
DS3X76.2(70°)	MS3	152	81	76.2	23.825	19	70°
DS3X100(60°)	MS3	170	81	100	23.825	30	60°
DS3X100(75°)	MS3	164	81	100	23.825	32	75°
DS4X160(60°)	MS4	232	102.5	160	31.267	40	60°
DS4X160(75°)	MS4	225	102.5	160	31.267	35	75°
DS5X200(75°)	MS5	252	129.5	200	44.399	40	75°
DS5X250(75°)	MS5	281	129.5	250	44.399	57	75°
DS6X200(75°)	MS6	320	182	200	63.348	40	75°
DS6X250(75°)	MS6	355	182	250	63.348	57	75°

型精密回转顶尖 PRECISION LIVE CENTER



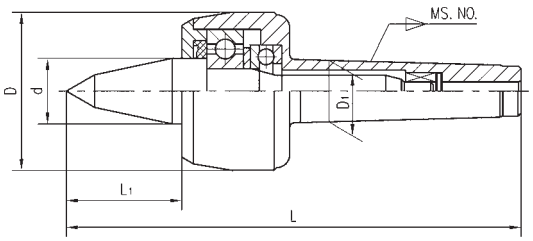

型号 Cat No.	MS. NO.	L mm	D mm	L1 mm	d mm	D1 mm	最大载荷(kg) Max Load	极限转速(rpm) Max Speed	精度(mm) Accuracy
M11/101	MS1	124	36	27	15	12.065	80	7000	0.01
M11/102	MS2	139	45	34	20	17.780	140	7000	0.005
M11/106	MS3	176.5	60	47	25	23.825	400	5000	0.005
M11/108	MS4	217	70	53	32	31.267	500	3800	0.005
M11/110	MS5	273	90	65	40	44.399	1200	3000	0.005
M11/114	MS6	354.5	105	78	50	63.348	2500	2600	0.01

型精密回转顶尖 PRECISION LIVE CENTER



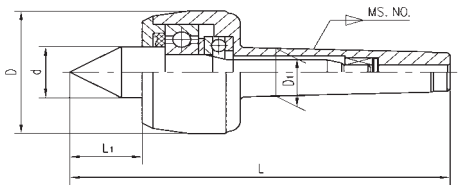

型号 Cat No.	MS. NO.	L mm	D mm	L1 mm	d mm	D1 mm	最大载荷(kg) Max Load	极限转速(rpm) Max Speed	精度(mm) Accuracy
604H/101	MS1	114	36	17	15	12.065	100	7000	0.010
604H/102	MS2	129	45	24	20	17.780	200	7000	0.005
604H/104	MS3	151.5	50	27.5	22	23.825	400	6300	0.005
604H/106	MS3	160.5	60	31	25	23.825	500	5000	0.005
604H/108	MS4	205	70	41	32	31.267	800	3800	0.005
604H/110	MS5	258.5	90	50.5	40	44.399	2000	3000	0.005
604H/114	MS6	334	105	57.5	50	63.348	3500	2600	0.010
604H/116	MS6	378	140	67	60	63.348	4500	1500	0.010
604H/116E	ME80	392	140	68	60	80	7500	1500	0.015

孔加工刀具
Boring tools

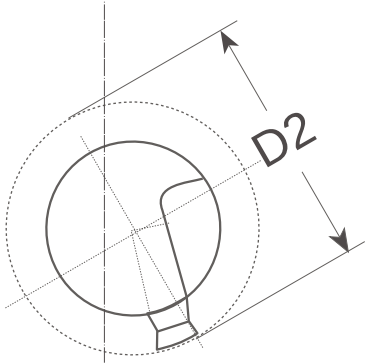



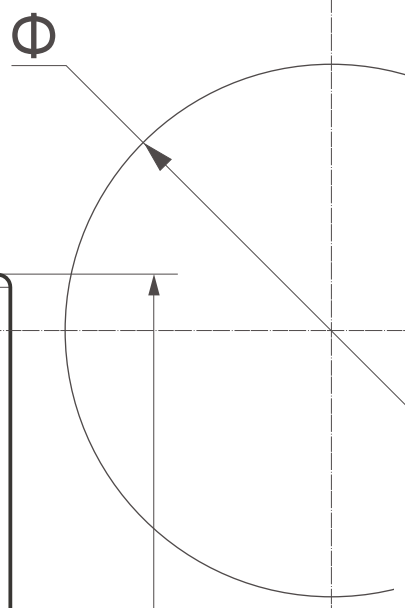

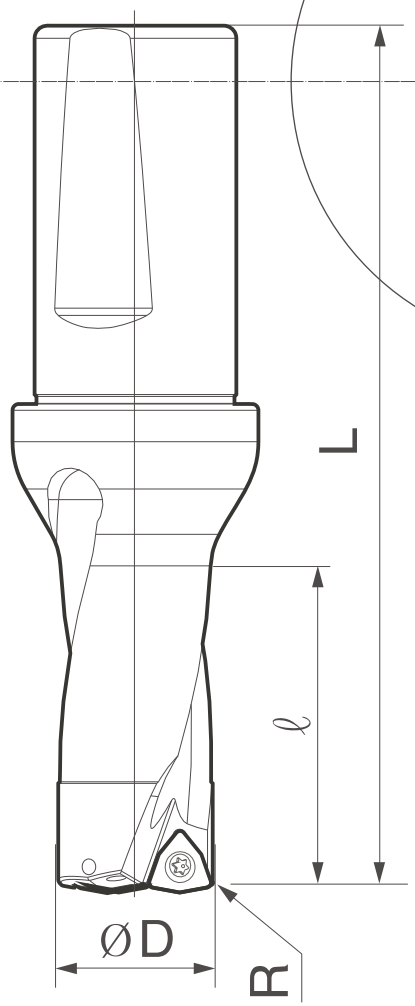



TDR快速钻头-2×D 加工范围Φ14-59mm

TDR disposable rapid drilling tools



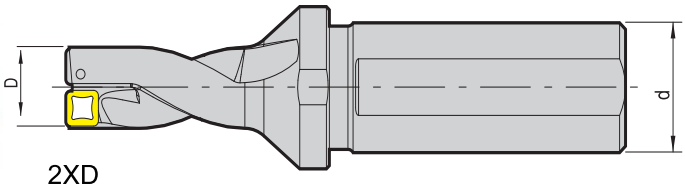

2XD

2XD

型号 Cat. No	尺寸 Size (mm) D	d	刀片 Applicable inserts	备件 螺钉 Clamp screw	扳手 Wrench
		25	SPMG050204	A2004QJ	T6F
TDR 2140–25T2–05	14				
TDR 2145–25T2–05	14.5				
TDR 2150–20T2–05	15				
TDR 2155–25T2–06	15.5	25	SPMG060204	A2205QJ	T7F
TDR 2160–25T2–06	16				
TDR 2165–25T2–06	16.5				
TDR 2170–25T2–06	17				
TDR 2175–25T2–06	17.5				
TDR 2180–25T2–06	18				
TDR 2185–25T2–06	18.5				
TDR 2190–25T2–06	19				
TDR 2195–25T2–06	19.5				
TDR 2200–25T2–06	20				
TDR 2205–25T2–06	20.5				
TDR 2210–25T2–06	21				
TDR 2215–25T2–06	21.5				
TDR 2220–25T2–07	22				
TDR 2225–25T2–07	22.5				
TDR 2225–32T2–07	22.5	32	SPMG07T308	A2506QJ	T8F
TDR 2230–25T2–07	23	25			
TDR 2230–32T2–07	23	32			
TDR 2235–25T2–07	23.5	25			
TDR 2235–32T2–07	23.5	32			
TDR 2240–25T2–07	24	25			
TDR 2240–32T2–07	24	32			
TDR 2245–25T2–07	24.5	25			
TDR 2245–32T2–07	24.5	32			
TDR 2250–25T2–07	25	25			
TDR 2250–32T2–07	25	32			
TDR 2255–25T2–07	25.5	25			
TDR 2255–32T2–07	25.5	32			
TDR 2260–25T2–07	26	25			
TDR 2260–32T2–07	26	32			
TDR 2265–25T2–07	26.5	25			
TDR 2265–32T2–07	26.5	32			
TDR 2270–25T2–07	27	25			
TDR 2270–32T2–07	27	32			
TDR 2275–25T2–07	27.5	25			
TDR 2275–32T2–07	27.5	32			
TDR 2280–25T2–09	28	25	SPMG090408	A3508QJ	T10F
TDR 2280–32T2–09	28	32			
TDR 2285–25T2–09	28.5	25			

型号 Cat. No	尺寸 Size (mm) D	d	刀片 Applicable inserts	备件 螺钉 Clamp screw	扳手 Wrench
TDR 2285–32T2–09	28.5	32	SPMG090408	A3508QJ	T10F
TDR 2290–25T2–09	29	25			
TDR 2290–32T2–09	29	32			
TDR 2295–32T2–09	29.5	32			
TDR 2295–40T2–09	29.5	40			
TDR 2300–32T2–09	30	32			
TDR 2300–40T2–09	30	40			
TDR 2305–32T2–09	30.5	32			
TDR 2305–40T2–09	30.5	40			
TDR 2310–32T2–09	31	32			
TDR 2310–40T2–09	31	40			
TDR 2315–32T2–09	31.5	32			
TDR 2315–40T2–09	31.5	40			
TDR 2320–32T2–09	32	32			
TDR 2320–40T2–09	32	40			
TDR 2325–32T2–09	32.5	32			
TDR 2325–40T2–09	32.5	40			
TDR 2330–32T2–09	33	32			
TDR 2330–40T2–09	33	40			
TDR 2340–32T2–11	34	32	SPMG110408	A4009QJ	T15F
TDR 2340–40T2–11	34	40			
TDR 2350–32T2–11	35	32			
TDR 2350–40T2–11	35	40			
TDR 2360–32T2–11	36	32			
TDR 2360–40T2–11	36	40			
TDR 2370–32T2–11	37	32			
TDR 2370–40T2–11	37	40			
TDR 2380–32T2–11	38	32			
TDR 2380–40T2–11	38	40			
TDR 2390–32T2–11	39	32			
TDR 2390–40T2–11	39	40			
TDR 2400–32T2–11	40	32			
TDR 2400–40T2–11	40	40	SPMG140512	A5009QJ	T20F
TDR 2410–40T2–11	41				
TDR 2420–40T2–14	42				
TDR 2430–40T2–14	43				
TDR 2440–40T2–14	44				
TDR 2450–40T2–14	45				
TDR 2460–40T2–14	46				
TDR 2470–40T2–14	47				
TDR 2480–40T2–14	48				
TDR 2490–40T2–14	49				
TDR 2500–40T2–14	50				
TDR 2510–40T2–14	51				
TDR 2520–40T2–14	52				
TDR 2530–40T2–14	53				
TDR 2540–40T2–14	54				
TDR 2550–40T2–14	55				
TDR 2560–40T2–14	56				
TDR 2570–40T2–14	57				
TDR 2580–40T2–14	58				
TDR 2590–40T2–14	59				

TDR快速钻头-3×D 加工范围Φ12.5-50mm

TDR disposable rapid drilling tools



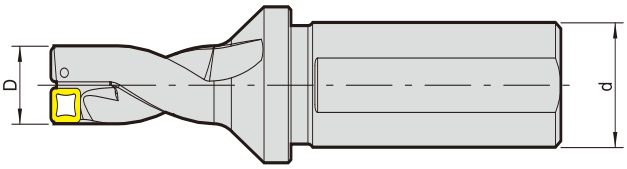

3XD

型号 Cat. No	尺寸 Size (mm) D	d	刀片 Applicable inserts	备件 螺钉 Clamp screw	扳手 Wrench
TDR 3125-20T2-05	12.5	20	SPMG050204	A2004OJ	T6F
TDR 3130-20T2-05	13				
TDR 3135-20T2-05	13.5				
TDR 3140-20T2-05	14				
TDR 3145-20T2-05	14.5				
TDR 3150-20T2-05	15				
TDR 3155-25T2-06	15.5	25	SPMG060204	A2205OJ	T7F
TDR 3160-25T2-06	16				
TDR 3165-25T2-06	16.5				
TDR 3170-25T2-06	17				
TDR 3175-25T2-06	17.5				
TDR 3180-25T2-06	18				
TDR 3185-25T2-06	18.5				
TDR 3190-25T2-06	19				
TDR 3195-25T2-06	19.5				
TDR 3200-25T2-06	20				
TDR 3205-25T2-06	20.5				
TDR 3209-25T2-06	20.9				
TDR 3210-25T2-06	21				
TDR 3215-25T2-06	21.5				
TDR 3220-25T2-07	22		SPMG07T308	A2506OJ	T8F
TDR 3225-25T2-07	22.5				
TDR 3225-32T2-07	22.5	32			
TDR 3230-25T2-07	23	25			
TDR 3230-32T2-07	23	32			
TDR 3235-25T2-07	23.5	25			
TDR 3235-32T2-07	23.5	32			
TDR 3239-25T2-07	23.9	25			
TDR 3239-32T2-07	23.9	32			
TDR 3240-25T2-07	24	25			
TDR 3240-32T2-07	24	32			
TDR 3245-25T2-07	24.5	25			
TDR 3245-32T2-07	24.5	32			
TDR 3250-25T2-07	25	25			
TDR 3250-32T2-07	25	32			
TDR 3255-25T2-07	25.5	25			
TDR 3255-32T2-07	25.5	32			
TDR 3260-25T2-07	26	25			
TDR 3260-32T2-07	26	32			
TDR 3264-25T2-07	26.4	25			
TDR 3264-32T2-07	26.4	32			
TDR 3265-25T2-07	26.5	25			
TDR 3265-32T2-07	26.5	32			
TDR 3270-25T2-07	27	25			
TDR 3270-32T2-07	27	32			
TDR 3275-25T2-07	27.5	25			
TDR 3275-32T2-07	27.5	32			
TDR 3280-25T2-09	28	25	SPMG090408	A3508OJ	T10F
TDR 3280-32T2-09	28	32			
TDR 3285-25T2-09	28.5	25			

3XD

型号 Cat. No	尺寸 Size (mm) D	d	刀片 Applicable inserts	备件 螺钉 Clamp screw	扳手 Wrench
TDR 3285-32T2-09	28.5	32	SPMG090408	A3508OJ	T10F
TDR 3290-25T2-09	29	25			
TDR 3290-32T2-09	29	32			
TDR 3294-25T2-09	29.4	25			
TDR 3294-32T2-09	29.4	32			
TDR 3295-32T2-09	29.5	32			
TDR 3295-40T2-09	29.5	40			
TDR 3300-32T2-09	30	32			
TDR 3300-40T2-09	30	40			
TDR 3305-32T2-09	30.5	32			
TDR 3305-40T2-09	30.5	40			
TDR 3310-32T2-09	31	32			
TDR 3310-40T2-09	31	40			
TDR 3315-32T2-09	31.5	32			
TDR 3315-40T2-09	31.5	40			
TDR 3320-32T2-09	32	32			
TDR 3320-40T2-09	32	40			
TDR 3325-32T2-09	32.5	32			
TDR 3325-40T2-09	32.5	40			
TDR 3330-32T2-09	33	32			
TDR 3330-40T2-09	33	40			
TDR 3340-32T2-11	34	32	SPMG110408	A4009OJ	T15F
TDR 3340-40T2-11	34	40			
TDR 3350-32T2-11	35	32			
TDR 3350-40T2-11	35	40			
TDR 3360-32T2-11	36	32			
TDR 3360-40T2-11	36	40			
TDR 3370-32T2-11	37	32			
TDR 3370-40T2-11	37	40			
TDR 3375-32T2-11	37.5	32			
TDR 3375-40T2-11	37.5	40			
TDR 3380-32T2-11	38	32			
TDR 3380-40T2-11	38	40			
TDR 3390-32T2-11	39	32			
TDR 3390-40T2-11	39	40			
TDR 3400-32T2-11	40	32			
TDR 3400-40T2-11	40	40	SPMG140512	A5009OJ	T20F
TDR 3405-40T2-11	40.5				
TDR 3410-40T2-11	41				
TDR 3420-40T2-14	42				
TDR 3430-40T2-14	43				
TDR 3440-40T2-14	44				
TDR 3450-40T2-14	45				
TDR 3460-40T2-14	46				
TDR 3470-40T2-14	47				
TDR 3480-40T2-14	48				
TDR 3490-40T2-14	49				
TDR 3500-40T2-14	50				

NBD PRECISION TOOL

TDR快速钻头-4×D 加工范围Φ14-50mm

TDR disposable rapid drilling tools



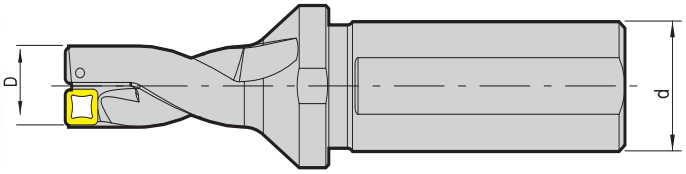

4XD

型号 Cat. No	尺寸 Size (mm) D	d	刀片 Applicable inserts	备件 螺钉 Clamp screw	扳手 Wrench
		20	SPMG050204	A20040J	T6F
TDR 4140–20T2–05	14				
TDR 4145–20T2–05	14.5				
TDR 4150–20T2–05	15				
TDR 4155–25T2–06	15.5	25	SPMG060204	A22050J	T7F
TDR 4160–25T2–06	16				
TDR 4165–25T2–06	16.5				
TDR 4170–25T2–06	17				
TDR 4175–25T2–06	17.5				
TDR 4180–25T2–06	18				
TDR 4185–25T2–06	18.5				
TDR 4190–25T2–06	19				
TDR 4195–25T2–06	19.5				
TDR 4200–25T2–06	20				
TDR 4205–25T2–06	20.5				
TDR 4210–25T2–06	21				
TDR 4215–25T2–06	21.5				
TDR 4220–25T2–07	22		SPMG07T308	A25060J	T8F
TDR 4225–25T2–07	22.5				
TDR 4225–32T2–07	22.5	32			
TDR 4230–25T2–07	23	25			
TDR 4230–32T2–07	23	32			
TDR 4235–25T2–07	23.5	25			
TDR 4235–32T2–07	23.5	32			
TDR 4240–25T2–07	24	25			
TDR 4240–32T2–07	24	32			
TDR 4245–25T2–07	24.5	25			
TDR 4245–32T2–07	24.5	32			
TDR 4250–25T2–07	25	25			
TDR 4250–32T2–07	25	32			
TDR 4255–25T2–07	25.5	25			
TDR 4255–32T2–07	25.5	32			
TDR 4260–25T2–07	26	25			
TDR 4260–32T2–07	26	32			
TDR 4265–25T2–07	26.5	25			
TDR 4265–32T2–07	26.5	32			
TDR 4270–25T2–07	27	25			
TDR 4270–32T2–07	27	32			
TDR 4275–25T2–07	27.5	25			
TDR 4275–32T2–07	27.5	32			
TDR 4280–25T2–09	28	25	SPMG090408	A35080J	T10F
TDR 4280–32T2–09	28	32			
TDR 4285–25T2–09	28.5	25			

4XD

型号 Cat. No	尺寸 Size (mm) D	d	刀片 Applicable inserts	备件 螺钉 Clamp screw	扳手 Wrench
TDR 4285–32T2–09	28.5	32	SPMG090408	A35080J	T10F
TDR 4290–25T2–09	29	25			
TDR 4290–32T2–09	29	32			
TDR 4295–32T2–09	29.5	32			
TDR 4295–40T2–09	29.5	40			
TDR 4300–32T2–09	30	32			
TDR 4300–40T2–09	30	40			
TDR 4305–32T2–09	30.5	32			
TDR 4305–40T2–09	30.5	40			
TDR 4310–32T2–09	31	32			
TDR 4310–40T2–09	31	40			
TDR 4315–32T2–09	31.5	32			
TDR 4315–40T2–09	31.5	40			
TDR 4320–32T2–09	32	32			
TDR 4320–40T2–09	32	40			
TDR 4325–32T2–09	32.5	32			
TDR 4325–40T2–09	32.5	40			
TDR 4330–32T2–09	33	32			
TDR 4330–40T2–09	33	40			
TDR 4340–32T2–11	34	32	SPMG110408	A40090J	T15F
TDR 4340–40T2–11	34	40			
TDR 4350–32T2–11	35	32			
TDR 4350–40T2–11	35	40			
TDR 4360–32T2–11	36	32			
TDR 4360–40T2–11	36	40			
TDR 4370–32T2–11	37	32			
TDR 4370–40T2–11	37	40			
TDR 4380–32T2–11	38	32			
TDR 4380–40T2–11	38	40			
TDR 4390–32T2–11	39	32			
TDR 4390–40T2–11	39	40			
TDR 4400–32T2–11	40	32			
TDR 4400–40T2–11	40	40			
TDR 4410–40T2–11	41				
TDR 4420–40T2–14	42		SPMG140512	A50090J	T20F
TDR 4430–40T2–14	43				
TDR 4440–40T2–14	44				
TDR 4450–40T2–14	45				
TDR 4460–40T2–14	46				
TDR 4470–40T2–14	47				
TDR 4480–40T2–14	48				
TDR 4490–40T2–14	49				
TDR 4500–40T2–14	50				

QSD快速钻头-2×D　　加工范围Φ16-80mm
QSD disposable rapid drilling tools



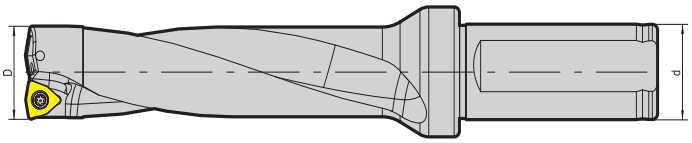

2XD

型号 Cat. No	尺寸 Size (mm) D	d	刀片 Applicable inserts	备件 螺钉 Clamp screw	扳手 Wrench
QSD16–32–C20	16	20	WCMX030208R (2pcs)	A25065G	T8F
QSD16.5–33–C20	16.5				
QSD17–34–C20	17				
QSD17.5–35–C20	17.5				
QSD18–36–C25	18	25			
QSD18.5–37–C25	18.5				
QSD19–38–C25	19				
QSD19.5–39–C25	19.5				
QSD20–40–C25	20		WCMX040208R (2pcs)		
QSD20.5–41–C25	20.5				
QSD21–42–C25	21				
QSD21.5–43–C25	21.5				
QSD22–44–C25	22				
QSD22.5–45–C25	22.5				
QSD23–46–C25	23				
QSD23.5–47–C25	23.5				
QSD24–48–C25	24				
QSD24.5–49–C25	24.5				
QSD25–50–C25	25				
QSD25.5–51–C32	25.5	32	WCMX050308R (2pcs)	A30070G	T10F
QSD26–52–C32	26				
QSD27–54–C32	27				
QSD28–56–C32	28				
QSD29–58–C32	29				
QSD30–60–C32	30				
QSD31–62–C32	31				
QSD32–64–C32	32				
QSD33–66–C40	33	40	WCMX06T308R (2pcs)	A35100F	T15F
QSD34–68–C40	34				
QSD35–70–C40	35				
QSD36–72–C40	36				
QSD37–74–C40	37				
QSD38–76–C40	38				
QSD39–78–C40	39				
QSD40–80–C40	40				
QSD41–82–C40	41		WCMX080412R (2pcs)	A40090G	
QSD42–84–C40	42				
QSD43–86–C40	43				

2XD

型号 Cat. No	尺寸 Size (mm) D	d	刀片 Applicable inserts	备件 螺钉 Clamp screw	扳手 Wrench
QSD44–88–C40	44	40	WCMX080412R (2pcs)	A40090G	T15F
QSD45–90–C40	45				
QSD46–92–C40	46				
QSD47–94–C40	47				
QSD48–96–C40	48				
QSD49–98–C40	49				
QSD50–100–C50	50	50			
QSD51–102–C50	51				
QSD52–104–C50	52				
QSD53–106–C50	53				
QSD54–108–C50	54				
QSD55–110–C50	55				
QSD56–112–C50	56				
QSD57–114–C50	57				
QSD58–116–C50	58				
QSD59–118–C50	59				
QSD60–120–C50	60		WCMX06T308R (4pcs)	A35100F	
QSD61–122–C50	61				
QSD62–124–C50	62				
QSD63–126–C50	63				
QSD64–128–C50	64				
QSD65–130–C50	65				
QSD66–132–C50	66				
QSD67–134–C50	67				
QSD68–136–C50	68				
QSD69–138–C50	69				
QSD70–140–C50	70				
QSD71–142–C50	71				
QSD72–144–C50	72				
QSD73–146–C50	73				
QSD74–148–C50	74				
QSD75–150–C50	75				
QSD76–152–C50	76				
QSD77–154–C50	77				
QSD78–156–C50	78				
QSD79–158–C50	79				
QSD80–160–C50	80				

QSD快速钻头-3×D　　加工范围Φ16-87mm

QSD disposable rapid drilling tools



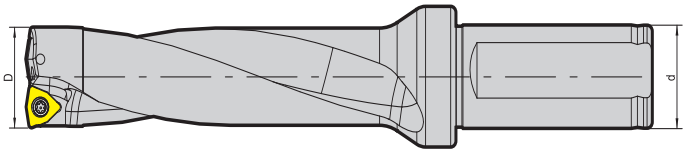

3XD

型号 Cat. No	尺寸 Size (mm)		刀片 Applicable inserts	备件	
	D	d		螺钉 Clamp screw	扳手 Wrench
QSD16–48–C20	16	20	WCMX030208R (2pcs)	A25065G	T8F
QSD16.5–50–C20	16.5				
QSD17–51–C20	17				
QSD17.5–53–C20	17.5				
QSD18–54–C25	18	25			
QSD18.5–56–C25	18.5				
QSD19–57–C25	19				
QSD19.5–59–C25	19.5				
QSD20–60–C25	20		WCMX040208R (2pcs)		
QSD20.5–62–C25	20.5				
QSD21–63–C25	21				
QSD21.5–65–C25	21.5				
QSD22–66–C25	22				
QSD22.5–68–C25	22.5				
QSD23–69–C25	23				
QSD23.5–71–C25	23.5				
QSD24–72–C25	24				
QSD24.5–74–C25	24.5				
QSD25–75–C25	25				
QSD25.5–77–C32	25.5	32	WCMX050308R (2pcs)	A30070G	T10F
QSD26–78–C32	26				
QSD27–81–C32	27				
QSD28–84–C32	28				
QSD29–87–C32	29				
QSD30–90–C32	30				
QSD31–93–C32	31				
QSD32–96–C32	32				
QSD33–99–C40	33	40	WCMX06T308R (2pcs)	A35100F	T15F
QSD34–102–C40	34				
QSD35–105–C40	35				
QSD36–108–C40	36				
QSD37–111–C40	37				
QSD38–114–C40	38				
QSD39–117–C40	39				
QSD40–120–C40	40				
QSD41–123–C40	41		WCMX080412R (2pcs)	A40090G	
QSD42–126–C40	42				
QSD43–129–C40	43				

3XD

型号 Cat. No	尺寸 Size (mm)		刀片 Applicable inserts	备件	
	D	d		螺钉 Clamp screw	扳手 Wrenc
QSD44–132–C40	44	40	WCMX080412R (2pcs)	A40090G	T15F
QSD45–135–C40	45				
QSD46–138–C40	46				
QSD47–141–C40	47				
QSD48–144–C40	48				
QSD49–147–C40	49				
QSD50–150–C50	50	50			
QSD51–153–C50	51				
QSD52–156–C50	52				
QSD53–159–C50	53				
QSD54–162–C50	54				
QSD55–165–C50	55				
QSD56–168–C50	56				
QSD57–171–C50	57				
QSD58–174–C50	58				
QSD59–177–C50	59				
QSD60–180–C50	60		WCMX06T308R (4pcs)	A35100F	
QSD61–183–C50	61				
QSD62–186–C50	62				
QSD63–189–C50	63				
QSD64–192–C50	64				
QSD65–195–C50	65				
QSD66–198–C50	66				
QSD67–201–C50	67				
QSD68–204–C50	68				
QSD69–207–C50	69				
QSD70–210–C50	70				
QSD71–213–C50	71				
QSD72–216–C50	72				
QSD73–219–C50	73				
QSD74–222–C50	74				
QSD75–225–C50	75				
QSD76–228–C50	76				
QSD77–231–C50	77				
QSD78–234–C50	78				
QSD79–237–C50	79				
QSD80–240–C50	80				
QSD87–261–C50	87		WCMX080412R(4pcs)	A40090G	

QSD快速钻头-4×D　　加工范围Φ16-80mm

QSD disposable rapid drilling tools



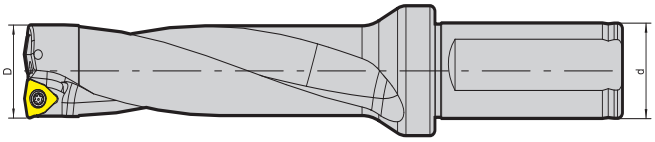

4XD

型号 Cat. No	尺寸 Size (mm) D	d	刀片 Applicable inserts	备件 螺钉 Clamp screw	扳手 Wrench
QSD16–64–C20	16	20	WCMX030208R (2pcs)	A25065G	T8F
QSD16.5–66–C20	16.5				
QSD17–68–C20	17				
QSD17.5–70–C20	17.5				
QSD18–72–C25	18	25			
QSD18.5–74–C25	18.5				
QSD19–76–C25	19				
QSD19.5–78–C25	19.5				
QSD20–80–C25	20		WCMX040208R (2pcs)		
QSD20.5–82–C25	20.5				
QSD21–84–C25	21				
QSD21.5–86–C25	21.5				
QSD22–88–C25	22				
QSD22.5–90–C25	22.5				
QSD23–92–C25	23				
QSD23.5–94–C25	23.5				
QSD24–96–C25	24				
QSD24.5–98–C25	24.5				
QSD25–100–C25	25				
QSD25.5–102–C32	25.5	32	WCMX050308R (2pcs)	A30070G	T10F
QSD26–104–C32	26				
QSD27–108–C32	27				
QSD28–112–C32	28				
QSD29–116–C32	29				
QSD30–120–C32	30				
QSD31–124–C32	31				
QSD32–128–C32	32				
QSD33–132–C40	33	40	WCMX06T308R (2pcs)	A35100F	T15F
QSD34–136–C40	34				
QSD35–140–C40	35				
QSD36–144–C40	36				
QSD37–148–C40	37				
QSD38–152–C40	38				
QSD39–156–C40	39				
QSD40–160–C40	40				
QSD41–164–C40	41		WCMX080412R (2pcs)	A40090G	
QSD42–168–C40	42				
QSD43–172–C40	43				

4XD

型号 Cat. No	尺寸 Size (mm) D	d	刀片 Applicable inserts	备件 螺钉 Clamp screw	扳手 Wrench
QSD44–176–C40	44	40	WCMX080412R (2pcs)	A40090G	T15F
QSD45–180–C40	45				
QSD46–184–C40	46				
QSD47–188–C40	47				
QSD48–192–C40	48				
QSD49–196–C40	49				
QSD50–200–C50	50	50			
QSD51–204–C50	51				
QSD52–208–C50	52				
QSD53–212–C50	53				
QSD54–216–C50	54				
QSD55–220–C50	55				
QSD56–224–C50	56				
QSD57–228–C50	57				
QSD58–232–C50	58				
QSD59–236–C50	59				
QSD60–240–C50	60		WCMX06T308R (4pcs)	A35100F	
QSD61–244–C50	61				
QSD62–248–C50	62				
QSD63–252–C50	63				
QSD64–256–C50	64				
QSD65–260–C50	65				
QSD66–264–C50	66				
QSD67–268–C50	67				
QSD68–272–C50	68				
QSD69–276–C50	69				
QSD70–280–C50	70				
QSD71–284–C50	71				
QSD72–288–C50	72				
QSD73–292–C50	73				
QSD74–296–C50	74				
QSD75–300–C50	75				
QSD76–304–C50	76				
QSD77–308–C50	77				
QSD78–312–C50	78				
QSD79–316–C50	79				
QSD80–320–C50	80				

QSD快速钻头-5×D　　加工范围Φ16-43mm

QSD disposable rapid drilling tools



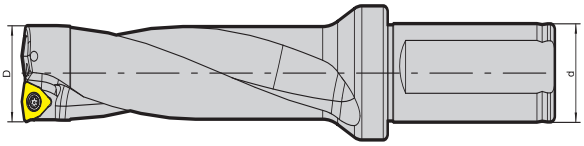

5XD

型号 Cat. No	尺寸 Size (mm)		刀片 Applicable inserts	备件	
	D	d		螺钉 Clamp screw	扳手 Wrench
QSD16–80–C20	16	20	WCMX030208R (2pcs)	A25065G	T8F
QSD16.5–83–C20	16.5				
QSD17–85–C20	17				
QSD17.5–88–C20	17.5				
QSD18–90–C25	18	25			
QSD18.5–93–C25	18.5				
QSD19–95–C25	19				
QSD19.5–98–C25	19.5				
QSD20–100–C25	20		WCMX040208R (2pcs)		
QSD20.5–103–C25	20.5				
QSD21–105–C25	21				
QSD21.5–108–C25	21.5				
QSD22–110–C25	22				
QSD22.5–113–C25	22.5				
QSD23–115–C25	23				
QSD23.5–115–C25	23.5				
QSD24–120–C25	24				
QSD24.5–123–C25	24.5				
QSD25–125–C25	25				
QSD25.5–128–C32	25.5	32	WCMX050308R (2pcs)	A30070G	T10F
QSD26–130–C32	26				
QSD27–135–C32	27				
QSD28–140–C32	28				
QSD29–145–C32	29				
QSD30–150–C32	30				
QSD31–155–C32	31				
QSD32–160–C32	32				
QSD33–165–C40	33	40	WCMX06T308R (2pcs)	A35100F	T15F
QSD34–170–C40	34				
QSD35–175–C40	35				
QSD36–180–C40	36				
QSD37–185–C40	37				
QSD38–190–C40	38				
QSD39–195–C40	39				
QSD40–200–C40	40				
QSD41–205–C40	41		WCMX080412R (2pcs)	A40090G	
QSD42–210–C40	42				
QSD43–215–C40	43				

Modular Drill

皇冠钻
孔加工-模块化钻

Modular Drill



优点和特点
Advantages and characteristics

- 支持快进给钻孔加工,确保高生产率水平.
Support fast feed drilling processing to ensure a high level of productivity.
- 低钻入力,可避免工件出现弯曲现象.
Low drilling force can avoid the bending of the workpiece.
- 即使深腔加工，也能保证良好的精度.
Even in deep cavity processing, good accuracy can be guaranteed.
- 皇冠钻(模块化钻)具有直径更大,有效长更长的特点.
Modular drills have the characteristics of larger diameter and longer effective length.

加工方式
Processing mode



刀片信息
Blade information



- 皇冠钻尖可以进行修磨二次使用,从而提高经济性.
The crown drill tip can be reground for secondary use, thereby improving economy.
- 整体硬质合金的刀片提供了更多的选择性.
Monolithic carbide inserts offer more options.
- 直径12.5mm至40mm,间隔0.1mm一个规格.
From a diameter of 12.5mm to 40mm, with an interval of 0.01mm for each specification.
- 高效率的孔加工可省去粗镗工艺,一次成型.
High-efficiency hole processing can eliminate the rough boring process and be formed in one time.

精度与效率并重

Both precision and efficiency are emphasized.

皇冠钻切削性能深度解析

In-depth Analysis of the Cutting Performance of Crown Drills

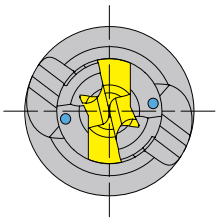

1 切削效率比较 Comparison of cutting efficiency (KSΦ20-7D)

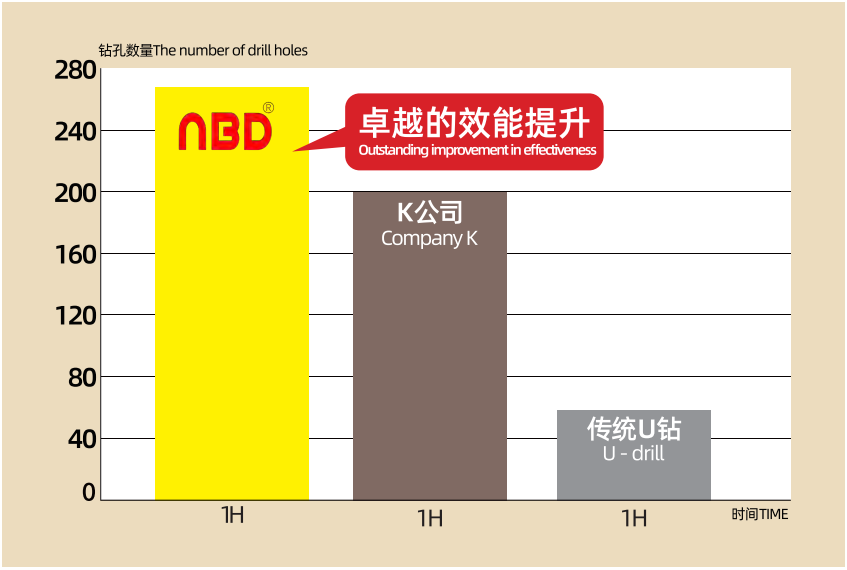

NBD
K公司 Company K
传统U钻 U - drill

被加工材料:45#
The material being processed

- 加工设备:立式加工中心 Machine Vertical MC
- 刀具直径:Φ20-7D Tool dia
- 切削参数: cutting conditions
  转速S:2000
  进给F:400
- 加工孔深: Drilling depth
  H=100MM通孔
- 冷却方式:内冷 Coolant Internal cooling

2 刀具寿命比较 Comparison of Tool Life (KSΦ20-7D)

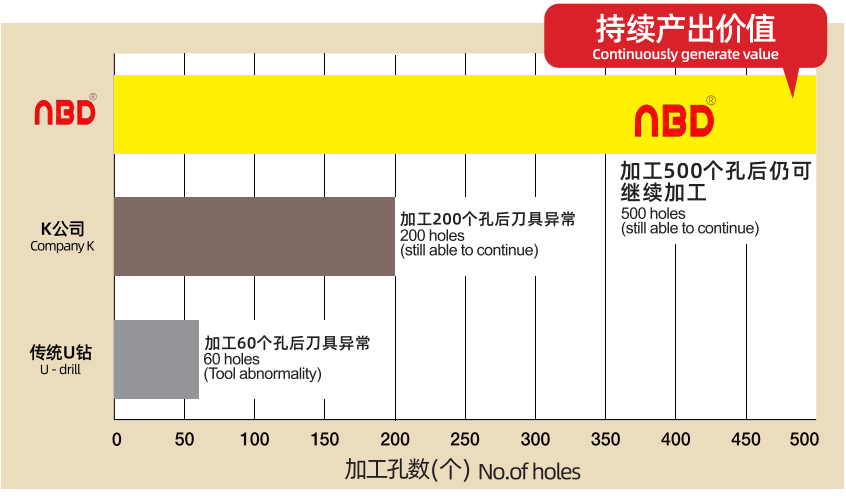

被加工材料:45#
The material being processed

- 加工设备:立式加工中心 Machine Vertical MC
- 刀具直径:Φ20-7D Tool dia
- 切削参数: cutting conditions
  转速S:2000
  进给F:400
- 加工孔深: Drilling depth
  H=100MM通孔
- 冷却方式:内冷 Coolant Internal cooling

3 切削阻力比较 Comparison of Cutting Resistance (KSΦ20-7D)

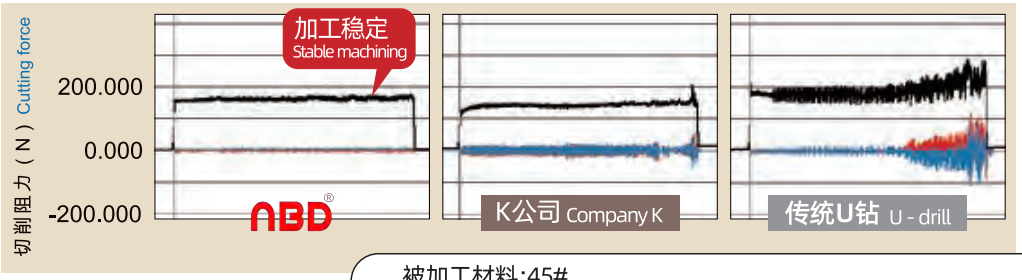

被加工材料:45#
The material being processed

- 加工设备:立式加工中心 Machine Vertical MC
- 刀具直径:Φ20-7D Tool dia
- 切削参数: cutting conditions 转速S:2000 进给F:400
- 加工孔深: Drilling depth H=100MM通孔
- 冷却方式:内冷 Coolant Internal cooling

4 孔精度 Hole accuracy (KSΦ20-7D)



被加工材料:45#
The material being processed

- 加工设备:立式加工中心 Machine Vertical MC
- 刀具直径:Φ20-7D Tool dia
- 切削参数: cutting conditions 转速S:2000 进给F:400
- 加工孔深: Drilling depth H=100MM通孔
- 冷却方式:内冷 Coolant Internal cooling

孔精度 Hole accuracy



使用Φ20的钻头,孔径精度在10μm以内,精度良好!
Using a drill bit with a diameter of Φ20, the accuracy of the hole diameter is within 10 micrometers, and the accuracy is excellent!

通孔加工 Hole accuracy

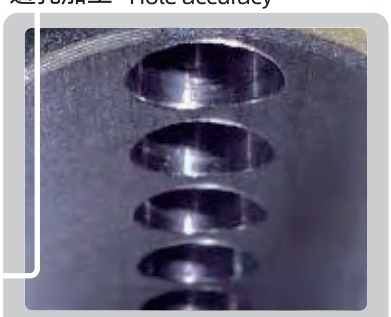

通孔加工亦毫无问题!
Through-hole machining

极佳的夹持设计
Excellent clamping design

后拉式锁紧装置可避免刀片脱离
The rear-pull type locking device can prevent the blade from detaching.

更大的支承面可确保大扭矩的安全传输，并不会导致刀座变形
A larger bearing surface can ensure the safe transmission of large torque and will not cause the deformation of the tool holder.

更大的接触面
a larger contact surface.



后拉式锁紧装置
Rear-pull type locking device

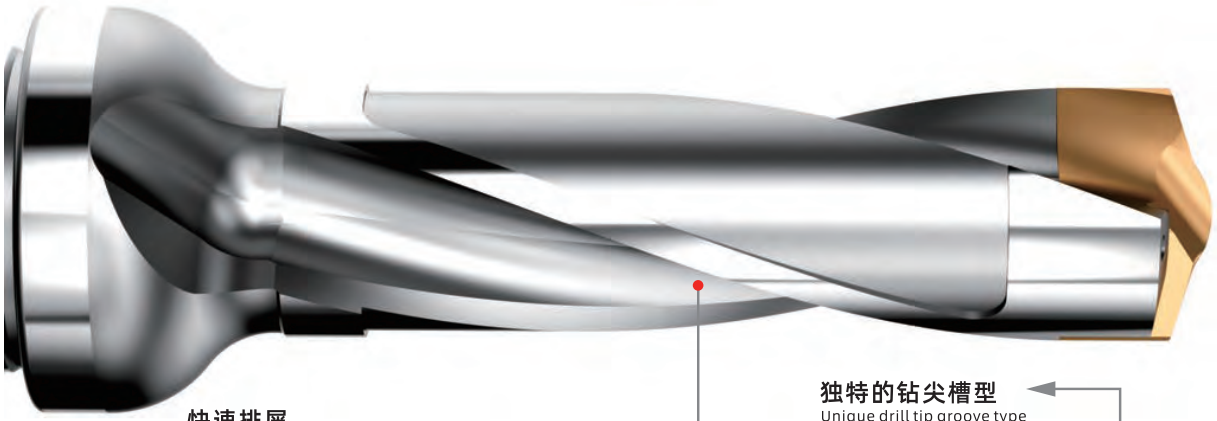

快速排屑
Rapid chip removal

大面积,高精度排屑槽可确保顺畅的排屑.从而延长刀具寿命,改善刀具性能.
The large-area and high-precision chip removal grooves can ensure smooth chip removal. Thus, the tool life is prolonged and the tool performance is improved.

独特的钻尖槽型
Unique drill tip groove type

自定心钻尖设计确保卓越的孔加工精度,以及优化的刀具性能
The self-centering drill point design ensures excellent hole machining accuracy and optimized tool performance.



NBD®
PRECISION TOOL



皇冠钻钻孔铁屑

对比 / VS



U钻钻孔铁屑

皇冠钻 Modular Drill

通常是对称设计的双刃刀具，双刃同时切削，在切削过程中产生的切屑更容易被分割和控制，使切屑的形状和大小更易于实现断屑.

It is usually a double - edged tool with a symmetrical design. The two edges cut simultaneously. During the cutting process, the chips generated are more easily segmented and controlled. This makes it easier to break the chips in terms of their shape and size.

U钻 U - drill

属于非对称设计的单刃刀具，中心刀片和外周刀片的组合在断屑控制上相对复杂一些，单刃切削产生的切屑连贯性可能更强，不利于断屑.

It is a single - edged tool with an asymmetrical design. The combination of the central insert and the outer - circumference insert makes chip - breaking control relatively more complex. The chips generated by single - edge cutting may have stronger continuity, which is not conducive to chip - breaking.

安装指导 /Installation guidance



1 将螺丝固定刀坐标T处.
Fix the screw at coordinate T of the knife.



2 指尖微扶刀片,开始顺时针旋转扳手,将皇冠钻尖与底部完全接触.
Gently hold the blade with your fingertip and start to rotate the wrench clockwise to make the crown drill tip fully contact the bottom.

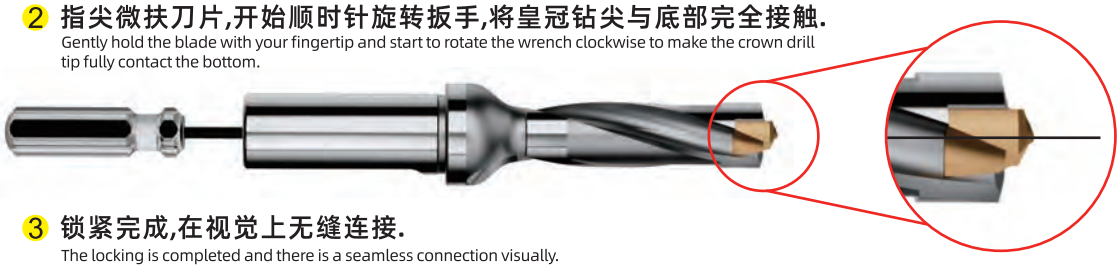

3 锁紧完成,在视觉上无缝连接.
The locking is completed and there is a seamless connection visually.

提供刀具修磨服务

Provide tool grinding service

刀片磨损后可参与我们的回收服务计划,进行刀片修磨,降低成本.修磨后的刀片与新刀片表现同样稳定,一致的性能.

After the blade wears out, you can participate in our recycling service plan. We offer blade grinding to reduce costs. The ground blades perform as stably and consistently as new ones.



皇冠钻刀片规格

Specifications of Crown Drill insert

注：每隔0.01MM为一个规格（例如：12.50～12.51～12.52）
Note: Each specification has an interval of 0.01MM (for example: 12.50 - 12.51 - 12.52)

钻尖系列	直径D/MM	刀座规格	材质	适配螺丝
Drill Tip Series	diameter	type	Material	Screw
XMJC	D10.00-11.99	Z	XM6010	M2.0*7.5
XMJC	D12.00-12.99	Y	XM6010	M2.2×7.5
XMKS	D12.50-13.50	C	XM6020	M3.0/M2.5*14
XMKS	D13.51-14.50	B	XM6020	M3.0/M2.5*14
XMKS	D14.51-15.99	A	XM6020	M3.0/M2.5*14
XMKS	D16.00-18.00	1	XM6020	M3.5/M2.5*16
XMKS	D18.01-19.99	2	XM6020	M4.0/M3.0*19
XMKS	D20.00-22.00	3	XM6020	M4.0/M3.0*19
XMKS	D22.01-24.00	4	XM6020	M4.0/M3.0*19
XMKS	D24.01-26.00	5	XM6020	M5.0/M4.0*23
XMKS	D26.01-28.00	6	XM6020	M5.0/M4.0*23
XMKS	D28.01-30.00	7	XM6020	M6.0/M5.0*28
XMKS	D30.01-32.00	8	XM6020	M6.0/M5.0*28
XMKS	D32.01-36.99	9	XM6020	M6.0/M6.0*32
XMKS	D37.00-40.99	10	XM6020	M6.0/M6.0*32

剑齿钻-3D

Arrow - tooth Drill - 3D

型号/Cat.No	D1 min	D1 max	刀座尺寸	柄长（LS）	柄径D	接水口螺纹	有效长（L1）	刀片锁紧螺丝	扳手
3D			type	Shank length	Shank diameter	Thread of the water connection port	Effective length	Clamp scre	Wrench
JC-10-3D-C12	10.000	10.490	Z	48	12	M6	31.5	M2.0×7.5	MT-06
JC-10.5-3D-C12	10.500	10.990	Z	48	12	M6	33	M2.0×7.5	MT-06
JC-11-3D-C12	11.000	11.490	Z	48	12	M6	34.5	M2.0×7.5	MT-06
JC-11.5-3D-C12	11.500	11.990	Z	48	12	M6	36	M2.0×7.5	MT-06
JC-12-3D-C16	12.000	12.490	Y	48	16	PC1/8	37.5	M2.2×7.5	MT-08
JC-12.5-3D-C16	12.500	12.990	Y	48	16	PC1/8	39	M2.2×7.5	MT-08

剑齿钻-6D

Arrow - tooth Drill - 6D

型号/Cat.No	D1 min	D1 max	刀座尺寸	柄长（LS）	柄径D	接水口螺纹	有效长（L1）	刀片锁紧螺丝	扳手
6D			type	Shank length	Shank diameter	Thread of the water connection port	Effective length	Clamp scre	Wrench
JC-10-6D-C12	10.000	10.490	Z	48	12	M6	63	M2.0×7.5	MT-06
JC-10.5-6D-C12	10.500	10.990	Z	48	12	M6	66	M2.0×7.5	MT-06
JC-11-6D-C12	11.000	11.490	Z	48	12	M6	69	M2.0×7.5	MT-06
JC-11.5-6D-C12	11.500	11.990	Z	48	12	M6	72	M2.0×7.5	MT-06
JC-12-6D-C16	12.000	12.490	Y	48	16	PC1/8	75	M2.2×7.5	MT-08
JC-12.5-6D-C16	12.500	12.990	Y	48	16	PC1/8	78	M2.2×7.5	MT-08

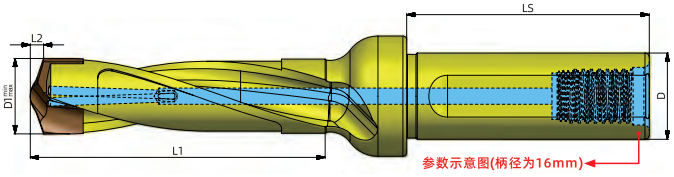



皇冠钻(模块化钻)-3D

Modular Drill-3D

型号/Cat.No 3D	D1 min	D1 max	刀座尺寸 type	刀尖悬伸（L2） Knife tip depth	柄长（LS） Handle length	柄径D/接水口 Shank diamete / Water connection	有效长（L1） Effective length	中心锁紧螺丝 Center locking screw	扳手 Wrench
KS-12.5-3D-C16 KSEM125R3WN16M	12.500	12.990	C	2.000	45	16/PC1/8	39	M3.0/M2.5*14	T6*160 3D/5D
KS-13-3D-C16 KSEM130R3WN16M	13.000	13.500	C	2.100	45	16/PC1/8	40.5	M3.0/M2.5*14	T6*160 3D/5D
KS-13.5-3D-C16 KSEM135R3WN16M	13.510	13.990	B	2.100	45	16/PC1/8	42	M3.0/M2.5*14	T6*160 3D/5D
KS-14-3D-C16 KSEM140R3WN16M	14.000	14.500	B	2.200	45	16/PC1/8	43.5	M3.0/M2.5*14	T6*160 3D/5D
KS-14.5-3D-C20 KSEM145R3WN20M	14.510	14.990	A	2.300	50	20/PC1/8	45	M3.0/M2.5*14	T6*160 3D/5D
KS-15-3D-C20 KSEM150R3WN20M	15.000	15.990	A	2.400	50	20/PC1/8	48	M3.0/M2.5*14	T6*160 3D/5D
KS-16-3D-C20 KSEM160R3WN20M	16.000	16.990	1	2.500	50	20/PC1/8	51	M3.5/M2.5*16	1.5*190 3D/5D
KS-17-3D-C20 KSEM170R3WN20M	17.000	18.000	1	2.700	50	20/PC1/8	54	M3.5/M2.5*16	1.5*190 3D/5D
KS-18-3D-C25 KSEM180R3WN25M	18.010	18.990	2	2.900	56	25/PC1/8	57	M4.0/M3.0*19	2.0*210 3D/5D
KS-19-3D-C25 KSEM190R3WN25M	19.000	19.990	2	3.000	56	25/PC1/8	60	M4.0/M3.0*19	2.0*210 3D/5D
KS-20-3D-C25 KSEM200R3WN25M	20.000	20.990	3	3.200	56	25/PC1/8	63	M4.0/M3.0*19	2.0*210 3D/5D
KS-21-3D-C25 KSEM210R3WN25M	21.000	22.000	3	3.300	56	25/PC1/8	66	M4.0/M3.0*19	2.0*210 3D/5D
KS-22-3D-C25 KSEM220R3WN25M	22.010	22.990	4	3.500	56	25/PC1/8	69	M4.0/M3.0*19	2.0*210 3D/5D
KS-23-3D-C25 KSEM230R3WN25M	23.000	24.000	4	3.700	56	25/PC1/8	72	M4.0/M3.0*19	2.0*210 3D/5D
KS-24-3D-C32 KSEM240R3WN32M	24.010	24.990	5	3.800	60	32/PC1/4	75	M5.0/M4.0*23	2.5*240 3D/5D
KS-25-3D-C32 KSEM250R3WN32M	25.000	26.000	5	3.800	60	32/PC1/4	78	M5.0/M4.0*23	2.5*240 3D/5D
KS-26-3D-C32 KSEM260R3WN32M	26.010	26.990	6	4.000	60	32/PC1/4	81	M5.0/M4.0*23	2.5*240 3D/5D
KS-27-3D-C32 KSEM270R3WN32M	27.000	28.000	6	4.200	60	32/PC1/4	84	M5.0/M4.0*23	2.5*240 3D/5D
KS-28-3D-C32 KSEM280R3WN32M	28.010	28.990	7	4.300	60	32/PC1/4	87	M6.0/M5.0*28	3.0*350 3D/5D
KS-29-3D-C32 KSEM290R3WN32M	29.000	30.000	7	4.500	60	32/PC1/4	90	M6.0/M5.0*28	3.0*350 3D/5D
KS-30-3D-C32 KSEM300R3WN32M	30.010	30.990	8	4.600	60	32/PC1/4	93	M6.0/M5.0*28	3.0*350 3D/5D
KS-31-3D-C32 KSEM310R3WN32M	31.000	32.000	8	4.800	60	32/PC1/4	96	M6.0/M5.0*28	3.0*350 3D/5D
KS-32-3D-C40 KSEM320R3WN40M	32.010	32.990	9	4.900	70	40/PC1/4	99	M6.0/M6.0*32	3.0*350 3D/5D
KS-33-3D-C40 KSEM330R3WD40M	33.000	33.990	9	5.100	70	40/PC1/4	102	M6.0/M6.0*32	3.0*350 3D/5D
KS-34-3D-C40 KSEM340R3WD40M	34.000	34.990	9	5.200	70	40/PC1/4	105	M6.0/M6.0*32	3.0*350 3D/5D
KS-35-3D-C40 KSEM350R3WD40M	35.000	36.000	9	5.400	70	40/PC1/4	108	M6.0/M6.0*32	3.0*350 3D/5D
KS-36-3D-C40 KSEM360R3WD40M	36.010	36.990	10	5.500	70	40/PC1/4	111	M6.0/M6.0*32	3.0*350 3D/5D
KS-37-3D-C40 KSEM370R3WD40M	37.000	37.990	10	5.700	70	40/PC1/4	114	M6.0/M6.0*32	3.0*350 3D/5D
KS-38-3D-C40 KSEM380R3WD40M	38.000	38.990	10	5.800	70	40/PC1/4	117	M6.0/M6.0*32	3.0*350 3D/5D
KS-39-3D-C40 KSEM390R3WD40M	39.000	39.990	10	6.000	70	40/PC1/4	120	M6.0/M6.0*32	3.0*350 3D/5D
KS-40-3D-C40 KSEM400R3WD40M	40.000	40.990	10	6.200	70	40/PC1/4	123	M6.0/M6.0*32	3.0*350 3D/5D

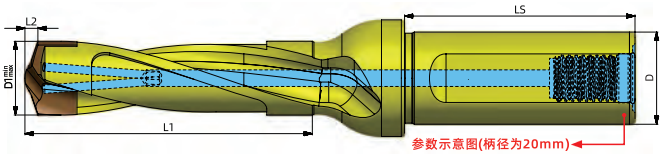



皇冠钻(模块化钻)-5D

Modular Drill-5D

型号/Cat.No 5D	D1 min	D1 max	刀座尺寸 type	刀尖悬伸（L2） Knife tip depth	柄长（LS） Handle length	柄径D/接水口 Shank diamete / Water connection	有效长（L1） Effective length	中心锁紧螺丝 Center locking screw	扳手 Wrench
KS-12.5-5D-C16 KSEM125R5WN16M	12.500	12.990	C	2.000	45	16/PC1/8	65	M3.0/M2.5*14	T6*160 3D/5D
KS-13-5D-C16 KSEM130R5WN16M	13.000	13.500	C	2.100	45	16/PC1/8	67.5	M3.0/M2.5*14	T6*160 3D/5D
KS-13.5-5D-C16 KSEM135R5WN16M	13.510	13.990	B	2.100	45	16/PC1/8	70	M3.0/M2.5*14	T6*160 3D/5D
KS-14-5D-C16 KSEM140R5WN16M	14.000	14.500	B	2.200	45	16/PC1/8	72.5	M3.0/M2.5*14	T6*160 3D/5D
KS-14.5-5D-C20 KSEM145R5WN20M	14.510	14.990	A	2.300	50	20/PC1/8	75	M3.0/M2.5*14	T6*160 3D/5D
KS-15-5D-C20 KSEM150R5WN20M	15.000	15.990	A	2.400	50	20/PC1/8	80	M3.0/M2.5*14	T6*160 3D/5D
KS-16-5D-C20 KSEM160R5WN20M	16.000	16.990	1	2.500	50	20/PC1/8	85	M3.5/M2.5*16	1.5*190 3D/5D
KS-17-5D-C20 KSEM170R5WN20M	17.000	18.000	1	2.700	50	20/PC1/8	90	M3.5/M2.5*16	1.5*190 3D/5D
KS-18-5D-C25 KSEM180R5WN25M	18.010	18.990	2	2.900	56	25/PC1/8	95	M4.0/M3.0*19	2.0*210 3D/5D
KS-19-5D-C25 KSEM190R5WN25M	19.000	19.990	2	3.000	56	25/PC1/8	100	M4.0/M3.0*19	2.0*210 3D/5D
KS-20-5D-C25 KSEM200R5WN25M	20.000	20.990	3	3.200	56	25/PC1/8	105	M4.0/M3.0*19	2.0*210 3D/5D
KS-21-5D-C25 KSEM210R5WN25M	21.000	22.000	3	3.300	56	25/PC1/8	110	M4.0/M3.0*19	2.0*210 3D/5D
KS-22-5D-C25 KSEM220R5WN25M	22.010	22.990	4	3.500	56	25/PC1/8	115	M4.0/M3.0*19	2.0*210 3D/5D
KS-23-5D-C25 KSEM230R5WN25M	23.000	24.000	4	3.700	56	25/PC1/8	120	M4.0/M3.0*19	2.0*210 3D/5D
KS-24-5D-C32 KSEM240R5WN32M	24.010	24.990	5	3.800	60	32/PC1/4	125	M5.0/M4.0*23	2.5*240 3D/5D
KS-25-5D-C32 KSEM250R5WN32M	25.000	26.000	5	3.800	60	32/PC1/4	130	M5.0/M4.0*23	2.5*240 3D/5D
KS-26-5D-C32 KSEM260R5WN32M	26.010	26.990	6	4.000	60	32/PC1/4	135	M5.0/M4.0*23	2.5*240 3D/5D
KS-27-5D-C32 KSEM270R5WN32M	27.000	28.000	6	4.200	60	32/PC1/4	140	M5.0/M4.0*23	2.5*240 3D/5D
KS-28-5D-C32 KSEM280R5WN32M	28.010	28.990	7	4.300	60	32/PC1/4	145	M6.0/M5.0*28	3.0*350 3D/5D
KS-29-5D-C32 KSEM290R5WN32M	29.000	30.000	7	4.500	60	32/PC1/4	150	M6.0/M5.0*28	3.0*350 3D/5D
KS-30-5D-C32 KSEM300R5WN32M	30.010	30.990	8	4.600	60	32/PC1/4	155	M6.0/M5.0*28	3.0*350 3D/5D
KS-31-5D-C32 KSEM310R5WN32M	31.000	32.000	8	4.800	60	32/PC1/4	160	M6.0/M5.0*28	3.0*350 3D/5D
KS-32-5D-C40 KSEM320R5WN40M	32.010	32.990	9	4.900	70	40/PC1/4	165	M6.0/M6.0*32	3.0*350 3D/5D
KS-33-5D-C40 KSEM330R5WD40M	33.000	33.990	9	5.100	70	40/PC1/4	170	M6.0/M6.0*32	3.0*350 3D/5D
KS-34-5D-C40 KSEM340R5WD40M	34.000	34.990	9	5.200	70	40/PC1/4	175	M6.0/M6.0*32	3.0*350 3D/5D
KS-35-5D-C40 KSEM350R5WD40M	35.000	36.000	9	5.400	70	40/PC1/4	180	M6.0/M6.0*32	3.0*350 3D/5D
KS-36-5D-C40 KSEM360R5WD40M	36.010	36.990	10	5.500	70	40/PC1/4	185	M6.0/M6.0*32	3.0*350 3D/5D
KS-37-5D-C40 KSEM370R5WD40M	37.000	37.990	10	5.700	70	40/PC1/4	190	M6.0/M6.0*32	3.0*350 3D/5D
KS-38-5D-C40 KSEM380R5WD40M	38.000	38.990	10	5.800	70	40/PC1/4	195	M6.0/M6.0*32	3.0*350 3D/5D
KS-39-5D-C40 KSEM390R5WD40M	39.000	39.990	10	6.000	70	40/PC1/4	200	M6.0/M6.0*32	3.0*350 3D/5D
KS-40-5D-C40 KSEM400R5WD40M	40.000	40.990	10	6.200	70	40/PC1/4	205	M6.0/M6.0*32	3.0*350 3D/5D

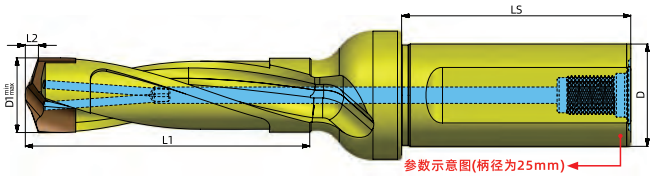



皇冠钻(模块化钻)-7D

Modular Drill-7D

型号/Cat.No 7D	D1 min	D1 max	刀座尺寸	刀尖悬伸（L2）	柄长（LS）	柄径D/接水口	有效长（L1）	中心锁紧螺丝	扳手
			type	Knife tip depth	Handle length	Shank diamete / Water connection	Effective length	Center locking screw	Wrench
KS-12.5-7D-C16 KSEM125R7WN16M	12.500	12.990	C	2.000	45	16/PC1/8	91	M3.0/M2.5*14	T6*260 7D/10D
KS-13-7D-C16 KSEM130R7WN16M	13.000	13.500	C	2.100	45	16/PC1/8	94.5	M3.0/M2.5*14	T6*260 7D/10D
KS-13.5-7D-C16 KSEM135R7WN16M	13.510	13.990	B	2.100	45	16/PC1/8	98	M3.0/M2.5*14	T6*260 7D/10D
KS-14-7D-C16 KSEM140R7WN16M	14.000	14.500	B	2.200	45	16/PC1/8	101.5	M3.0/M2.5*14	T6*260 7D/10D
KS-14.5-7D-C20 KSEM145R7WN20M	14.510	14.990	A	2.300	50	20/PC1/8	105	M3.0/M2.5*14	T6*260 7D/10D
KS-15-7D-C20 KSEM150R7WN20M	15.000	15.990	A	2.400	50	20/PC1/8	112	M3.0/M2.5*14	T6*260 7D/10D
KS-16-7D-C20 KSEM160R7WN20M	16.000	16.990	1	2.500	50	20/PC1/8	119	M3.5/M2.5*16	1.5*330 7D/10D
KS-17-7D-C20 KSEM170R7WN20M	17.000	18.000	1	2.700	50	20/PC1/8	126	M3.5/M2.5*16	1.5*330 7D/10D
KS-18-7D-C25 KSEM180R7WN25M	18.010	18.990	2	2.900	56	25/PC1/8	133	M4.0/M3.0*19	2.0*280 7D/8D
KS-19-7D-C25 KSEM190R7WN25M	19.000	19.990	2	3.000	56	25/PC1/8	140	M4.0/M3.0*19	2.0*280 7D/8D
KS-20-7D-C25 KSEM200R7WN25M	20.000	20.990	3	3.200	56	25/PC1/8	147	M4.0/M3.0*19	2.0*280 7D/8D
KS-21-7D-C25 KSEM210R7WN25M	21.000	22.000	3	3.300	56	25/PC1/8	154	M4.0/M3.0*19	2.0*280 7D/8D
KS-22-7D-C25 KSEM220R7WN25M	22.010	22.990	4	3.500	56	25/PC1/8	161	M4.0/M3.0*19	2.0*280 7D/8D
KS-23-7D-C25 KSEM230R7WN25M	23.000	24.000	4	3.700	56	25/PC1/8	168	M4.0/M3.0*19	2.0*280 7D/8D
KS-24-7D-C32 KSEM240R7WN32M	24.010	24.990	5	3.800	60	32/PC1/4	175	M5.0/M4.0*23	2.5*320 7D/8D
KS-25-7D-C32 KSEM250R7WN32M	25.000	26.000	5	3.800	60	32/PC1/4	182	M5.0/M4.0*23	2.5*320 7D/8D
KS-26-7D-C32 KSEM260R7WN32M	26.010	26.990	6	4.000	60	32/PC1/4	189	M5.0/M4.0*23	2.5*320 7D/8D
KS-27-7D-C32 KSEM270R7WN32M	27.000	28.000	6	4.200	60	32/PC1/4	196	M5.0/M4.0*23	2.5*320 7D/8D
KS-28-7D-C32 KSEM280R7WN32M	28.010	28.990	7	4.300	60	32/PC1/4	203	M6.0/M5.0*28	3.0*450 7D/8D
KS-29-7D-C32 KSEM290R7WN32M	29.000	30.000	7	4.500	60	32/PC1/4	210	M6.0/M5.0*28	3.0*450 7D/8D
KS-30-7D-C32 KSEM300R7WN32M	30.010	30.990	8	4.600	60	32/PC1/4	217	M6.0/M5.0*28	3.0*450 7D/8D
KS-31-7D-C32 KSEM310R7WN32M	31.000	32.000	8	4.800	60	32/PC1/4	224	M6.0/M5.0*28	3.0*450 7D/8D
KS-32-7D-C40 KSEM320R7WN40M	32.010	32.990	9	4.900	70	40/PC1/4	231	M6.0/M6.0*32	3.0*450 7D/8D
KS-33-7D-C40 KSEM330R7WD40M	33.000	33.990	9	5.100	70	40/PC1/4	238	M6.0/M6.0*32	3.0*450 7D/8D
KS-34-7D-C40 KSEM340R7WD40M	34.000	34.990	9	5.200	70	40/PC1/4	245	M6.0/M6.0*32	3.0*450 7D/8D
KS-35-7D-C40 KSEM350R7WD40M	35.000	36.000	9	5.400	70	40/PC1/4	252	M6.0/M6.0*32	3.0*450 7D/8D
KS-36-7D-C40 KSEM360R7WD40M	36.010	36.990	10	5.500	70	40/PC1/4	259	M6.0/M6.0*32	3.0*450 7D/8D
KS-37-7D-C40 KSEM370R7WD40M	37.000	37.990	10	5.700	70	40/PC1/4	266	M6.0/M6.0*32	3.0*450 7D/8D
KS-38-7D-C40 KSEM380R7WD40M	38.000	38.990	10	5.800	70	40/PC1/4	273	M6.0/M6.0*32	3.0*450 7D/8D
KS-39-7D-C40 KSEM390R7WD40M	39.000	39.990	10	6.000	70	40/PC1/4	280	M6.0/M6.0*32	3.0*450 7D/8D
KS-40-7D-C40 KSEM400R7WD40M	40.000	40.990	10	6.200	70	40/PC1/4	287	M6.0/M6.0*32	3.0*450 7D/8D

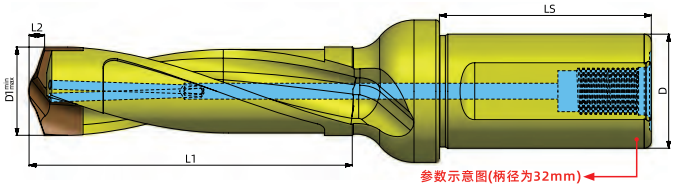



皇冠钻(模块化钻)-10D

Modular Drill-10D

型号/Cat.No 10D	D1 min	D1 max	刀座尺寸	刀尖悬伸（L2）	柄长（LS）	柄径D/接水口	有效长（L1）	中心锁紧螺丝	扳手
			type	Knife tip depth	Handle length	Shank diamete / Water connection	Effective length	Center locking screw	Wrench
KS-12.5-10D-C16 KSEM125R10WN16M	12.500	12.990	C	2.000	45	16/PC1/8	130	M3.0/M2.5*14	T6*260 7D/10D
KS-13-10D-C16 KSEM130R10WN16M	13.000	13.500	C	2.100	45	16/PC1/8	135	M3.0/M2.5*14	T6*260 7D/10D
KS-13.5-10D-C16 KSEM135R10WN16M	13.510	13.990	B	2.100	45	16/PC1/8	140	M3.0/M2.5*14	T6*260 7D/10D
KS-14-10D-C16 KSEM140R10WN16M	14.000	14.500	B	2.200	45	16/PC1/8	145	M3.0/M2.5*14	T6*260 7D/10D
KS-14.5-10D-C20 KSEM145R10WN20M	14.510	14.990	A	2.300	50	20/PC1/8	150	M3.0/M2.5*14	T6*260 7D/10D
KS-15-10D-C20 KSEM150R10WN20M	15.000	15.990	A	2.400	50	20/PC1/8	160	M3.0/M2.5*14	T6*260 7D/10D
KS-16-10D-C20 KSEM160R10WN20M	16.000	16.990	1	2.500	50	20/PC1/8	170	M3.5/M2.5*16	1.5*330 7D/10D
KS-17-10D-C20 KSEM170R10WN20M	17.000	18.000	1	2.700	50	20/PC1/8	180	M3.5/M2.5*16	1.5*330 7D/10D
KS-18-10D-C25 KSEM180R10WN25M	18.010	18.990	2	2.900	56	25/PC1/8	190	M4.0/M3.0*19	2.0*280 7D/8D
KS-19-10D-C25 KSEM190R10WN25M	19.000	19.990	2	3.000	56	25/PC1/8	200	M4.0/M3.0*19	2.0*280 7D/8D
KS-20-10D-C25 KSEM200R10WN25M	20.000	20.990	3	3.200	56	25/PC1/8	210	M4.0/M3.0*19	2.0*280 7D/8D
KS-21-10D-C25 KSEM210R10WN25M	21.000	22.000	3	3.300	56	25/PC1/8	220	M4.0/M3.0*19	2.0*370 10D/12D
KS-22-10D-C25 KSEM220R10WN25M	22.010	22.990	4	3.500	56	25/PC1/8	230	M4.0/M3.0*19	2.0*370 10D/12D
KS-23-10D-C25 KSEM230R10WN25M	23.000	24.000	4	3.700	56	25/PC1/8	240	M4.0/M3.0*19	2.0*370 10D/12D
KS-24-10D-C32 KSEM240R10WN32M	24.010	24.990	5	3.800	60	32/PC1/4	250	M5.0/M4.0*23	2.5*420 10D/12D
KS-25-10D-C32 KSEM250R10WN32M	25.000	26.000	5	3.800	60	32/PC1/4	260	M5.0/M4.0*23	2.5*420 10D/12D
KS-26-10D-C32 KSEM260R10WN32M	26.010	26.990	6	4.000	60	32/PC1/4	270	M5.0/M4.0*23	2.5*420 10D/12D
KS-27-10D-C32 KSEM270R10WN32M	27.000	28.000	6	4.200	60	32/PC1/4	280	M5.0/M4.0*23	2.5*420 10D/12D
KS-28-10D-C32 KSEM280R10WN32M	28.010	28.990	7	4.300	60	32/PC1/4	290	M6.0/M5.0*28	3.0*515 10D/12D
KS-29-10D-C32 KSEM290R10WN32M	29.000	30.000	7	4.500	60	32/PC1/4	300	M6.0/M5.0*28	3.0*515 10D/12D
KS-30-10D-C32 KSEM300R10WN32M	30.010	30.990	8	4.600	60	32/PC1/4	310	M6.0/M5.0*28	3.0*515 10D/12D
KS-31-10D-C32 KSEM310R10WN32M	31.000	32.000	8	4.800	60	32/PC1/4	320	M6.0/M5.0*28	3.0*515 10D/12D
KS-32-10D-C40 KSEM320R10WN40M	32.010	32.990	9	4.900	70	40/PC1/4	330	M6.0/M6.0*32	3.0*515 10D/12D
KS-33-10D-C40 KSEM330R10WD40M	33.000	33.990	9	5.100	70	40/PC1/4	340	M6.0/M6.0*32	3.0*515 10D/12D
KS-34-10D-C40 KSEM340R10WD40M	34.000	34.990	9	5.200	70	40/PC1/4	350	M6.0/M6.0*32	3.0*515 10D/12D
KS-35-10D-C40 KSEM350R10WD40M	35.000	36.000	9	5.400	70	40/PC1/4	360	M6.0/M6.0*32	3.0*515 10D/12D
KS-36-10D-C40 KSEM360R10WD40M	36.010	36.990	10	5.500	70	40/PC1/4	370	M6.0/M6.0*32	3.0*515 10D/12D
KS-37-10D-C40 KSEM370R10WD40M	37.000	37.990	10	5.700	70	40/PC1/4	380	M6.0/M6.0*32	3.0*515 10D/12D
KS-38-10D-C40 KSEM380R10WD40M	38.000	38.990	10	5.800	70	40/PC1/4	390	M6.0/M6.0*32	3.0*515 10D/12D
KS-39-10D-C40 KSEM390R10WD40M	39.000	39.990	10	6.000	70	40/PC1/4	400	M6.0/M6.0*32	3.0*515 10D/12D
KS-40-10D-C40 KSEM400R10WD40M	40.000	40.990	10	6.200	70	40/PC1/4	410	M6.0/M6.0*32	3.0*515 10D/12D

皇冠钻立式加工3D/5D加工参数

Crown Drill Vertical Machining 3D/5D Machining Parameters

规格型号/3D/5D	内冷压力＞bar	低碳钢 ＜HRC28°		中碳钢、合金钢 HRC30°-HRC40°		铸铁		不锈钢	
		线速度 VC(m/min)	每转进给 fz(mm/t)	线速度 VC(m/min)	每转进给 fz(mm/t)	线速度 VC(m/min)	每转进给 fz(mm/t)	线速度 VC(m/min)	每转进给 fz(mm/t)
ф12-12.99mm	6	80-100	0.1-0.15	90-110	0.12-0.16	70-90	0.15-0.2	80-100	0.1-0.15
ф13-14.99mm	7	80-100	0.15-0.18	90-110	0.16-0.19	70-90	0.15-0.2	80-100	0.1-0.18
ф15-18.99mm	10	90-110	0.17-0.2	90-120	0.18-0.22	75-100	0.2-0.25	90-110	0.1-0.2
ф19-23.99mm	14	90-110	0.15*0.20	90-120	0.17*0.22	75-100	0.18-0.25	90-110	0.1-0.2
ф24-27.99mm	18	90-110	0.15*0.20	90-120	0.18*0.25	75-100	0.18-0.25	90-110	0.12-0.2
ф28-32.99mm	25	80-110	0.15*0.20	90-110	0.22*0.3	70-90	0.18-0.25	80-100	0.12-0.2
ф33-35.99mm	33	80-110	0.15*0.20	90-110	0.22*0.3	70-90	0.18-0.25	80-100	0.12-0.2
ф36-40.99mm	33	80-110	0.15*0.20	90-110	0.22*0.3	70-90	0.18-0.25	80-100	0.12-0.2

皇冠钻立式加工7D/10D加工参数

Crown Drill Vertical Machining 7D/10D Machining Parameters

规格型号/7D/1D	内冷压力＞bar	低碳钢 ＜HRC28°		中碳钢、合金钢 HRC30°-HRC40°		铸铁		不锈钢	
		线速度 VC(m/min)	每转进给 fz(mm/t)	线速度 VC(m/min)	每转进给 fz(mm/t)	线速度 VC(m/min)	每转进给 fz(mm/t)	线速度 VC(m/min)	每转进给 fz(mm/t)
ф12-12.99mm	9	80-100	0.1-0.15	90-110	0.15-0.2	70-90	0.12-0.2	80-100	0.1-0.15
ф13-14.99mm	12	80-100	0.1-0.18	90-110	0.15-0.2	70-90	0.12-0.2	80-100	0.1-0.18
ф15-18.99mm	16	90-110	0.1-0.2	90-120	0.15-0.25	75-100	0.15-0.25	90-110	0.1-0.2
ф19-23.99mm	23	90-110	0.2*0.25	90-120	0.15-0.25	75-100	0.15-0.25	90-110	0.1-0.2
ф24-27.99mm	29	90-110	0.2*0.25	90-120	0.15-0.3	75-100	0.15-0.25	90-110	0.12-0.2
ф28-32.99mm	39	80-110	0.2*0.25	90-110	0.15-0.3	70-90	0.15-0.25	80-100	0.12-0.2
ф33-35.99mm	52	80-110	0.2*0.25	90-110	0.15-0.3	70-90	0.15-0.25	80-100	0.12-0.2
ф36-40.99mm	52	80-110	0.2*0.25	90-110	0.15-0.3	70-90	0.15-0.25	80-100	0.12-0.2

皇冠钻卧式加工3D/5D加工参数

Machining parameters for 3D/5D horizontal machining of Crown Drill

规格型号/3D/5D	内冷压力＞bar	低碳钢 ＜HRC28°		中碳钢、合金钢 HRC30°-HRC40°		铸铁		不锈钢	
		线速度 VC(m/min)	每转进给 fz(mm/t)	线速度 VC(m/min)	每转进给 fz(mm/t)	线速度 VC(m/min)	每转进给 fz(mm/t)	线速度 VC(m/min)	每转进给 fz(mm/t)
ф12-12.99mm	4	80-100	0.1-0.15	90-110	0.12-0.16	70-90	0.15-0.2	80-100	0.1-0.15
ф13-14.99mm	5	80-100	0.15-0.18	90-110	0.16-0.19	70-90	0.15-0.2	80-100	0.1-0.18
ф15-18.99mm	7	90-110	0.17-0.2	90-120	0.18-0.22	75-100	0.2-0.25	90-110	0.1-0.2
ф19-23.99mm	10	90-110	0.15*0.20	90-120	0.17*0.22	75-100	0.18-0.25	90-110	0.1-0.2
ф24-27.99mm	13	90-110	0.15*0.20	90-120	0.18*0.25	75-100	0.18-0.25	90-110	0.12-0.2
ф28-32.99mm	18	80-110	0.15*0.20	90-110	0.22*0.3	70-90	0.18-0.25	80-100	0.12-0.2
ф33-35.99mm	23	80-110	0.15*0.20	90-110	0.22*0.3	70-90	0.18-0.25	80-100	0.12-0.2
ф36-40.99mm	23	80-110	0.15*0.20	90-110	0.22*0.3	70-90	0.18-0.25	80-100	0.12-0.2

皇冠钻卧式加工7D/10D加工参数

Machining parameters for 7D/10D horizontal machining of Crown Drill

规格型号/7D/1D	内冷压力＞bar	低碳钢 ＜HRC28°		中碳钢、合金钢 HRC30°-HRC40°		铸铁		不锈钢	
		线速度 VC(m/min)	每转进给 fz(mm/t)	线速度 VC(m/min)	每转进给 fz(mm/t)	线速度 VC(m/min)	每转进给 fz(mm/t)	线速度 VC(m/min)	每转进给 fz(mm/t)
ф12-12.99mm	6	80-100	0.1-0.15	90-110	0.15-0.2	70-90	0.12-0.2	80-100	0.1-0.15
ф13-14.99mm	8	80-100	0.1-0.18	90-110	0.15-0.2	70-90	0.12-0.2	80-100	0.1-0.18
ф15-18.99mm	11	90-110	0.1-0.2	90-120	0.15-0.25	75-100	0.15-0.25	90-110	0.1-0.2
ф19-23.99mm	16	90-110	0.2*0.25	90-120	0.15-0.25	75-100	0.15-0.25	90-110	0.1-0.2
ф24-27.99mm	20	90-110	0.2*0.25	90-120	0.15-0.3	75-100	0.15-0.25	90-110	0.12-0.2
ф28-32.99mm	27	80-110	0.2*0.25	90-110	0.15-0.3	70-90	0.15-0.25	80-100	0.12-0.2
ф33-35.99mm	36	80-110	0.2*0.25	90-110	0.15-0.3	70-90	0.15-0.25	80-100	0.12-0.2
ф36-40.99mm	36	80-110	0.2*0.25	90-110	0.15-0.3	70-90	0.15-0.25	80-100	0.12-0.2

NBJ16微调精镗孔系统（套装） 镗孔范围φ8-φ46
NBJ16 fine tuning bore system (whole set)



标准套装 Standard Cat.	说明 Explain	主轴柄型号 Holder code
BT30–NBJ16–8P	8P标准版套装附带8支镗刀杆。镗孔范围 Φ8–Φ51 Standard set Include 8pcs boring bar Boring range Φ8–Φ51	BT30–NBJ–65
BT40–NBJ16–8P		BT40–NBJ–55
BT50–NBJ16–8P		BT50–NBJ–65
DAT30–NBJ16–8P		DAT30–NBJ–65
DAT40–NBJ16–8P		DAT40–NBJ–60
DAT50–NBJ16–8P		DAT50–NBJ–65
NT30(M)–NBJ16–8P		NT40(M)–NBJ–65
NT40(M)–NBJ16–8P		NT40(M)–NBJ–55
NT50(M)–NBJ16–8P		NT50(M)–NBJ–65
HSK63A–NBJ16–8P		HSK63A–NBJ–55
HSK100A–NBJ16–8P		HSK100A–NBJ–65

NBJ16微调精镗孔系统（组件） 镗孔范围φ8-φ46
NBJ16 fine tuning bore system(subassembly)

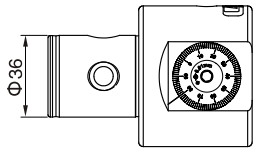

NBJ16 精镗头

型 號 Cat. No	調整精度 Tuning precision	調整行程 Stroke	重 量 Weight
NBJ16	Φ0.01mm/格	6	1.2

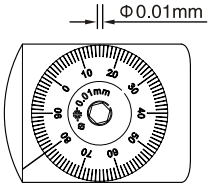

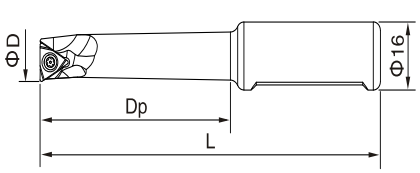

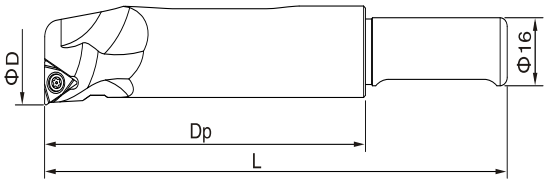

NBJ 精镗刀杆

型 號 Cat. No	鏜孔範圍ΦD Boring range	尺寸Size(mm) Dp	L	適用刀片 Applicable inserts	螺 釘 Clamp screw	扳 手 Wrench
NBJ–1608–32	Φ8–Φ11	32	86	TBGT0601..L	A20050J	T6
NBJ–1610–40	Φ10–Φ13	40	86			
NBJ–1612–53	Φ12–Φ15	53	96	TPGH0902..L	A25060G	T8
NBJ–1616–68	Φ16–Φ21	68	110			
NBJ–1620–83	Φ20–Φ26	83	123.5	TPGH1103..L	A30070E	T8
NBJ–1625–90	Φ25–Φ31	90	130.5			
NBJ–1630–90	Φ30–Φ36	90	130.5			
NBJ–1640–90	Φ40–Φ46	90	130.5			

◇ 本页规格为单独部件，整套订购请查阅本页上半页。
◇ 精镗刀杆不附带刀片，请另外订购。
◇ 组件订货示例：
1. 精镗头1件，型号NBJ16
2. 精镗刀杆1件，型号NBJ-1608-32

◇The specification on this page is separate subassembly. Whole set order please refer to the previous page.
◇Boring bar not include inserts. Please order inserts in addition.
◇Subassembly order illustration:
1.Boring head 1pcs, item no. NBJ16
2.Boring bar 1pcs, item no. NBJ-1608-32

NBH2084微调精镗孔系统（套装） 镗孔范围φ8-φ280
NBH2084 fine tuning boring system(whole set)

●larger boring range make the bore system have a widely use.



标准套装 Standard Cat.	说明 Explain	主轴柄型号 Holder code
R8–NBH2084–3P(8P)	8P标准版套装附带8支镗刀杆。镗孔范围Φ8–Φ280 8P full edition include 8pcs boring bar Boring rangeΦ8–Φ280	R8–NBH
BT40–NBH2084–3P(8P)		BT40–NBH–50B
BT50–NBH2084–3P(8P)		BT50–NBH–55B
DAT40–NBH2084–3P(8P)		DAT40–NBH
DAT50–NBH2084–3P(8P)		DAT50–NBH
NT30(M)–NBH2084–3P(8P)		NT30(M)–NBH
NT40(M)–NBH2084–3P(8P)		NT40(M)–NBH
NT50(M)–NBH2084–3P(8P)		NT50(M)–NBH



◇ 本页规格为套装组合，主轴柄、精镗头、镗刀杆均可单独购买。
◇ NT型锥柄的套装为公英制订货型号有所不同，具体参看订货示例：
◇ 套装订货示例：
1.BT型： BT50–NBH2084–8P
2.NT型：公制 NT50M–NBH2084–8P；英制 NT50–NBH2084–8P
2.BT型(不含鏜刀杆)： BT50–NBH2084

◇The specification on the page is set.You can order holder, boring head, boring bar separately.
◇NT boring holder set metric and inch is with different item no. Details please refer to order illustration.
◇set order illustration:
1.BT set type: BT50–NBH2084–8P
2.NT set type: metric NT50M–NBH2084–8P; inch NT50–NBJH2084–8P
3.BT type(not include boring bar): BT50–NBH2084

NBH2084微调精镗孔系统（组件） 镗孔范围φ8-φ280
NBH2084 fine tuning boring system(subassembly)

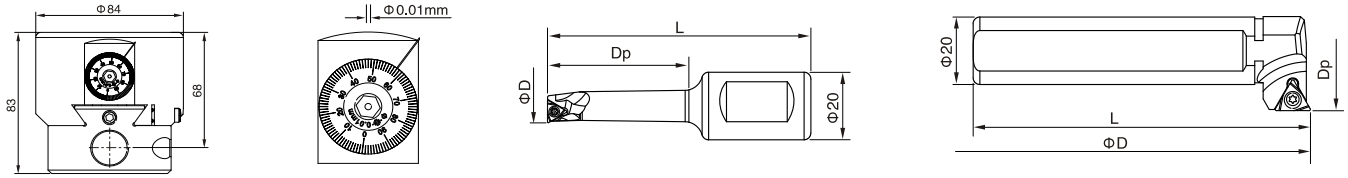

库存品 Stock ★ / 型号 Cat. No		镗孔范围 Full edition boring range	尺寸Size(mm) Dp	L	适用刀片 Applicable inserts	螺钉 Clamp screw	扳手 Wrench
★	NBH–2008–32	Φ8–Φ11	32	78	TBGT0601..L	A20050J	T6
★	NBH–2010–40	Φ10–Φ13	40	78			
★	NBH–2012–53	Φ12–Φ17	53	88	TPGH0902..L	A25060G	T8
★	NBH–2016–68	Φ16–Φ21	68	103			
★	NBH–2020–83	Φ20–Φ130	83	116	TPGH1103..L	A30070E	T8
★	NBH–2025–96	Φ25–Φ135	96	135			
★	NBH–2030–115	Φ30–Φ140	115	154			
★	NBH–20120–L	Φ120–Φ280	84+BTL	100			

◇ 本页规格为单独部件，整套订购请查阅本页上半页。
◇ 精镗刀杆不附带刀片，请另外订购。
◇ 组件订货示例：
1. 精镗头1件， 型号NBH2084
2. 精镗刀杆1件， 型号NBH-20120-L

◇The specification on this page is separate subassembly. Whole set order please refer to the previous page.
◇Boring bar not include inserts. Please order inserts in addition.
◇Subassembly order illustration:
1.Boring head 1pcs, item no. NBH2084
2.Boring bar 1pcs, item no. NBH–20120–L

J46 型可逆攻丝夹头 REVERSIBLE TAPPING CHUCK

1．过载保护
2．扭矩可调
3．具有可逆转装置，
丝锥退回迅速不需要机床主轴反转
4．操作简便

1．Overload protection
2．Adjustable torque
3．Reverse device：self—reversing without need for stopping and reversing the spindle，faster withdrawal
4．Simple operation



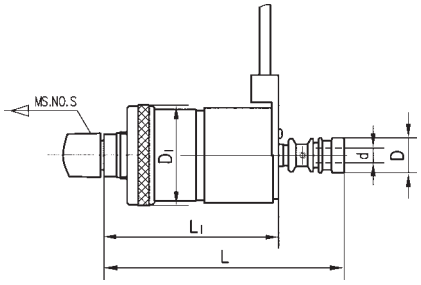

型号 Cat No	攻丝范围 Tapping range	d	D	D1	L	L1	莫氏柄 MS.NO.S
J467	M2—M7	2.5—6.5	23	55	135	95	MS2—JT33 MS3—JT33
J4612	M5—M12	3.5—10	28	75	164	114.5	MS3—M16 MS4—M16
J4620	M8—M20	6.0—14	38	90.5	205	135	MS3—M20 MS4—M20

操作示意图 Operating figture

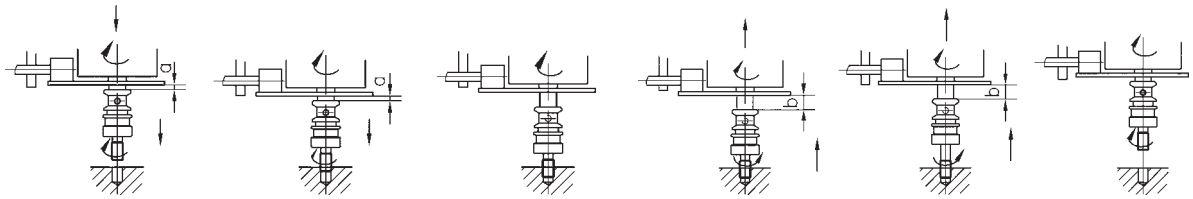

所配柔性夹头：RUBBER FLEX COLLETS for reversible tapping chuck



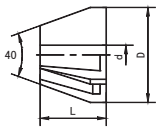

型号 Cat No	D	d	L
J467—1	15	2.5—4.2	11
J467—2	15	4.2—6.5	11
J4612—1	21	3.5—7.0	13
J4612—2	21	7.0—10	13
J4620—1	26.5	6.0—9.0	15
J4620—2	26.5	9.0—14	15
J4620—3	26.9	12.7—19.05	12

柔性夹头J4620—3为特殊定制，需要时需注明。
J4620—3 rubber flex collet is to be purchased specially.

非標刀具
Nonstandard tool for boring

●高效率：一把刀具可以在一次進給中完成多工序加工。
●High-efficiency: a tool can achieve multi-machininging procedures in one feedrate.
●高剛性：由于是量身定制，刀具可以按加工要求設計成最高剛性結構。
●High-rigidity: the tool can be designed maximum rigidity structure according to machininging requirements.
●超靈活：無論是超長超大還是特殊形狀的刀具都能爲您定制。
●Convenient: super-large or super-long ,special shape of the tool can be customized for you.

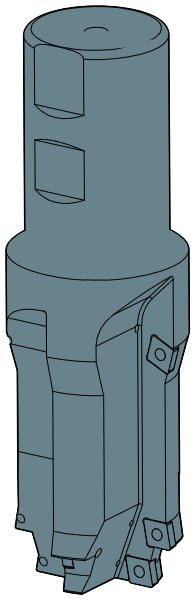

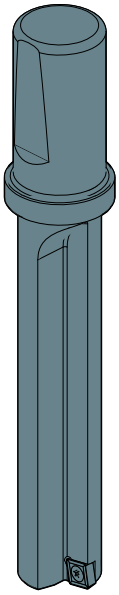

※定制非標刀具的一般步驟:

第一步：提供工件加工圖紙，并詳細注明需要加工位置的尺寸要求及工件的材質、硬度。
Step1: provide machining drawings and mark the machininging position size and working piece material and hardness.
第二步：指定刀具柄部的型式，可以是BT等整體式主軸柄，也可以是削平柄或斜削平柄等直柄或其它任何形式的接口
Step2: please inform the boring holder type,BT type or other types.
第三步：盡可能詳細的提供下述資料以便我們爲您量身定制最符合您需求的刀具。
Step3: please provide the following information in details

機床類型Machine tool style_____

機床功率Machine tool power(KW)_____

最大轉速Maximum rotate speed((RPM)_____

最大冷却液壓力Maximum coolant pressure_____

鑽頭旋轉Drill rotation☐ 工件旋轉Workpiece rotation☐ 垂直鑽削Vertical drilling☐ 水平鑽削horizontal drilling☐

冷却方式Cooling ways 内冷Inner cool☐ 外冷Outside cool☐

機床剛性Machine tool rigidity 高High☐ 一般Common ☐ 差Low☐

◇如果您已經有設計好的非標刀具圖紙，那麼僅提供刀具圖紙我們就可以爲您加工。
◇If you have detailed machining drawings, we can make the tool for you.
◇盡可能詳細的提供您需要定制刀具的相關資料，資料越詳細，定制的刀具將越合用。
◇Please try to provide more information for the tool. The tool will better suitable.
◇如果您還有其它要求請直接與我們的工程師溝通。
◇If you have other request, please contact with our engineers.

便捷式预检测刀摆仪

Portable Pre - detection Tool Run - out Tester





设备特点Equipment Features

1、提高加工质量。Improve machining quality.

2、提高加工效率。Enhance machining efficiency

3、降低刀具损耗。Reduce tool wear and tear.

4、提升加工安全性。Increase machining safety.

5、便于刀具管理。Facilitate tool management.

设备优势Equipment advantages

提高加工质量：Improve machining quality:

通过精确检测刀具的刀摆，即刀具的径向跳动和轴向跳动等参数，能及时发现刀具的偏差情况。这有助于在加工过程中及时调整刀具状态，避免因刀摆过大导致的加工表面粗糙度增加、尺寸精度偏差、形状误差等问题，从而显著提高加工零件的质量稳定性和一致性，降低次品率。

By accurately detecting the tool run - out of cutting tools, including parameters such as radial run - out and axial run - out, the deviation of the tool can be promptly identified. This is conducive to timely adjusting the tool state during the machining process, avoiding issues such as increased surface roughness, dimensional accuracy deviation, and shape error of the machined surface caused by excessive tool run - out. As a result, it significantly enhances the quality stability and consistency of machined parts, and reduces the defective product rate.

提高加工效率：Enhance machining efficiency:

一旦刀具出现刀摆问题，会影响加工的顺利进行，可能导致频繁换刀、停机调整等情况，严重降低加工效率。而刀摆检测仪可实时监测刀具状态，提前发现问题并采取措施，避免因刀摆问题引发的加工中断，保证加工的连续性，有效提高加工效率，尤其在大规模生产或高精度加工任务中优势更为明显。

Once there is a tool run - out problem, it will affect the smooth progress of machining. It may lead to frequent tool changes, machine stoppages for adjustment, etc., seriously reducing the machining efficiency. However, the tool run - out detector can monitor the tool state in real - time, detect problems in advance and take measures to avoid machining interruptions caused by tool run - out issues. This ensures the continuity of machining and effectively improves the machining efficiency. This advantage is particularly evident in large - scale production or high - precision machining tasks.

降低刀具损耗：Reduce tool wear:

过大的刀摆会加剧刀具与工件之间的摩擦和磨损，加快刀具的磨损速度，增加刀具更换频率和成本。刀摆检测仪能精准定位刀摆问题，使操作人员可以根据检测结果对刀具进行合理的修整或更换，延长刀具的使用寿命，降低刀具采购和更换成本，为企业节省开支。

Excessive tool run - out will intensify the friction and wear between the tool and the workpiece, accelerate the wear rate of the tool, and increase the frequency of tool replacement and costs. The tool run - out detector can accurately locate the tool run - out problem, enabling operators to reasonably repair or replace the tool according to the detection results. This extends the service life of the tool, reduces the costs of tool procurement and replacement, and saves expenses for enterprises.

提升加工安全性：Increase machining safety:

当刀具刀摆过大时，在加工过程中可能会产生振动，不仅影响加工质量和效率，还可能对机床、刀具和工件造成损坏，甚至引发安全事故。刀摆检测仪可有效监测刀摆情况，及时发现并解决潜在的安全隐患，保障加工过程的安全可靠，保护机床设备和操作人员的安全。

When the tool run - out is excessive, vibrations may occur during the machining process. This not only affects the machining quality and efficiency but may also cause damage to the machine tool, cutting tool, and workpiece, and even lead to safety accidents. The tool run - out detector can effectively monitor the tool run - out situation, promptly detect and address potential safety hazards, ensuring the safety and reliability of the machining process, and protecting the machine tool equipment and the safety of operators.

规格表 SPECIFICATIONS

型号 Cat. No	输入电压 Input Voltage	输入电流 Input Current	包装尺寸 PackagingDimensions	重量 weight
T-BT30	12V	1A	29 × 27 × 30cm	11KG
T-BT40	12V	1A	29 × 27 × 30cm	11KG
T-BT50	12V	1A	29 × 27 × 30cm	11KG
T-ISO30	12V	1A	29 × 27 × 30cm	11KG
T-ISO40	12V	1A	29 × 27 × 30cm	11KG
T-ISO50	12V	1A	29 × 27 × 30cm	11KG
T-HSK50	12V	1A	29 × 27 × 30cm	11KG
T-HSK63	12V	1A	29 × 27 × 30cm	11KG

Thread Rolling Head 螺纹滚压座

Thread Rolling Attachment 螺纹夹压座

Knurling Tools 滚花工具





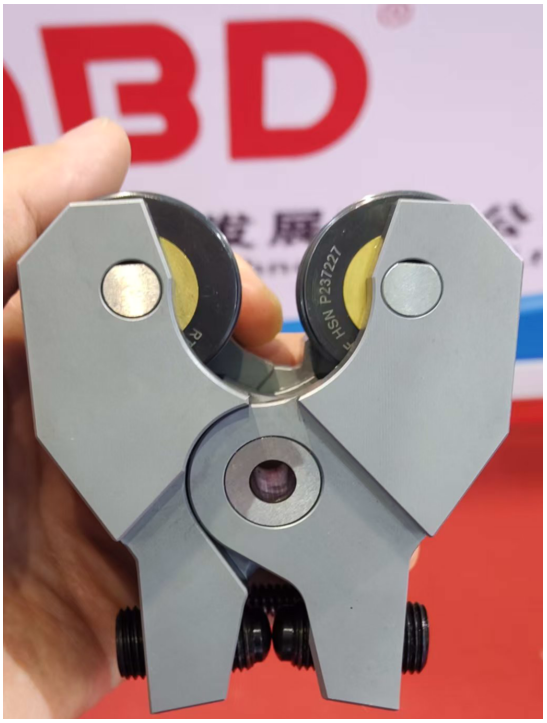

可加工螺纹种类

Types of Threads That Can Be Processed

基本上所有的螺纹都可以加工，包括特殊螺纹。同时滚压座还可以用来做挤光加工以及滚花加工。

Basically, all types of threads can be processed, including special threads.At the same time, the rolling seat can also be used for burnishing and knurling.

三角螺纹triangular thread

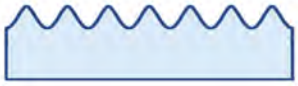

T 型螺纹T-thread



半圆形螺纹half-round thread



锯齿螺纹buttress thread



锥度螺纹taper thread



圆螺纹round thread



滚花加工Knurling

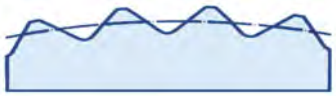

可加滚压材料 Materials applicable to rolling

滚压过程中材料在压力下会发生塑性变形。

During the rolling process, the material undergoes plastic deformation under pressure.

滚压对原材料延伸率有要求，延伸率不能低于 5%。

Rolling has a requirement for the elongation of raw materials, and the elongation shall not be less than 5%.

延伸率低于 5%的材料（如铸铁、硬黄铜及其它硬化材料）不适合滚压 。

Materials with an elongation rate of less than 5% (such as cast iron, hard brass and other hardened materials) are not suitable for rolling.

可使用机床

Machines that can be used

- 数控机床CNC Machine Tool
- 多轴自动车床Multi-spindle Automatic Lathe
- 加工中心Machining Center
- 刀塔机床Turret Machine Tool
- 螺纹专机Thread Special Machine
- 普通机床General Machine Tool

轴向螺纹轧制头和外形尺寸 Axial thread rolling head and external dimensions

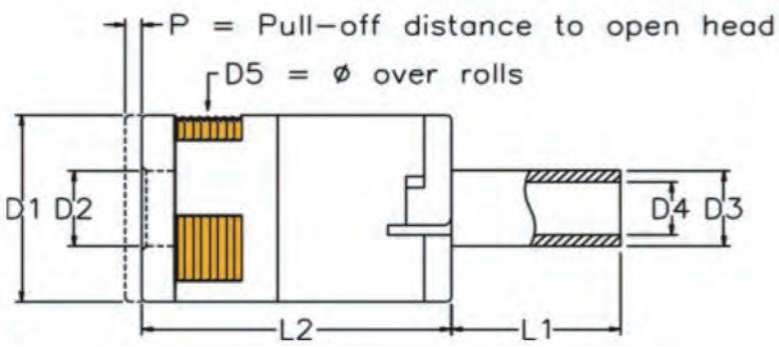

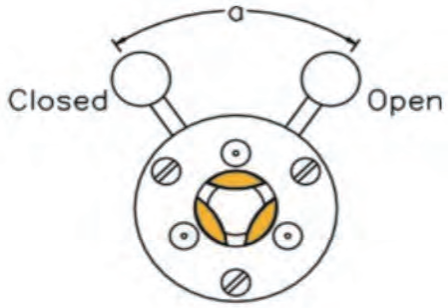

型号	螺旋升角范围	单位	D1	D2	D3	D4	D5	L1	L2	P	a	重量 (kg)
A-001	2°25′-5°12′	mm	40	7	16/20	7.5	N/A	25	40	1.5	32	0.3
A-01	2°5′-4°33′	mm	40	12	16/20	7.5	N/A	24	43.5	1.5	32	0.34
A-1	2°5′-4°33′	mm	64	17	20	11	70	60	50	2	60	0.85
A-12	1°5′-2°23′	mm	64	20	20	11	70	60	50	2	60	0.85
A-2	1°50′-4°15′	mm	88	24	25	17	93.5	76	69	3	60	2
A-23	0°50′-2°	mm	88	28	25	17	93.5	76	69	3	60	2
A-233400	0°45′-1°40′	mm	96	39	25/30	14	115	60	82.5	3	30	2.9
A-3	1°35′-3°30′	mm	117	38	32/40	22	131	89	83	4	60	4
A-34	0°45′-1°40′	mm	117	44	32/40	22	128	89	83.5	4	60	4
A-4	1°30′-3°10′	mm	165	46	40/50	28/32	162	75	156	4	30	12
A-45	0°40′-1°40′	mm	165	48	40/50	28/32	161	75	158	4	30	12
A-5	1°30′-3°	mm	200	55	50/70	32/40	204	95	174	5	30	25
A-56	0°35′-1°25′	mm	200	58	50/70	32/40	204	95	168	6	30	25

规格	公制螺纹	UNF	UNC	BSP	BSW	BSF
A-001	M2.6-M4.5	Nr.4-Nr.6	Nr.4-Nr.8		1/8-5/32	
A-01	M4.0-M6.0	Nr.6-Nr.12	Nr.8-Nr.12		5/32-7/32	3/16-1/4
A-1	M6.0-M10.0	1/4-3/8	1/4-7/16		1/4-3/8	1/4-7/16
A-12	M6.0-M12.0	1/4-1/2	1/4-1/2	G1/8-G1/4	1/4-1/2	1/4-1/2
A-2	M8.0-M16.0	5/16-1/2	1/2-5/8	G1/8-G3/8	5/16-5/8	5/16-5/8
A-23	M8.0-M22.0	5/16-3/4	5/16-3/4	G1/8-G1/2	5/16-3/4	5/16-3/4
A-233400	M16.0-M36.0	3/4-1.7/16	3/4-1.7/16	G3/8-G1	3/4-1.7/16	3/4-1.7/16
A-3	M12.0-M22.0	3/16-5/8	7/16-7/8	G1/4-G1/2	7/16-15/16	7/16-15/16
A-34	M12.0-M30.0	9/16-1.1/8	9/16-1.1/8	G3/8-G7/8	9/16-1.1/8	9/16-1.1/8
A-4	M14.0-M30.0	9/16-1	9/16-1.1/8	G3/8-G5/8	9/16-1.1/8	9/16-1.1/8
A-45	M18.0-M42.0	3/4-1.9/16	3/4-1.9/16	G3/8-G1.1/4	3/4-1.9/16	3/4-1.9/16
A-5	M18.0-M39.0	3/4-1.1/2	3/4-1.1/2	G1/2-G5/8	3/4-1.1/2	3/4-1.1/2
A-56	M22.0-M52.0	7/8-2.1/8	7/8-2.1/8	G3/8-G1.3/4	7/8-2.1/8	7/8-2.1/8

工件照片 Photos of the workpiece after production



加工图片 Pictures of the product in use

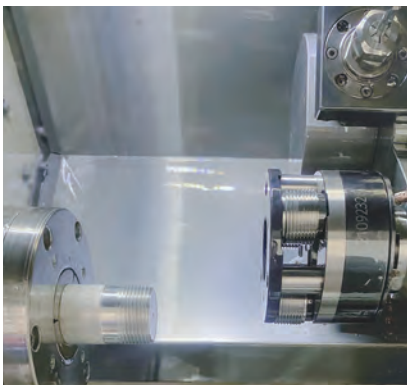

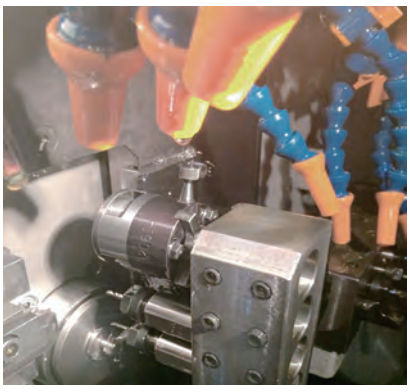

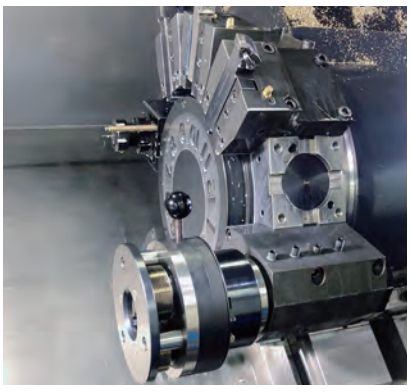

切向螺纹轧制头 Tangential thread rolling head

和螺纹滚压座具有相同的加工工艺及加工效果。可加工没有退刀槽及较短的螺纹。可以同时加工两个相近的短螺纹。

It has the same processing technology and processing effect as the thread rolling seat. It can machine threads without relief grooves and short threads. It can machine two adjacent short threads simultaneously.



型号	加工螺纹直径范围	最大加工螺纹长度
RT-10	1.6-14	15.5
RT-20	2-30	21.5
RT-30	2-42	31.0

部分组件展示图 Photos of the workpiece after production



加工示意图 Pictures of the product in use

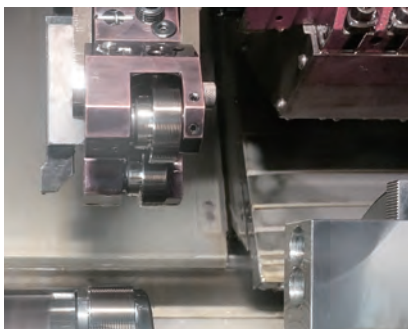

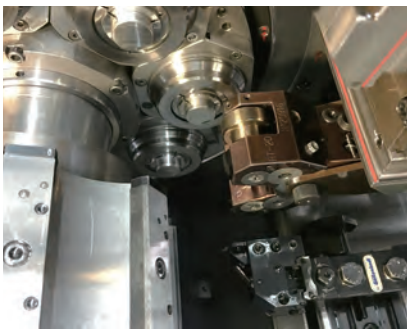

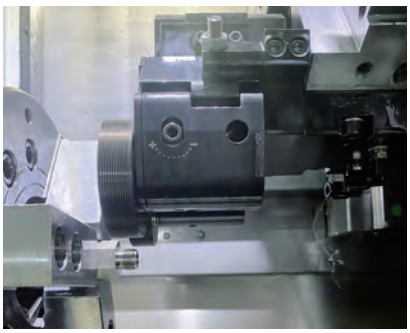

FT滚花工具 FT knurling tool



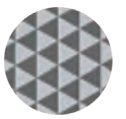









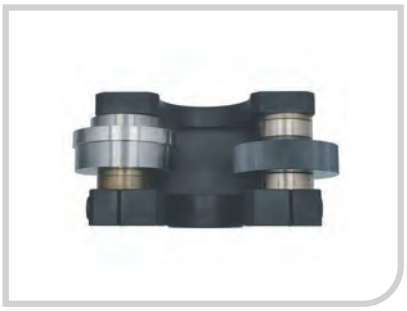

FT 切向刀具是 NBD 系列刀具中的 “滚花专业能手”，其特点是具备出色的成本效益。

The FT tangential tool is a "knurling expert" in the NBD series of tools, and is characterized by excellent cost-effectiveness.

FT 滚花刀具能够以省时高效的方式，滚压出型材、平行凹槽、滚花图案以及凸纹。

在加工时 —— 优先适用于单轴及多轴车床 —— 工件需保持旋转状态，而刀具本身则固定不动。

The FT knurling tool can roll profiles, parallel grooves, knurled patterns, and ribs in a time - saving and efficient manner.

During processing - which is preferably applied to single - spindle and multi - spindle lathes - the workpiece needs to be kept rotating while the tool itself remains stationary.

类型	加工范围		滚轮宽度		近似尺寸			重量（kg）	
	毫米	英寸	毫米	英寸	高度	宽度	深度	滚轮刀具	刀座
FT 10	3-18	0.118-0.709	20	0.787	80	103	53	1.9	2-3
FT 18	14-36	0.551-1.417	40	1.575	114	140	75	5.9	3-5
FT 24	18-40	0.709-1575	43.9	1.728	115	147	79	6.1	3-5

带前置滚轮切向螺纹滚压系统

Tangential thread rolling system with front-mounted roller







适用于不锈钢管件等产品的加工

可实现极高的螺纹质量

工作范围：公制螺纹 M3 至 M42 /

美制统一螺纹 UN 5-40 至 UN 1 5/8 英寸是应对复杂工件几何形状和特殊工件装夹问题的解决方案

Suitable for the processing of products such as stainless steel pipe fittings.

It can achieve extremely high thread quality.

Working range: Metric threads from M3 to M42 / Unified American threads from UN 5-40 to UN 1 5/8 inches.

It is a solution to deal with the problems of complex workpiece geometry and special workpiece clamping.

类型	标准螺纹		优质螺纹		螺纹长度最大值（减去 2 倍螺距）（毫米）	最大压力 [N]	重量（kg）	
	毫米	英寸	毫米	英寸			滚轮工具	适配器
FT13-OT	3-10	0.125-0.375	3-24	0.125-0.375	17	4000	4.5	2.0
FT 16-OT	8-16	0.315-0.625	8-42	0.315-1.625	20	4000	5.4	2.0

小型螺纹滚压工具 Miniature thread rolling tool

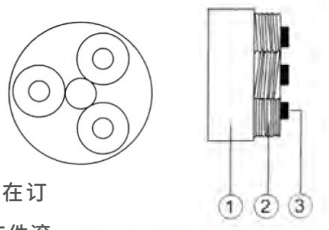

可以精确到0.01mm的螺纹公差 The thread tolerance can be accurate to 0.01mm.

这种只能微调的螺纹滚压轮直径是由零件螺纹的公差决定，所以螺纹的精度等级及材料都必须在订单中注明。此滚压板牙主要应用于钟表零件及微型工件的外螺纹加工，除滚牙外也可用于微型工件滚花加工。可加工公制英制及美标螺纹。

The diameter of this thread rolling wheel, which can only be fine-tuned, is determined by the tolerance of the part's thread. Therefore, the precision grade and material of the thread must be specified in the order. This rolling die is mainly used for the external thread processing of watch parts and miniature workpieces. Besides thread rolling, it can also be used for the knurling processing of miniature workpieces. It can process metric, imperial and American standard threads.



根据客户要求，我们可以定制滚牙轮及锁紧柱销。具体如图：

According to customers' requirements, we can customize thread rolling wheels and locking dowel pins. The details are shown in the figure as follows:

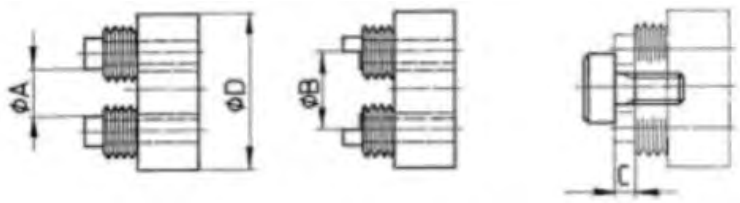

螺纹 * 螺距	ϕA	ϕB	C	可调 ϕD1	不可调 ϕD2
M 0.40×0.10	0.70	1.50	0.40	—	6
M 0.50×0.125	0.90	2.00	0.50	—	6
M 0.60×0.15	1.20	2.50	0.60	8	6
M 0.70×0.175	1.60	3.00	0.60	8	6
M 0.80×0.20	1.70	3.50	0.80	8	8
M 0.90×0.225	1.70	3.50	0.90	8	8
M 1.00×0.25	2.00	4.00	0.90	10	8
M 1.10×0.25	2.10	4.00	0.90	10	8
M 1.20×0.25	2.20	4.00	0.90	10	8
M 1.30×0.30	2.40	4.50	0.90	10	8/10
M 1.40×0.30	2.50	5.00	0.90	10	8/10
M 1.50×0.30	2.60	5.00	0.90	10	8/10
M 1.60×0.35	3.60	6.20	1.10	14	12
M 1.70×0.35	3.70	6.30	1.10	14	12
M 1.80×0.35	3.80	6.40	1.10	14	12
M 2.00×0.40	4.00	6.80	1.10	14	12
M 2.20×0.45	4.40	7.80	1.20	16	12/16
M 2.50×0.45	4.70	8.10	1.20	16	12/16
M 2.60×0.45	4.80	8.20	1.20	16	12/16
M 3.00×0.50 PM	5.10	8.50	1.30	16	12/16
M 3.00×0.50 GM	7.30	12.00	2.00	25	22
M 3.50×0.60	7.70	12.40	2.10	25	22
M 4.00×0.70	8.00	12.80	2.20	25	22
M 4.50×0.75	8.30	13.20	2.20	25	25
M 5.00×0.80	9.00	14.00	2.30	27	25
M 6.00x1.00	10.70	16.50	2.70	32	30
M 7.00x1.00	11.70	17.50	2.70	32	-
M 8.00x1.25	12.60	19.50	3.50	35	--

PRECISION TOOL

科技改变世界 创新引领未来

Technology Changes the World, Innovation Leadsthe Future.

北京双利丰科技发展有限公司

Beijing Shuangfengli Technology Co., Ltd.

北京市丰台区万兴路一号院

ADD: No.1 yard, Wanxing Road, Fengtai District, Beijing, China.

传真/电话 : 010-50903185 18600822588

Fax/Tel: +86 010-50903185 +8618600822588

邮箱: emilyu@bjslfkj.cn

E-mail: emilyu@bjslfkj.cn

网址: https://www.bjslfkj.cn

Web: https://www.bjslfkj.cn